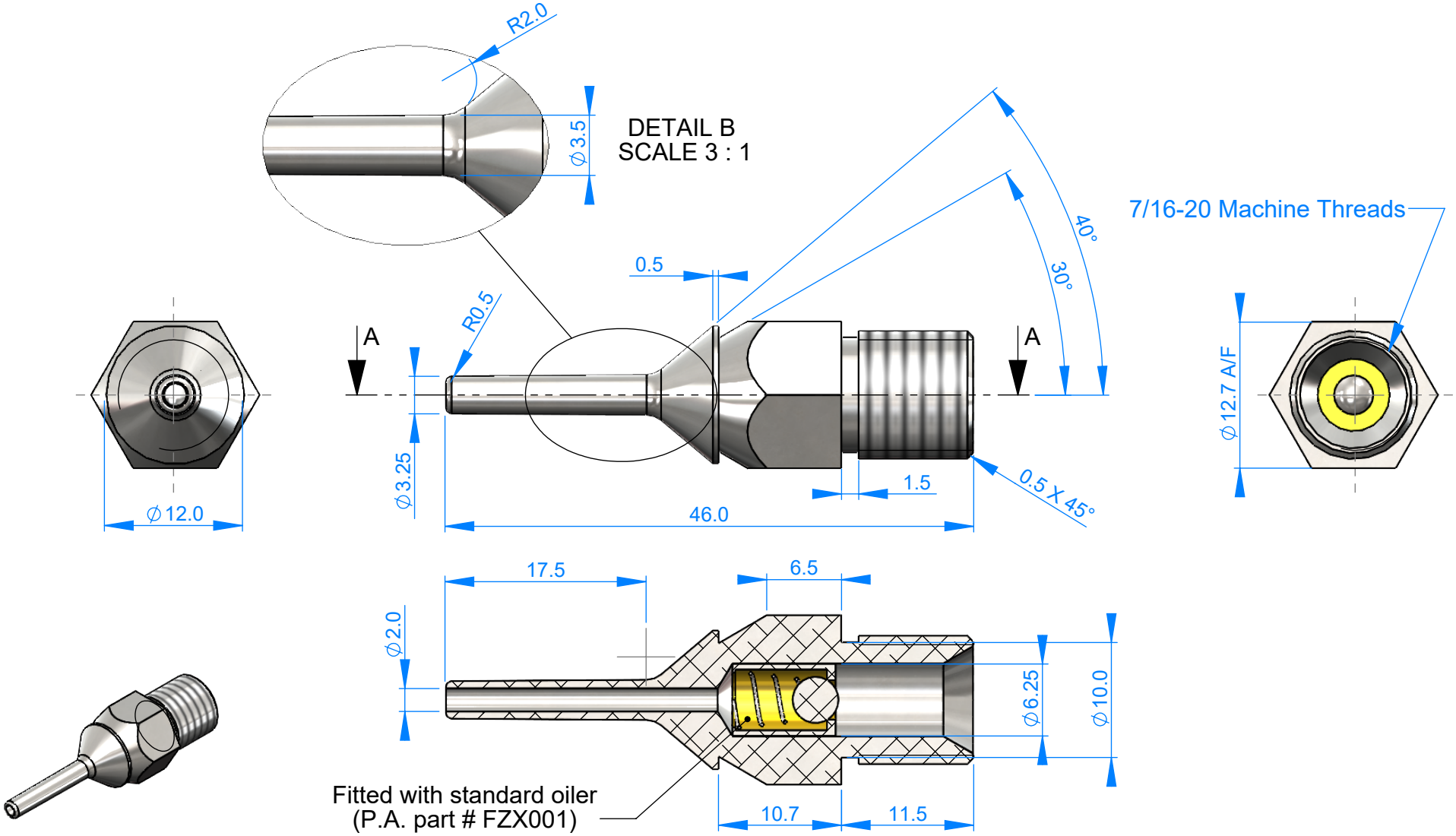


SECTION A-A

| | | | | | |
|---|---|---|---|---|---|
| MATERIAL | Aluminium | DRAWN | SteveE | DIMENSIONS ARE IN MM UNLESS OTHERWISE STATED THIRD ANGLE | TOLERANCES UNLESS OTHERWISE STATED WHOLE NUMBERS ±0.5mm 1 DECIMAL PLACE ±0.3mm 2 DECIMAL PLACE ±0.1mm | SCALE 2:1 |
| FINISH | Clean | DATE | 22/05/12 | | | SHEET 1 OF 1 |
| COLOUR | Natural | ECR No. | | | | |
| NOTES Weight: 6.18g | | | | TITLE Extension Nozzle Assy | | |
| | | | | DWG. No. A4 | MPN - MDJ021 | REVISION 01 |

THIS DRAWING AND THE INFORMATION IT CONTAINS IS THE PROPERTY OF POWER ADHESIVES AND IS CONFIDENTIAL. IT MUST NOT BE REPRODUCEDEITHER WHOLLY OR IN PART. ALL RIGHTS IN RESPECT OF PATENTS DESIGNS AND COPYRIGHTS ARE RESERVED.