Thermomagnetic device circuit breaker - CB TM2 3A F1 P - 2800893

Please be informed that the data shown in this PDF Document is generated from our Online Catalog. Please find the complete data in the user's documentation. Our General Terms of Use for Downloads are valid
(http://phoenixcontact.com/download)

Thermomagnetic device circuit breaker, 2-pos., tripping characteristic F1 (fast-blow), 2 PDT contacts, plug for base element.

Product Description

Thermomagnetic device circuit breaker

Key Commercial Data

Packing unit	1 pc
GTIN	4 046356 690546
GTIN	4046356690546
Weight per Piece (excluding packing)	70.500 g
Custom tariff number	85362010
Country of origin	Indonesia
Note	Made to Order (non-returnable)

Technical data

Dimensions

Height	45 mm
Width	24.6 mm
Depth	52 mm

Ambient conditions

Ambient temperature (operation)	-30 °C ... 60 °C
Ambient temperature (storage/transport)	-40 °C ... 80 °C
Humidity test	240 h, 95 % RH, 40 °C
Shock (operation)	15g (IEC 60068-2-27, Test Ea)
Vibration (operation)	5g (IEC 60068-2-6, Test Fc)
Degree of protection	IP30 (Actuation area)

General

Thermomagnetic device circuit breaker - CB TM2 3A F1 P - 2800893

Technical data

General

Installation instructions	When mounted in rows, the nominal device current can be limited to just 80% or must be overdimensioned accordingly.
Flammability rating according to UL 94	V-0
Mounting type	on base element
Color	gray
Number of positions	2
Insulating material group	II
Degree of pollution	2
Type	Male

Electrical data

Fuse type	F1 (fast blow)
Rated surge voltage	2.5 kV (Increased insulation in actuation area)
Rated voltage	80 V DC (IEC 60934)
	80 V DC (UL 1077)
	80 V DC (UL 508 - with plug-in base)
Rated current I_N	3 A (IEC 60934)
	inductive load according to UL 1077
	3 A DC (low-induction load according to UL 1077)
	3 A DC (inductive load according to UL 508 - with plug-in base)
	3 A DC (low-induction load according to UL 508 - with plug-in base)
Rated insulation voltage U_i	277 V AC (UL 1077)
	250 V AC (IEC 60934)
Power dissipation	1.26 W (in nominal operation per channel)
Device resistance	140 mΩ
Insulation resistance R_{iso}	> 100 MΩ (500 V DC)
Type of actuation	S type
Tripping method	TM (thermomagnetic)
Tripping level	Trip-free mechanism (positive)
	600 A (80 V DC)
Required backup fuse	≥ 15 A ($I > I_{cn}$)
Short-circuit switching capacity	1000 A AC (277 V AC)
	1000 A DC (50 V DC)
Dielectric strength	3000 V AC (Actuation area)
	1500 V AC (Main to auxiliary circuit)
	1500 V AC (Open main circuit)
	1000 V AC (Open auxiliary circuit)
	1500 V AC (Position to position)
Voltage drop	0.42 V (at 1 x I_n)
Switching cycles, max.	6000 (240 V AC/1 x I_n)
	3000 (80 V DC/1 x I_n)

Thermomagnetic device circuit breaker - CB TM2 3A F1 P - 2800893

Technical data

Electrical data

Auxiliary circuit	277 V AC / 0.5 A (Low-induction)
	277 V AC / 1 A (Low-induction, maximum of 2000 cycles)
	50 V DC / 1 A (Low-induction)
Minimum auxiliary contact operating voltage	10 V
Maximum auxiliary contact operating voltage	240 V
	240 V
Minimum auxiliary contact operating current	10 mA
Maximum auxiliary contact operating current	1 A

Standards and Regulations

Standards/specifications	EN 60934

Conformance/approvals

Designation	UL approval
Identification	UL Listed UL 508
	UL/C-UL Recognized UL 1077
Designation	CSA
Identification	CSA CAN/CSA-C22.2 No. 235-04
Designation	Shipbuilding approval
Identification	DNV GL

Environmental Product Compliance

REACh SVHC	Lead 7439-92-1
China RoHS	Environmentally Friendly Use Period = 50 years
	For details about hazardous substances go to tab “Downloads”, Category “Manufacturer's declaration”

Drawings

Thermomagnetic device circuit breaker - CB TM2 3A F1 P - 2800893

Application drawing

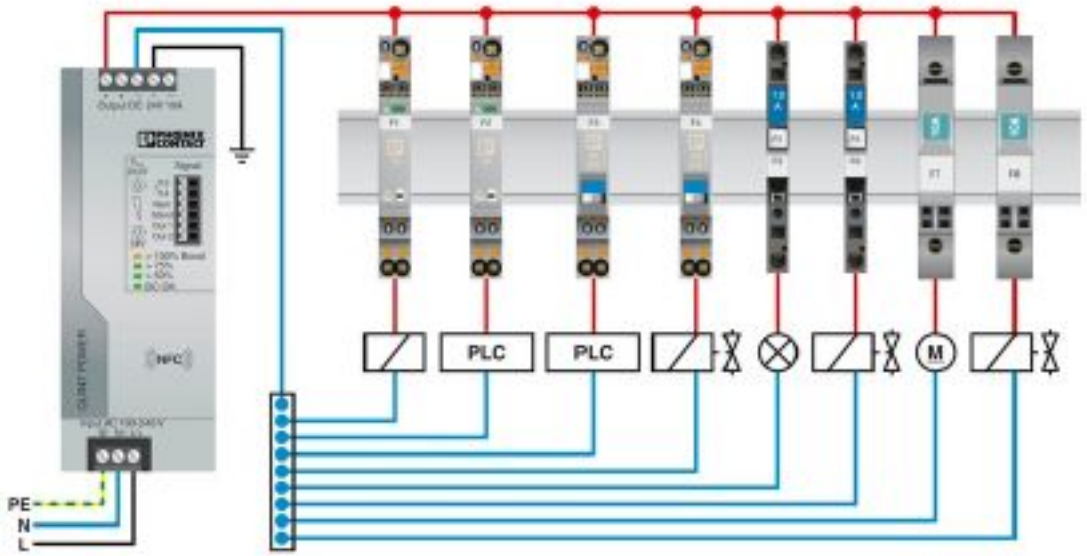

The figure shows the single-position versions

Application drawing

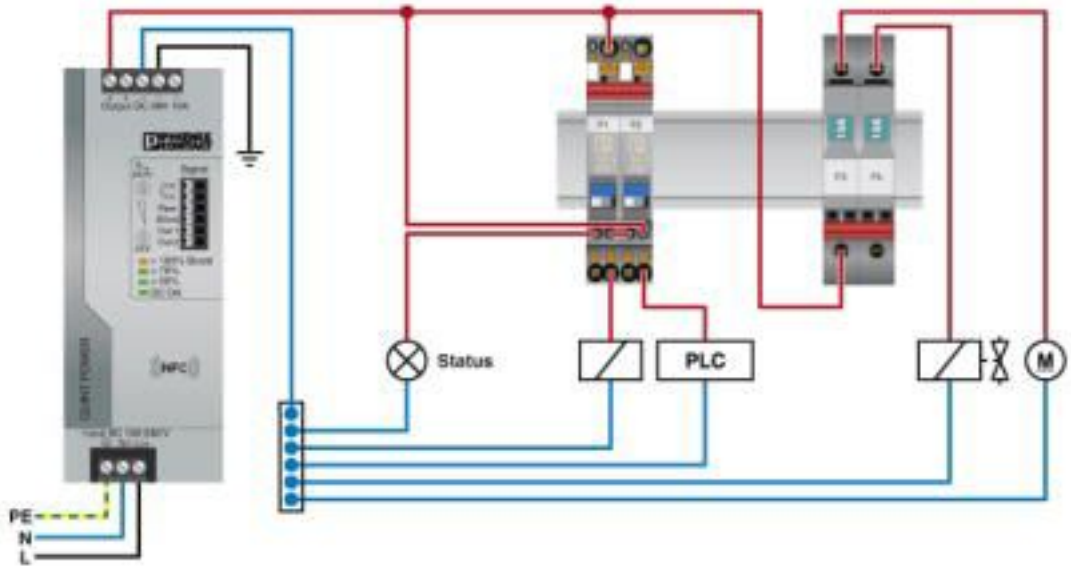

Thermomagnetic device circuit breaker - CB TM2 3A F1 P - 2800893

Diagram

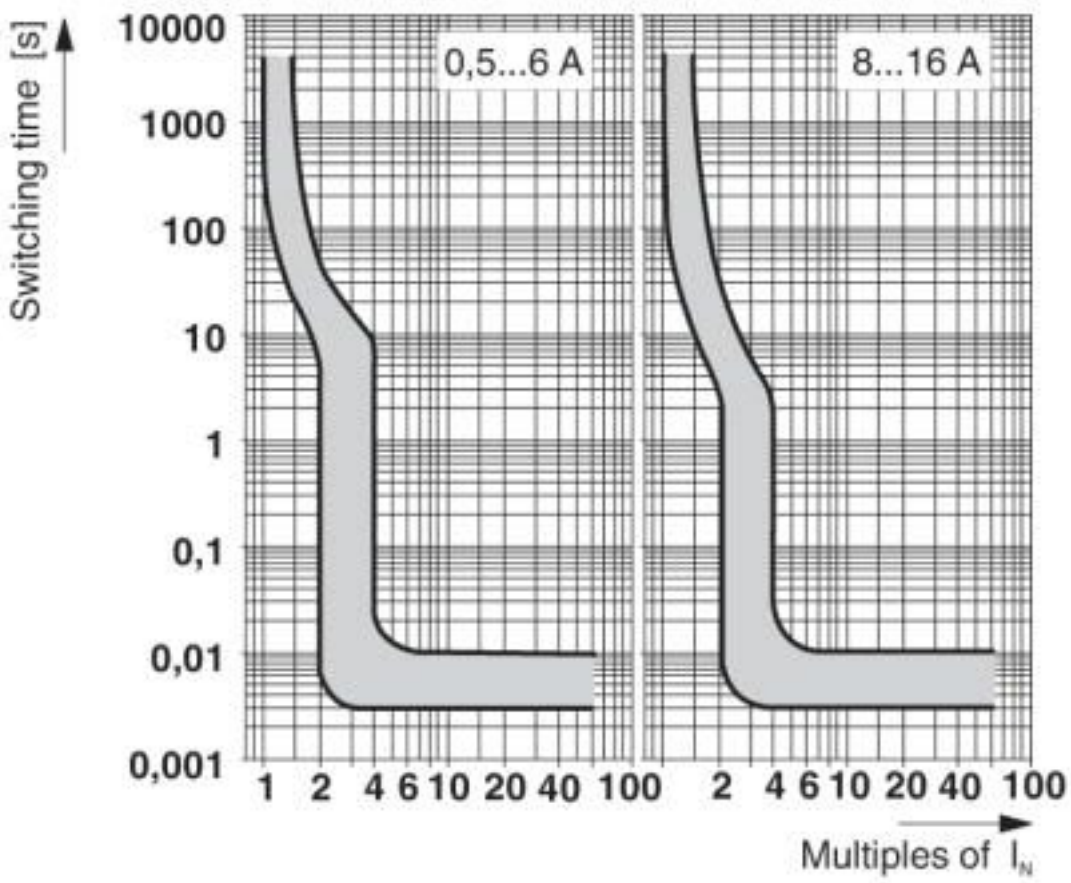

Trigger characteristic in the DC range

Thermomagnetic device circuit breaker - CB TM2 3A F1 P - 2800893

Dimensional drawing

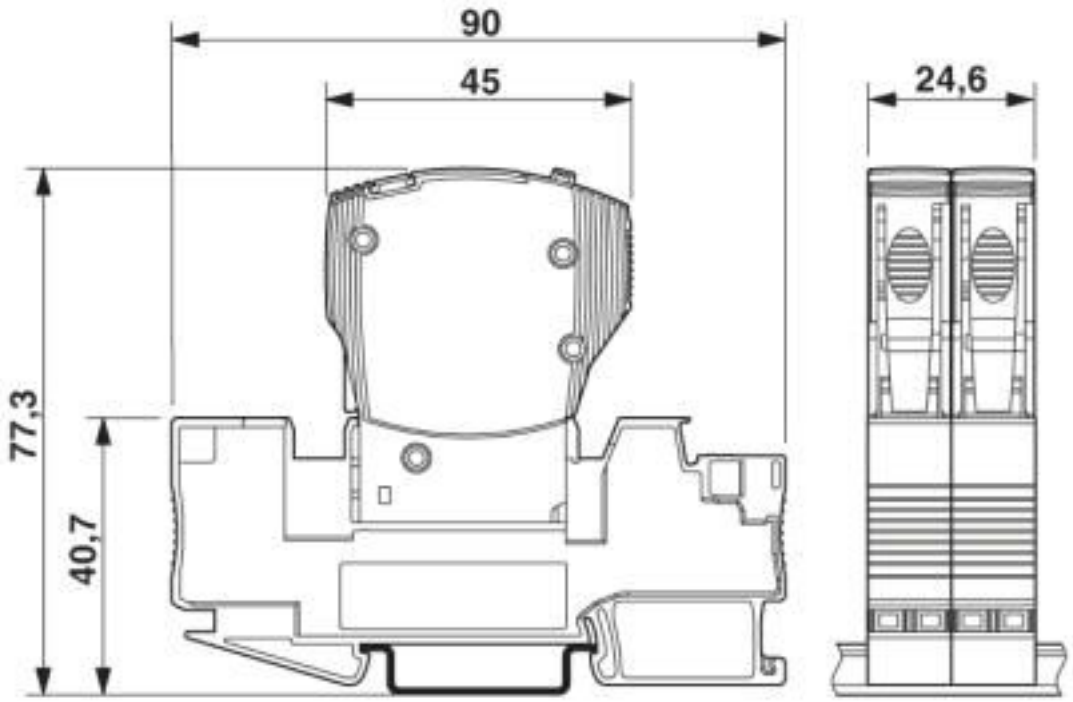

The figure shows the complete module consisting of a base element and connector

Classifications

eCl@ss

eCl@ss 10.0.1	27141116
eCl@ss 4.0	27141100
eCl@ss 4.1	27141100
eCl@ss 5.0	27141100
eCl@ss 5.1	27141100
eCl@ss 6.0	27141100
eCl@ss 7.0	27141116
eCl@ss 8.0	27141116
eCl@ss 9.0	27141116

ETIM

ETIM 3.0	EC000899
ETIM 4.0	EC000899
ETIM 5.0	EC000899
ETIM 6.0	EC000899
ETIM 7.0	EC000899

UNSPSC

UNSPSC 6.01	30211812

Thermomagnetic device circuit breaker - CB TM2 3A F1 P - 2800893

Classifications

UNSPSC

UNSPSC 7.0901	39121411
UNSPSC 11	39121411
UNSPSC 12.01	39121411
UNSPSC 13.2	39121410
UNSPSC 18.0	39121410
UNSPSC 19.0	39121410
UNSPSC 20.0	39121410
UNSPSC 21.0	39121410

Approvals

Approvals

Approvals

CSA / UL Recognized / cUL Recognized / VDE Zeichengenehmigung / EAC / KC / DNV GL / CCC / cULus Recognized

Ex Approvals

Approval details

CSA		http://www.csagroup.org/services-industries/product-listing/	2786957
UL Recognized		http://database.ul.com/cgi-bin/XYV/template/LISEXT/1FRAME/index.htm	FILE E 140459
cUL Recognized		http://database.ul.com/cgi-bin/XYV/template/LISEXT/1FRAME/index.htm	FILE E 140459
VDE Zeichengenehmigung		http://www2.vde.com/de/Institut/Online-Service/VDE-gepruefteProdukte/Seiten/Online-Suche.aspx	40034683
EAC			RU C-DE.*09.B.00169

Thermomagnetic device circuit breaker - CB TM2 3A F1 P - 2800893

Approvals

KC		http://eng.kcc.go.kr/user/ehpMain.do	SW05012-15006
DNV GL		https://approvalfinder.dnvgl.com/	TAE00003C7
CCC			2019010307158887
cULus Recognized			

Accessories

Accessories

Bridge

Jumper - CB PT BRIDGE - 2801014

Bridge plug for bridging contacts 1 to 2 for CB base elements

---

Jumper - CB RC BRIDGE - 2801616

Bridge plug for bridging contacts 11 to 14 for CB base elements

---

Cutting tools

Front cutter - CUTFOX-FBS - 1212124

Cutting tool, for separating individual jumper bars from FBS ... plug-in bridges and EB ... insertion bridges

Thermomagnetic device circuit breaker - CB TM2 3A F1 P - 2800893

Accessories

Jumper

Plug-in bridge - FBS 2-6 - 3030336

Plug-in bridge, pitch: 6.2 mm, width: 10.7 mm, number of positions: 2, color: red

Plug-in bridge - FBS 3-6 - 3030242

Plug-in bridge, pitch: 6.2 mm, width: 16.9 mm, number of positions: 3, color: red

Plug-in bridge - FBS 4-6 - 3030255

Plug-in bridge, pitch: 6.2 mm, width: 23.1 mm, number of positions: 4, color: red

Plug-in bridge - FBS 5-6 - 3030349

Plug-in bridge, pitch: 6.2 mm, width: 29.3 mm, number of positions: 5, color: red

Plug-in bridge - FBS 10-6 - 3030271

Plug-in bridge, pitch: 6.2 mm, width: 60.3 mm, number of positions: 10, color: red

Thermomagnetic device circuit breaker - CB TM2 3A F1 P - 2800893

Accessories

Plug-in bridge - FBS 20-6 - 3030365

Plug-in bridge, pitch: 6.2 mm, width: 122.3 mm, number of positions: 20, color: red

---

Plug-in bridge - FBS 50-6 - 3032224

Plug-in bridge, pitch: 6.2 mm, width: 308.3 mm, number of positions: 50, color: red

---

Labeled terminal marker

Zack Marker strip, flat - ZBF 12 CUS - 0825018

Zack Marker strip, flat, can be ordered: Strip, white, labeled according to customer specifications, mounting type: snap into flat marker groove, for terminal block width: 12 mm, lettering field size: 5.15 x 12.15 mm, Number of individual labels: 5

Terminal marking

Zack Marker strip, flat - ZBF 12:UNBEDRUCKT - 0809735

Zack Marker strip, flat, Strip, white, unlabeled, can be labeled with: PLOTMARK, CMS-P1-PLOTTER, mounting type: snap into flat marker groove, for terminal block width: 12 mm, lettering field size: 5.15 x 12.15 mm, Number of individual labels: 5

Necessary add-on products

Base element - CB 1/6-2/4 PT-BE - 2800929

Base element with push-in connection technology for CB ... device circuit breakers

---

Thermomagnetic device circuit breaker - CB TM2 3A F1 P - 2800893

Accessories

Base element - CB 1/10-1/10 UT-BE - 2801305

Base element with screw connection technology for CB... device circuit breakers

Phoenix Contact 2020 © - all rights reserved
http://www.phoenixcontact.com