To request the full datasheet, please visit www.intersil.com/products/ISL88750

Narrow VDC (NVDC) Battery Charger with SMBus Interface

ISL88750

The ISL88750 is a highly versatile Narrow VDC (NVDC) battery charger, supporting 2-, 3- or 4-cell batteries. It allows the battery to work with the adapter together to supply the system load when it exceeds the adapter capability, referred to as system Turbo mode. ISL88750 quickly turns on BGATE to enable the battery to help the adapter provide the system power in Turbo mode.

The ISL88750 uses N-channel MOSFETs (NFETs) for all the switches to achieve the best performance and lowest BOM cost. The internal charge pump is capable of turning on all the NFETs fast or slow depending on the circumstance or the need. The ability to quickly turn on NFETs prevents system bus voltage drop when the battery is suddenly removed in Turbo mode or in Battery Learn mode.

The ISL88750 features hardware based adapter current limit and battery-current limit in addition to SMBus programmable limits.

The ISL88750 provides a high accuracy adapter current monitor and battery discharging current monitor outputs. To provide maximum flexibility for working with high power and low power systems, it provides several configurable current-sense resistor value options to achieve the best trade-off of current sensing accuracy vs power loss.

The ISL88750 uses the Intersil patented Robust Ripple Regulator (R3™) modulation scheme to provide excellent light-load efficiency and fast dynamic response. It is available in a 32 Ld 4x4mm^2 QFN package.

Features

- Adapter current monitor and battery discharging current monitor
- Uses NFET for all the switches
  - Supports removal of battery during Battery Learn mode
  - Actively controlled inrush current to prevent FET damage
- SMBus programmable settings and high accuracy
- Comprehensive protection features include
  - Hardware-based adapter current and battery current limits
  - Supports sudden removal of battery in system Turbo mode
- 16 switching frequency options from 350kHz to 1MHz
- Low quiescent current
- SMBus and auto-increment I^{2}C compatible
- Intersil Robust Ripple Regulator (R3™) modulation scheme provides excellent light-load efficiency and fast dynamic response
- 32 Ld 4x4mm^2 QFN package
- Pb-free (RoHS compliant)

Applications

- Devices with rechargeable 2-, 3- or 4-cell batteries

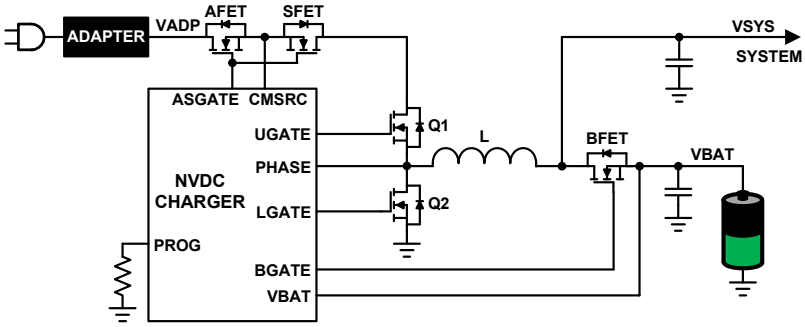

FIGURE 1. TYPICAL CONFIGURATION

CAUTION: These devices are sensitive to electrostatic discharge; follow proper IC Handling Procedures.
1-888-INTERSIL or 1-888-468-3774 | Copyright Intersil Americas LLC 2016. All Rights Reserved
Intersil (and design) and R3 technology are trademarks owned by Intersil Corporation or one of its subsidiaries.
All other trademarks mentioned are the property of their respective owners.

For additional products, see www.intersil.com/en/products.html

Intersil products are manufactured, assembled and tested utilizing ISO9001 quality systems as noted in the quality certifications found at www.intersil.com/en/support/qualandreliability.html

Intersil products are sold by description only. Intersil Corporation reserves the right to make changes in circuit design, software and/or specifications at any time without notice. Accordingly, the reader is cautioned to verify that data sheets are current before placing orders. Information furnished by Intersil is believed to be accurate and reliable. However, no responsibility is assumed by Intersil or its subsidiaries for its use; nor for any infringements of patents or other rights of third parties which may result from its use. No license is granted by implication or otherwise under any patent or patent rights of Intersil or its subsidiaries.

For information regarding Intersil Corporation and its products, see www.intersil.com