Migration Guide

Allen-Bradley

Pico and PicoGFX Controllers to Micro800 Controllers

Allen-Bradley • Rockwell Software

Rockwell Automation

Important User Information

Solid-state equipment has operational characteristics differing from those of electromechanical equipment. Safety Guidelines for the Application, Installation and Maintenance of Solid State Controls (publication SGI-1.1 available from your local Rockwell Automation® sales office or online at http://www.rockwellautomation.com/literature/) describes some important differences between solid-state equipment and hard-wired electromechanical devices. Because of this difference, and also because of the wide variety of uses for solid-state equipment, all persons responsible for applying this equipment must satisfy themselves that each intended application of this equipment is acceptable.

In no event will Rockwell Automation, Inc. be responsible or liable for indirect or consequential damages resulting from the use or application of this equipment.

The examples and diagrams in this manual are included solely for illustrative purposes. Because of the many variables and requirements associated with any particular installation, Rockwell Automation, Inc. cannot assume responsibility or liability for actual use based on the examples and diagrams.

No patent liability is assumed by Rockwell Automation, Inc. with respect to use of information, circuits, equipment, or software described in this manual.

Reproduction of the contents of this manual, in whole or in part, without written permission of Rockwell Automation, Inc., is prohibited.

Throughout this manual, when necessary, we use notes to make you aware of safety considerations.

	**WARNING:** Identifies information about practices or circumstances that can cause an explosion in a hazardous environment, which may lead to personal injury or death, property damage, or economic loss.
	**ATTENTION:** Identifies information about practices or circumstances that can lead to personal injury or death, property damage, or economic loss. Attentions help you identify a hazard, avoid a hazard, and recognize the consequence.
	**SHOCK HAZARD:** Labels may be on or inside the equipment, for example, a drive or motor, to alert people that dangerous voltage may be present.
	**BURN HAZARD:** Labels may be on or inside the equipment, for example, a drive or motor, to alert people that surfaces may reach dangerous temperatures.
IMPORTANT	Identifies information that is critical for successful application and understanding of the product.

Notes:

About this Publication

This document serves as a guide for replacing your existing Pico™ controller with a suitable Micro810®, Micro820™, or Micro830® controller. Micro810, Micro820, and Micro830 controllers are included in the Micro800® family of controllers.

Audience

This document is intended for users of Pico controllers who are converting to a Micro810, Micro820, or Micro830 controller, and who are familiar with the PicoSoft software. Knowledge of programming in ladder language is expected to be able to program Micro800 systems effectively.

Required Software

Connected Components Workbench™ software is the main programming software for Micro800 systems. It provides a choice of IEC 61131-3 programming languages (ladder diagram, function block diagram, structured text) with user-defined function block support that optimizes machine control.

You will need the Connected Components Workbench software to write your ladder diagram, function block diagram, or structured text programs, to execute the programs, and to see the results.

Additional Resources

These documents contain additional information concerning related products from Rockwell Automation.

Resource	Description
Micro800 Programmable Controllers General Instructions, publication 2080-RM001	Provides reference information about the instruction set available for developing programs for use in Micro800 Control systems.
Micro810 Programmable Controllers User Manual, publication 2080-UM001	A more detailed description of how to install and use your Micro810 programmable controllers.
Micro820 Programmable Controllers User Manual, publication 2080-UM005	A more detailed description of how to install and use your Micro820 programmable controllers.
Micro830 and Micro850 Programmable Controllers User Manual, publication 2080-UM002	A more detailed description of how to install and use your Micro830 and Micro850 programmable controllers.
Micro800 Plug-in Modules User Manual, publication 2080-UM004	Description of features, installation, wiring, and specifications for the Micro800 plug-in modules.
Micro800 and Connected Components Workbench Getting Started Guide, publication 2080-QR001	Provides information about basic Micro800 programmable controllers and Connected Component Workbench functions.
Micro800 and Connected Components Workbench Application Guide, publication 2080-QR002	Provides information about Micro800 programmable controllers and Connected Component Workbench functions.
Micro800 DeviceNet Popular Configuration Drawing, publication CCSIMP-QR001	Provides information about the mechanical layout of Micro800 and DeviceNet.
Industrial Automation Wiring and Grounding Guidelines, publication 1770-4.1	More information on proper wiring and grounding techniques.

You can view or download publications at http:/www.rockwellautomation.com/literature/. To order paper copies of technical documentation, contact your local Allen-Bradley distributor or Rockwell Automation sales representative.

Micro800 Controller Overview

Micro800 controllers are designed for low-cost, standalone machines. These economical small-size programmable logic controllers (PLCs) are available in different form factors based on the number of I/O points embedded in the base, with a range of features intended to address different requirements.

The Micro800 family shares programming environment, accessories, and plug-ins that allow machine builders to personalize the controller for specific capabilities.

Micro810 controllers function as a smart relay with high current relay outputs, but with the programming capabilities of a micro PLC. The Micro810 controllers come in a 12-point form factor.

Micro820 controllers are specifically designed for smaller standalone machines and remote automation projects. They have embedded Ethernet and serial ports and microSD slots for data logging and recipe management. These controllers come as 20-point form factors that can accommodate up to two plug-in modules. They also support the Micro800 Remote LCD (2080-REMLCD) module for easier configuration of settings such as IP address. The Remote LCD module can also function as a simple IP65 text display.

Micro830 controllers are designed for standalone machine control applications. They have flexible communications and I/O capabilities with up to five plug-ins. They come as a 10-, 16-, 24-, or 48-point form factors.

Micro850® expandable controllers are designed for applications that require more digital and analog I/O or higher performance analog I/O. They can support up to four expansion I/O. Micro850 controllers include additional communication connection options through an embedded 10/100 Base-T Ethernet port.

Several Micro830 and Micro850 controllers support basic positioning through embedded pulse train outputs (PTO).

These controllers also allow you to configure up to six high speed counters (HSC), and choose from nine HSC operation modes. HSC is supported on all Micro830 and Micro850 modules, except on the 2080-LCxx-xxAWB module. PTO is only supported on Micro830 and Micro850 catalog numbers that end in BB or VB, for example the 2080-LCxxxxxx catalog number.

Feature and Specification Comparison

When selecting a Micro800 controller to replace your Pico application, consider the differences in features and specifications between Pico/PicoGFX controllers and Micro800 controllers. You can refer to the following table to compare the features and specifications.

Table 1 - Features and Specifications of Pico/PicoGFX controllers and Micro800 controllers

	Pico		**Micro800**		
Attribute	**Pico**	**Pico GFX-70**	**Micro810**	**Micro820**	**Micro830**
Operating power					
120/240V AC	Yes	Yes	Yes	With power supply module, 2080-PS120-240VAC	
24V DC	Yes	Yes	Yes		
24V AC	Yes	No	Yes	No	
12V DC	Yes	No	Yes	No	
HMI					
LCD Display	Yes	Yes	2080-LCD	2080-REMLCD(1)	2711R-T4T(2)
I/O					
Embedded Digital I/O, Max	20	16	12	19	48
Digital I/O, Max	40	36, 272 (with Pico-Link)	N/A	35, 320 (with 2080-DNET)	88, 320 (with 2080-DNET)
Digital Input Types	120V AC 24V DC 12V DC 24V AC or 24V DC	120V AC 24V DC	120V AC 12V DC 24V AC or 24V DC	120V AC 24V AC or 24V DC	120V AC 24V AC or 24V DC
Digital output types	24V DC transistor, relay	24V DC transistor, relay	24V DC transistor, relay		
Analog input types	0...10V	0...10V	4 x 0...10V (shared inputs)	4 x 0...10V (shared inputs)/ with Plug-in modules	With Plug-in modules
Analog output types	N/A	0...10V	N/A	1 x 0…10V output/ With plug-in modules	With Plug-in modules
Real Time Clock	Yes	Yes	Yes	Yes	2080-MEMBAK-RTC
Operating Temp	-25…55 °C (-13…131 °F)		0...55 °C	-20…65 °C (-4…149 °F)	
Programming					
Keypad	Yes	No	Yes (Smart Relay Function Block) with 2080-LCD	No	
Pre-programmed memory module	Yes	Yes	Yes with 2080-LCD	Yes with microSD card	2080-MEMBAK-RTC
Programming rungs, Max	128	256	2 K steps	10 K steps	4 K steps(10/16 point), 10 K steps (24/48 point)
Communication					
Communication Ports, embedded	N/A		USB adapter (2080-USB)	RS232/RS485 serial port, Ethernet port	USB, RS232/RS485 serial port
EtherNet/IP	N/A		N/A	Yes	N/A
DeviceNet	Slave (1760-DNET)		N/A	Master (2080-DNET20)	
SCADA RTU - Modbus RTU Master	N/A		N/A	Yes	Yes
SCADA RTU - Modbus RTU Slave	N/A		N/A	Yes	Yes
Modbus/TCP	N/A		N/A	Yes	N/A

Table 1 - Features and Specifications of Pico/PicoGFX controllers and Micro800 controllers

	Pico		Micro800		
Attribute	**Pico**	**Pico GFX-70**	**Micro810**	**Micro820**	**Micro830**
ASCII Read/ Write	N/A		N/A	Yes	Yes
CIP Serial	N/A		N/A	Yes	Yes
Certifications					
CE	Yes	Yes	Yes	Yes	Yes
RCM	Yes	Yes	Yes	Yes	Yes
EAC	No	No	Yes	Yes	Yes
KC	No	No	Yes	Yes	Yes
UL	Yes	Yes	Yes	Yes	Yes
C-UL (including Class 1, Division 2 Hazardous Locations)	Yes	Yes	Yes	Yes	Yes

(1) If 1760-DU or 1760-DUB is being replaced, a 2080-REMLCD (for Micro820 only) should be used if remote mounting and graphics are not required.

(2) If 1760-DU or 1760-DUB is being replaced, and remote mounting or graphics is required, a 4 -inch PanelView 800 product may be substituted.

Micro800 Considerations

The differences between a Pico or a Pico-GFX70 controller and a Micro800 controller must be considered when selecting a Micro800 controller as a replacement in a Pico/ Pico-GFX70 controller application.

Programming Using the on-board keypad and Display

All programming and data adjustments for Pico controllers can be done using the on-board keypad and display or with the Allen-Bradley PicoSoft and PicoSoft Pro configuration software.

The Micro810 12-pt controllers can be configured by either Smart Relay function blocks using the 2080-LCD display (and without the use of Connected Components Workbench programming software), or programmed as a full feature micro controller using the Connected Components Workbench software.

Except for Micro810, the rest of the Micro800 controllers require the Connected Components Workbench software for configuration and programming.

PicoGFX graphic display

The PicoGFX controller adds the use of a graphic display. With its multi-function display, the Pico GFX-70 controller adds more flexibility and capability to the Pico family of Allen-Bradley controllers. It displays text, date, time, and even your own custom bitmaps. These graphics can be used as operator interface, or linked to control operations to provide real-time feedback. This controller offers an attractive and practical design with an IP65 display on the outside of your panel, and the controller and I/O conveniently housed within the panel.

Refer to Micro820 Controller Replacement for PicoGFX Controllers on page 18 when migrating the PicoGFX controller with a graphic display.

High Current Relay Output

Pico controllers have a high current relay output rating of 8 A (resistive).

The Micro810 12-pt controllers are smart relays with high current relay output models.

For Micro820 or Micro830, if high current relay output is required, use a 2-Channel High Current Relay Output Plug-in module (catalog number 2080sc-OW2IHC).

Communication

The Pico controller supports two connection methods: Point-to-Point serial interface with remote processor, 1760-RM-PICO, and DeviceNet.

The Pico GFX-70 supports three connection methods, Pico-Link, Point-to-Point serial connection with remote processor, 1760-RM-GFX, and DeviceNet.

When migrating to a Micro800 controller, refer to Table 2 on page 21 for information about supported network communications.

Controller Dimensions

This section shows the dimensions of Pico controllers and their counterparts from the Micro800 controller family.

Figure 1 - Pico 12-Point Controller

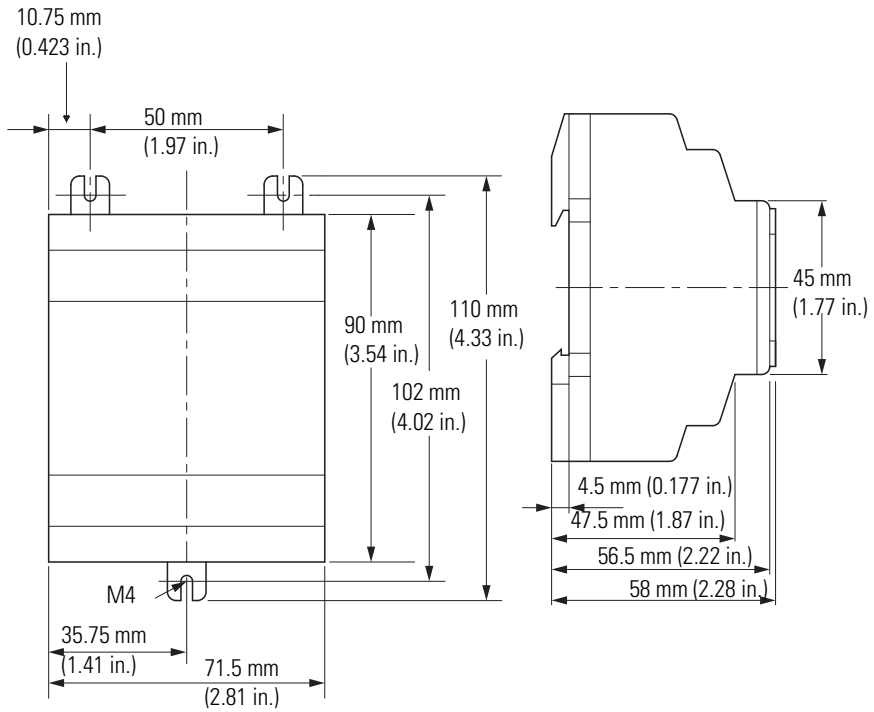

Figure 2 - Micro810 Controllers

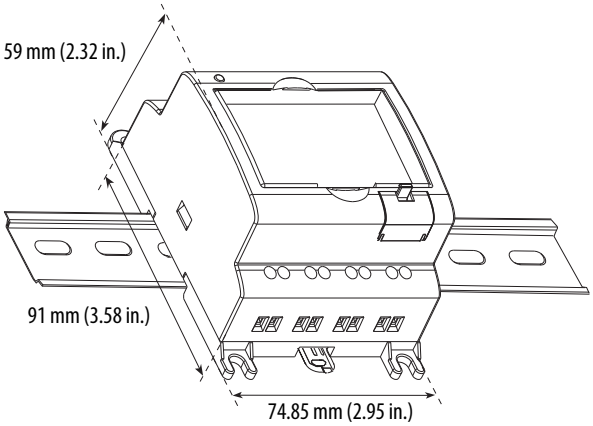

Controller	Height (mm)	Width (mm)	Depth (mm)
Pico 12-Point Controller 1760-L12AWA/-NC/-ND 1760-L12BBB/-ND 1760-L12BWB/-NC/-ND 1760-L12DWD/-ND 1760-L12NWN/-ND	110	71.5	58
Micro810 Controller 2080-LC10-10XXX	91	74.85	59

Figure 3 - Pico 18- and 20-Point Controllers and Pico Expansion I/O Modules

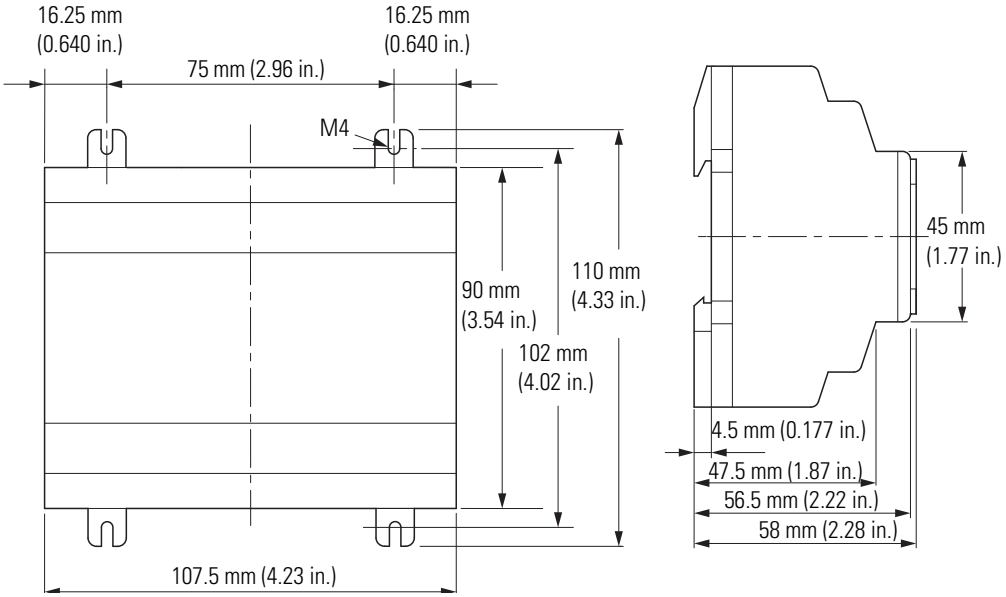

Figure 4 - Micro820 Controllers

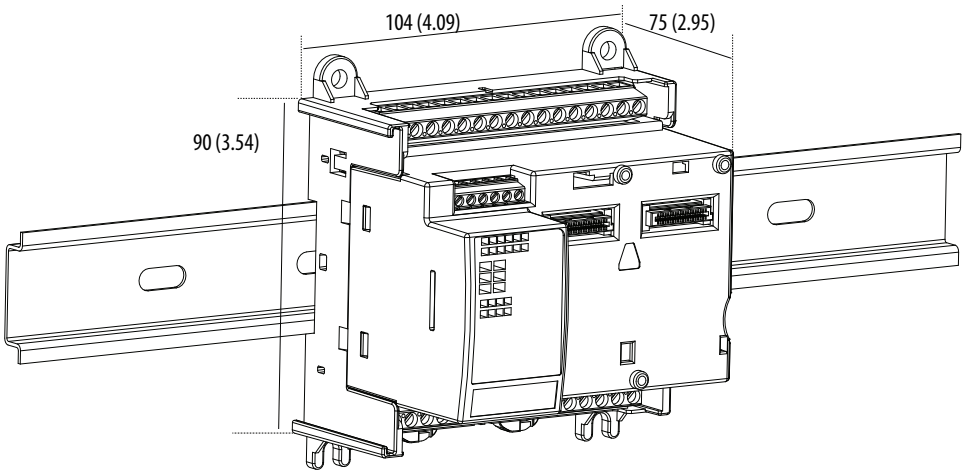

Figure 5 - Micro830 Controllers - 10 and 16 Point Controllers

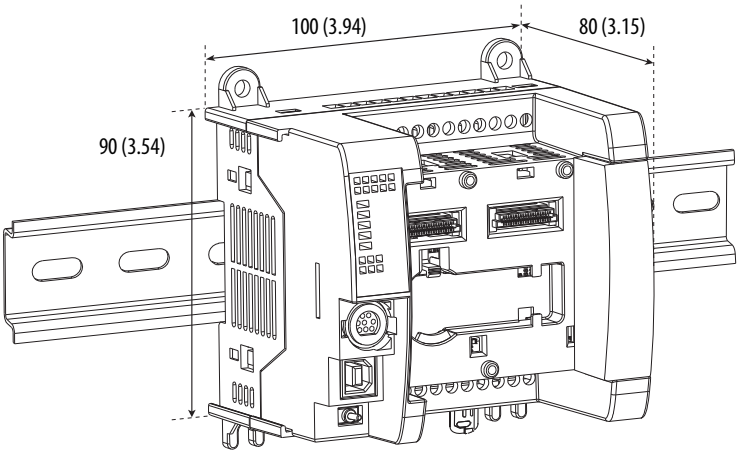

Figure 6 - Micro830 24-Point Controllers

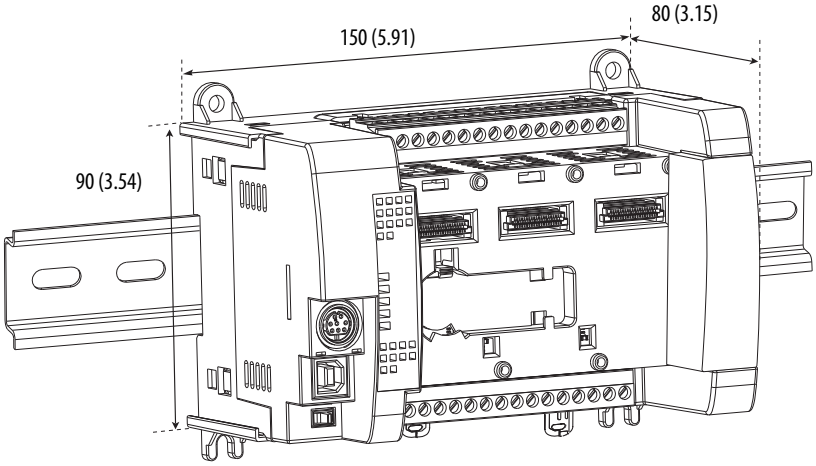

Figure 7 - Micro830 48-Point Controllers

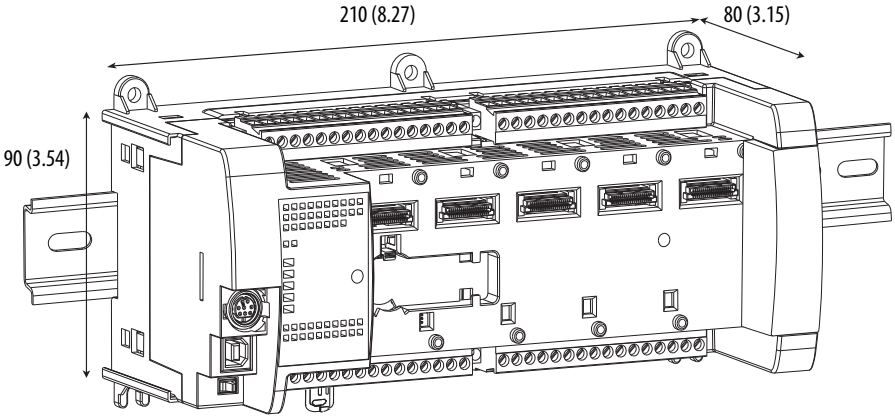

Controller	Height (mm)	Width (mm)	Depth (mm)
Pico Controller (18-Point/20-Point) 1760-L18AWA-EX/EXND 1760-L18BWB-EX/EXND 1760-L18DWD-EX/EXND 1760-L18NWN-EX/EXND 1760-L20BBB-EX/EXND	110	107.5	58
Micro820 Controller (20-Point) 2080-LC20-20XXX/R	90	104	75
Micro830 Controller (10/16-Point) 2080-LC30-10XXX, 2080-LC30-16XXX	90	100	80
Micro830 Controller (24-Point) 2080-LC30-24XXX	90	150	80
Micro830 Controller (48-Point) 2080-LC30-48XXX	90	210	80

Figure 8 - Pico GFX-70 Processor Unit

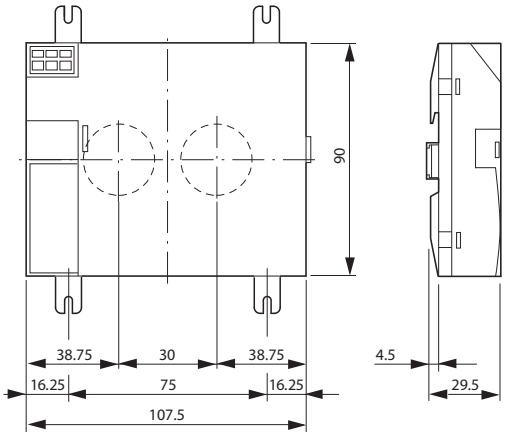

Figure 9 - Pico GFX-70 Display Unit (with or without keypad)

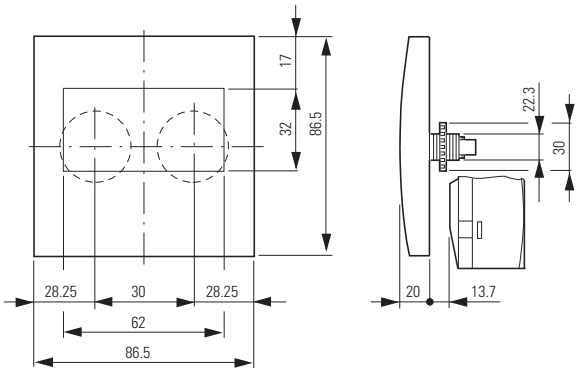

Figure 10 - Pico GFX-70 I/O Modules

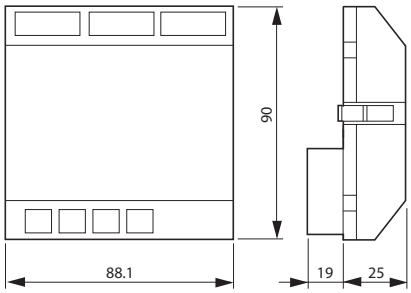

Controller	Height (mm)	Width (mm)	Depth (mm)
Processor: 1760-LDF/LDFC 1760-LDFA/LDFCA	90	107.5	30
Display: 1760-DU/DUB	86.5	86.5	20 (**1760-DU**, when fitted) 21.5 (**1760-DUB**, when fitted)
I/O: 1760-IB12XOB4IF 1760-IB12XOB4IOF 1760-IB12XOW4IF 1760-IB12XOW4IOF 1760-IA12XOW4I	90	88.1	25 (when fitted) 44 (when removed)
Micro820 Controller (20-Point) 2080-LC20-20XXX/R	90	104	75
Micro830 Controller (10/16-Point) 2080-LC30-10XXX, 2080-LC30-16XXX	90	100	80
Micro830 Controller (24-Point) 2080-LC30-24XXX	90	150	80
Micro830 Controller (48-Point) 2080-LC30-48XXX	90	210	80

Notes:

Select a Suitable Micro800 Controller

This chapter provides information about the suitable Micro800 controller replacement for different Pico controllers.

Convert to a Micro810 Controller

Refer to the following table to see the suitable Micro810 controller replacement for your Pico controller.

Pico Controller (12-pt)	Micro810	Accessories
1760-L12AWA	2080-LC10-12AWA	2080-LCD 2080-USBADAPTER
1760-L12AWA-NC		
1760-L12AWA-ND		2080-USBADAPTER
1760-L12BBB	2080-LC10-12QBB	2080-LCD 2080-USBADAPTER
1760-L12BBB-ND		2080-USBADAPTER
1760-L12BWB	2080-LC10-12QWB	2080-LCD 2080-USBADAPTER
1760-L12BWB-NC		
1760-L12BWB-ND		2080-USBADAPTER
1760-L12DWD	2080-LC10-12DWD	2080-LCD 2080-USBADAPTER
1760-L12DWD-ND		2080-USBADAPTER
1760-L12NWN	2080-LC10-12QWB	2080-LCD 2080-USBADAPTER
1760-L12NWN-ND		2080-USBADAPTER

Take note of the following recommendations:

- If high current relay output is required, use a 2-Channel High Current Relay Output Plug-in module (catalog number 2080sc-OW2IHC) with a Micro820 controller.
- Use a Micro800 Remote LCD Display (catalog number 2080-REMLCD) for the Micro820 controller.
- Use a 2080-PS120-240VAC power supply module when using a Micro810 controller (base power is 24V DC).

Convert to a Micro820 Controller

Micro820 Controller Replacement for Pico Controllers

Refer to the following table to see the suitable Micro820 controller replacement for your Pico controller.

Pico Controller (18-pt/20-pt)	Micro820	Accessories
1760-L18AWA-EX	2080-LC20-20AWB	2080-REMLCD 2080-PS120-240VAC
1760-L18AWA-EXND		2080-PS120-240VAC
1760-L18BWB-EX	2080-LC20-20QWB	2080-REMLCD
1760-L18BWB-EXND		—
1760-L18DWD-EX	2080-LC20-20QWB	2080-REMLCD 2080-PS120-240VAC
1760-L18DWD-EXND		2080-PS120-240VAC
1760-L18NWN-EX	2080-LC20-20QWB	2080-REMLCD 2080-PS120-240VAC
1760-L18NWN-EXND		2080-PS120-240VAC
1760-L20BBB-EX	2080-LC20-20QBB	2080-REMLCD
1760-L20BBB-EXND		—

Take note of the following recommendations:

- If you are using a Pico controller with more than 35 I/O, convert to a Micro830 controller.
- Use a Micro800 plug-in as expansion I/O for a Micro820 controller.
- If high current relay output is required, use a 2-Channel High Current Relay Output Plug-in module (catalog number 2080sc-OW2IHC).
- If the 1760-L18AWA-EXND controller requires all 12 AC inputs, convert to a Micro830 controller. The Micro820 2080-LC20-20AWB controller only has 8 AC inputs and 4 DC inputs.
- If display is required, use a PanelView 800 4 in. color TFT LCD (catalog number 2711R-T4T) for a Micro830 controller.

Micro820 Controller Replacement for PicoGFX Controllers

Refer to the following table to see the suitable Micro820 controller replacement for your PicoGFX controller.

GFX Processor	GFX I/O module	Micro820 Controller	Accessories
1760-LDF 1760-LDFC	1760-IB12XOB4IF	2080-LC20-20QBB	2080-REMLCD/ 2711R-T4T
	1760-IB12XOB4IOF		
	1760-IB12XOW4IF	2080-LC20-20QWB	
	1760-IB12XOW4IOF		
1760-LDFA 1760-LDFCA	1760-IA12XOW4I	2080-LC20-20AWB	2080-REMLCD/ 2711R-T4T 2080-PS120-240VAC

Take note of the following recommendations:

- If a1760-IA12XOW4I module requires all 12 AC inputs, convert to a Micro830 controller.
- If a PicoGFX controller exceeds 35 I/O, convert to a Micro830 controller.
- If high current relay output is required, use a 2-Channel High Current Relay Output Plug-in module (catalog number 2080sc-OW2IHC).
- When replacing a 1760-DU or 1760-DUB display unit, use a 2080-REMLCD if remote mounting and graphics are not required.
- When replacing a 1760-DU or 1760-DUB display unit and remote mounting or graphics is required, use a PanelView 800 product as substitute.

Notes:

Network Considerations

The Micro800 family of controllers supports the following network communications:

Table 2 - Supported Network Communications for Micro800 Controllers

Micro800 controller	USB programing port	Serial Port			Ethernet		DeviceNet (with Plug-in)
		CIP Serial (Client/ Server)	Modbus RTU (Master/ Slave)	ASCII/Binary	EtherNet/IP (Client/Server)	Modbus TCP (Client/Server)	DeviceNet Scanner
Micro810	Yes	No	No	No	No	No	No
Micro820	Yes with 2080-REMLCD	Yes	Yes	Yes	Yes	Yes	Yes
Micro830	Yes	Yes	Yes	Yes	No	No	Yes
Micro850	Yes	Yes	Yes	Yes	Yes	Yes	Yes

DeviceNet

The Pico DeviceNet module (catalog number 1760-DNET) allows you to have a Pico controller operate as a slave device on the DeviceNet network.

The DeviceNet plug-in module (catalog number 2080-DNET20) is required for Micro820, Micro830, and Micro850 controllers for DeviceNet communications and will control up to 20 DeviceNet nodes.

The 2080-DNET20 plug-in module is a full DeviceNet Scanner.

For more information on getting started with Micro800 DeviceNet, refer to the following:

- Knowledgebase Answer ID #597453: https://rockwellautomation.custhelp.com/app/answers/detail/a_id/597453
- Micro800 Plug-in Modules User Manual, publication number 2080-UM004 (See Appendix B - Quickstart)

Control and network setup is simplified using 12 different user-defined function blocks (UDFBs) and a sample project available for download from the Sample Code website: Sample Code Library.

The user-defined function blocks (UDFBs) provide control for the following products:

- CompactBlock LDX
- Tower Stack Lights

- PowerFlex Drives
- E1 Overloads

For more information about the mechanical layout of Micro800 and DeviceNet, refer to Micro800 DeviceNet Popular Configuration Drawing, publication CCSIMP-QR001.

Pico-Link

The Pico GFX-70 controller can connect up to eight Pico-Link stations and supports up to 272 I/O.

The 2080-DNET20 DeviceNet plug-in module can be added to the Micro800 controller to control up to 20 nodes and supports up to 320 I/O with CompactBlock™ LDX I/O.

For Micro800, the serial port of Micro820, Micro830, and Micro850 controllers supports CIP Serial and Modbus/RTU. In addition, a Micro820 controller supports EtherNet/IP and Modbus/TCP communications with the embedded Ethernet port.

Point-to-Point Serial Connection

The serial interface allows connection between two Pico processors. One processor could be located for operator access to a keypad and display to share data with a second processor located behind a panel.

For Micro800, the serial port of Micro820, Micro830 and Micro850 controllers supports CIP Serial and Modbus/RTU. In addition, a Micro820 controller supports EtherNet/IP and Modbus/TCP communications with the embedded Ethernet port.

Rockwell Automation Support

Rockwell Automation provides technical information on the Web to assist you in using its products. At http://www.rockwellautomation.com/support, you can find technical manuals, technical and application notes, sample code and links to software service packs, and a MySupport feature that you can customize to make the best use of these tools. You can also visit our Knowledgebase at http://www.rockwellautomation.com/knowledgebase for FAQs, technical information, support chat and forums, software updates, and to sign up for product notification updates.

For an additional level of technical phone support for installation, configuration, and troubleshooting, we offer TechConnect℠ support programs. For more information, contact your local distributor or Rockwell Automation representative, or visit http://www.rockwellautomation.com/support/.

Installation Assistance

If you experience a problem within the first 24 hours of installation, review the information that is contained in this manual. You can contact Customer Support for initial help in getting your product up and running.

United States or Canada	1.440.646.3434
Outside United States or Canada	Use the Worldwide Locator at http://www.rockwellautomation.com/support/americas/phone_en.html, or contact your local Rockwell Automation representative.

New Product Satisfaction Return

Rockwell Automation tests all of its products to help ensure that they are fully operational when shipped from the manufacturing facility. However, if your product is not functioning and needs to be returned, follow these procedures.

United States	Contact your distributor. You must provide a Customer Support case number (call the phone number above to obtain one) to your distributor to complete the return process.
Outside United States	Please contact your local Rockwell Automation representative for the return procedure.

Documentation Feedback

Your comments will help us serve your documentation needs better. If you have any suggestions on how to improve this document, complete this form, publication RA-DU002, available at http://www.rockwellautomation.com/literature/.

Rockwell Otomasyon Ticaret A.Ş., Kar Plaza İş Merkezi E Blok Kat:6 34752 İçerenköy, İstanbul, Tel: +90 (216) 5698400

www.rockwellautomation.com

Power, Control and Information Solutions Headquarters

Americas: Rockwell Automation, 1201 South Second Street, Milwaukee, WI 53204-2496 USA, Tel: (1) 414.382.2000, Fax: (1) 414.382.4444
Europe/Middle East/Africa: Rockwell Automation NV, Pegasus Park, De Kleetlaan 12a, 1831 Diegem, Belgium, Tel: (32) 2 663 0600, Fax: (32) 2 663 0640
Asia Pacific: Rockwell Automation, Level 14, Core F, Cyberport 3, 100 Cyberport Road, Hong Kong, Tel: (852) 2887 4788, Fax: (852) 2508 1846

Publication 2080-RM004A-EN-E - March 2016