RS □□1 Super Slide™ (Standard Type)

Solderable with auto dipping and available in a wide variety

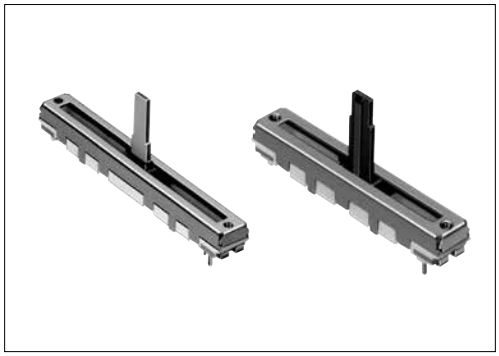

Typical Specifications

Items	Specifications
Total resistance tolerance	±20%
Maximum operating voltage	Please see P.392
Operating force	0.3 to 2.5N
Operating life	15,000 cycles
Operating temperature range	−25℃ to +70℃

Product Line

Insulated lever

Number of resistor elements	Travel (mm)	Lever types	Length of lever (L1) (mm)	Total resistance (k Ω)	Resistance taper	Detent	Mounting plate	Minimum order unit (pcs.) Japan	Minimum order unit (pcs.) Export	Products No.	Drawing No.
Single-unit	20	J-1	5	10	1B	Without	Without	700	2,800	**RS201111J011**	1
	30				15A			600	2,400	**RS301111J00P**	2
					1B		With			**RS30111AJ01R**	3
				50			Without			**RS301111J00R**	2
					15A		With			**RS30111AJ01K**	3
		A	10	10	1B		Without			**RS301111A01G**	4
		C								**RS301111C01L**	5
							With			**RS30111AC00V**	6
	45	B						1,300	1,300	**RS45111ABA02**	7
Dual-unit	30	C						600	2,400	**RS30112AC00J**	8
		J-1	5		3B					**RS30112AJA02**	9

Metal lever

Number of resistor elements	Travel (mm)	Lever types	Length of lever (L1) (mm)	Total resistance (k Ω)	Resistance taper	Detent	Mounting plate	Minimum order unit (pcs.) Japan	Minimum order unit (pcs.) Export	Products No.	Drawing No.
Single-unit	15	9-1	10	10	15A	Without	With	700	2,800	**RS15111A900B**	10
	20				1B					**RS20111A9A03**	11
	30							600	2,400	**RS30111A9012**	12
		4	15	20			Without	1,440	2,880	**RS3011114A02**	13
		6		10			With			**RS30111A602N**	14
	45	9-1	10					1,300	1,300	**RS45111A900F**	15
							Without			**RS4511119A04**	16
	60	6	15		15A		With	900	900	**RS6011YA600M**	17
		9-1	10		1B		Without			**RS6011Y19004**	18
		6	15							**RS6011Y1600Q**	19
Dual-unit	45	4	20					1,150	1,150	**RS451121400A**	20
							With			**RS45112A400G**	21
	60	6	15		15A			900	900	**RS60112A600N**	22
				20						**RS60112A600U**	

Note

Other varieties are also available. Refer to "Other Specifications" (P.392, 393).

Refer to P.392 for other specifications.
efer to P.393 for configuration details.
Refer to P.394 for ordering products not listed.
Refer to P.417 for soldering conditions.

Packing Specifications

Tray

Product No.	Number of resister elements	Number of packages (pcs.)		Export package measurements (mm)
		1 case /Japan	1 case /export packing	
RS151 **RS201**	Single-unit	700	2,800	518×378×422
RS301	Single-unit/ Dual-unit	600	2,400	
RS3011114A02 **RS30111A602N**	Single-unit	1,440	2,880	518×378×530
RS451	Single-unit	1,300	1,300	529×373×273
	Dual-unit	1,150	1,150	
RS601	Single-unit/ Dual-unit	900	900	

Dimensions

Unit:mm

No.	Style	PC board mounting hole dimensions (Viewed from mounting side)
1	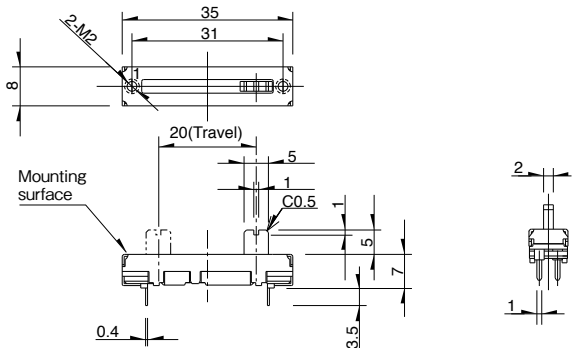	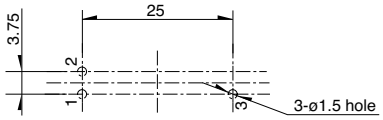
2	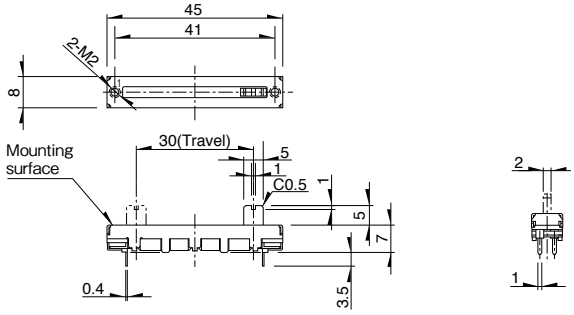	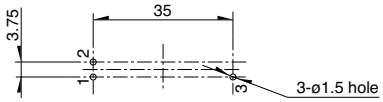
3	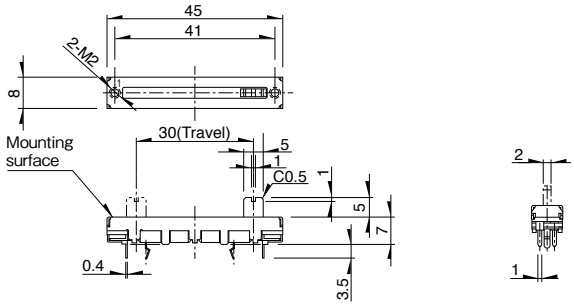	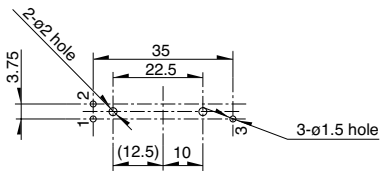

The length of Lever (L_1) can be customized. Refer to P.393 for details.

Dimensions

Unit:mm

No.	Style	PC board mounting hole dimensions (Viewed from mounting side)
4	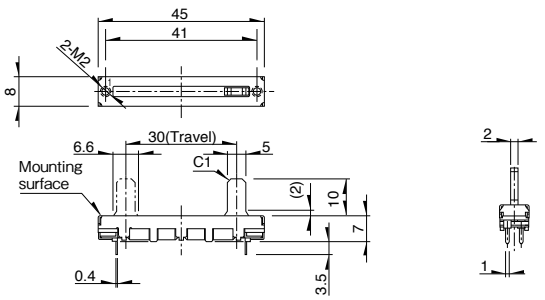	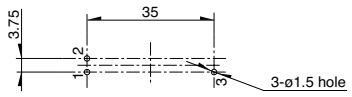
5	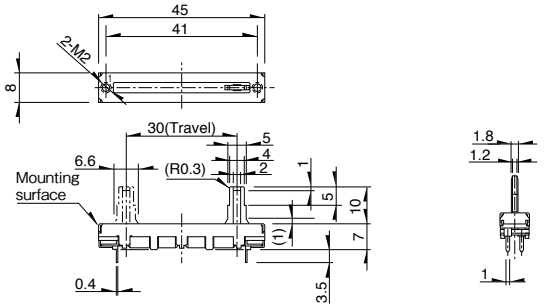	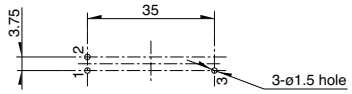
6	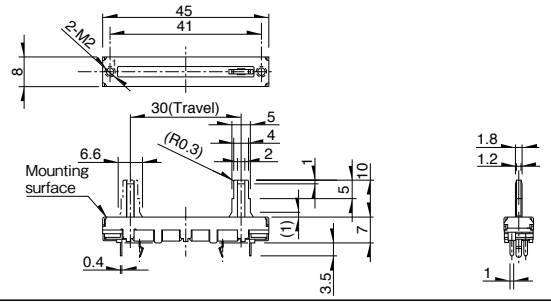	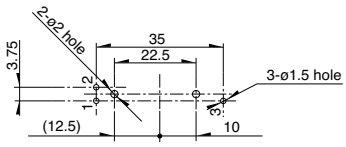
7	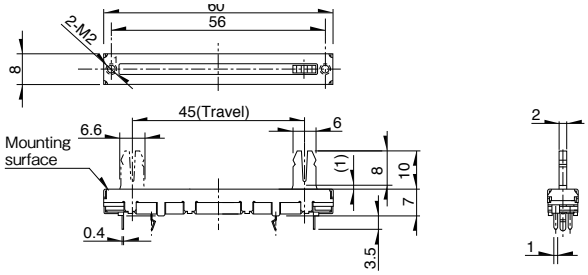	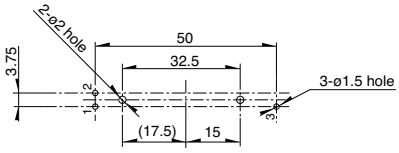
8	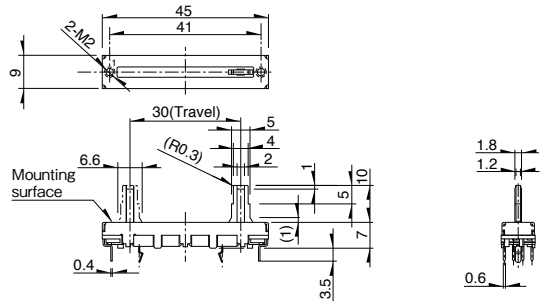	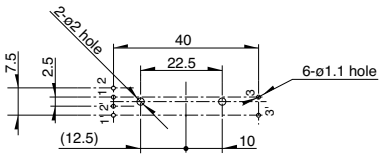

The length of Lever (L_1) can be customized. Refer to P.393 for details.

Dimensions

Unit:mm

No.	Style	PC board mounting hole dimensions (Viewed from mounting side)
9	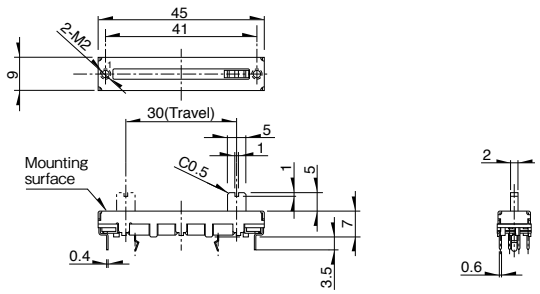	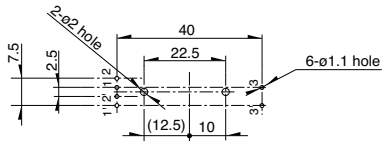
10	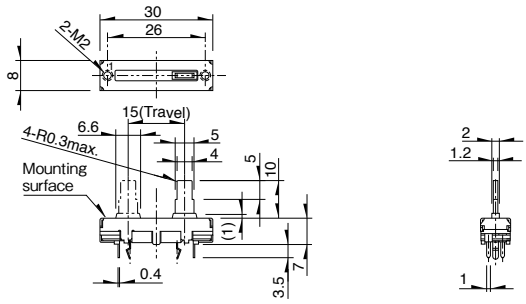	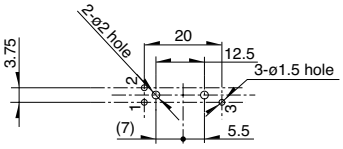
11	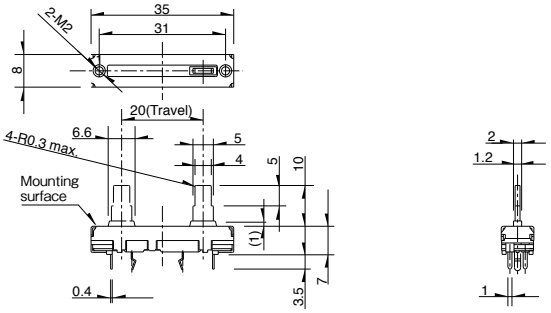	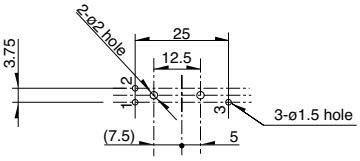
12	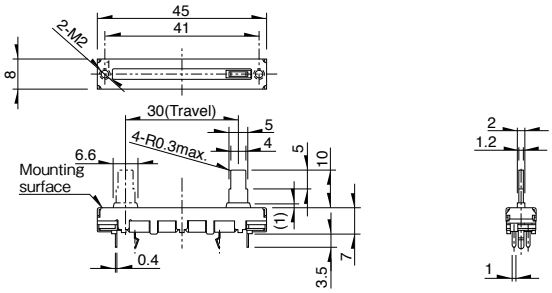	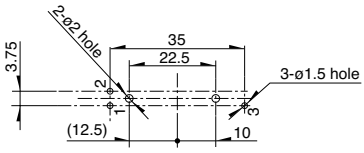
13	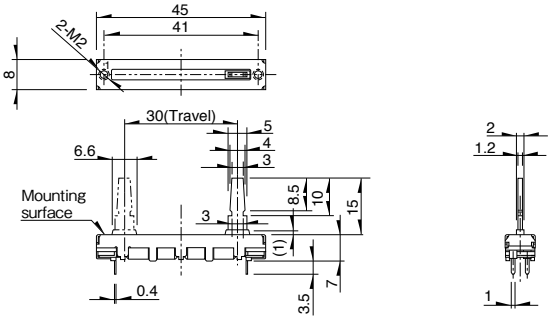	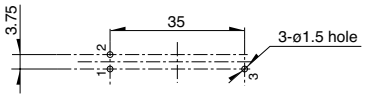

The length of Lever (L_1) can be customized. Refer to P.393 for details.

Dimensions

Unit:mm

No.	Style	PC board mounting hole dimensions (Viewed from mounting side)
14	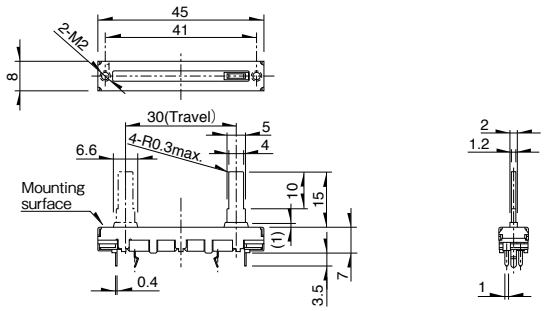	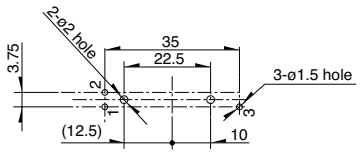
15	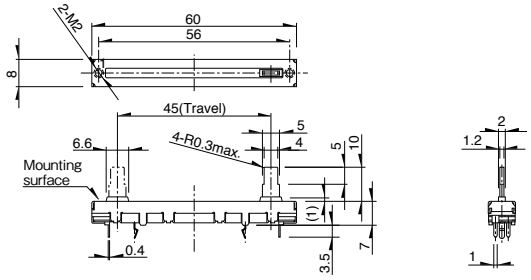	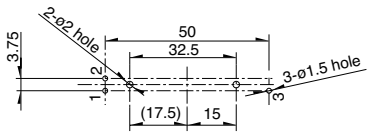
16	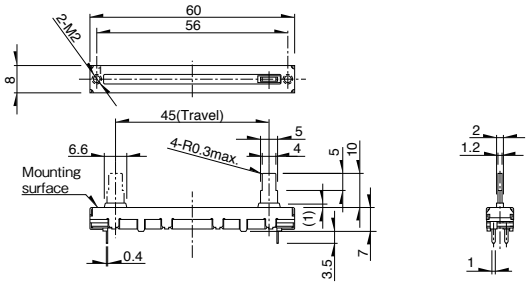	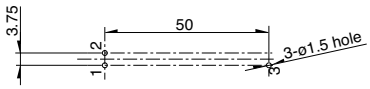
17	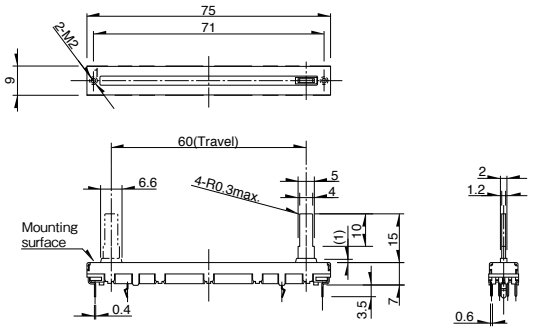	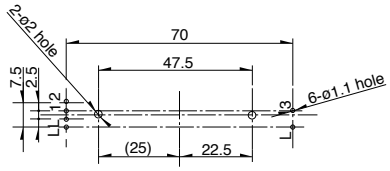 L: Lug terminal
18	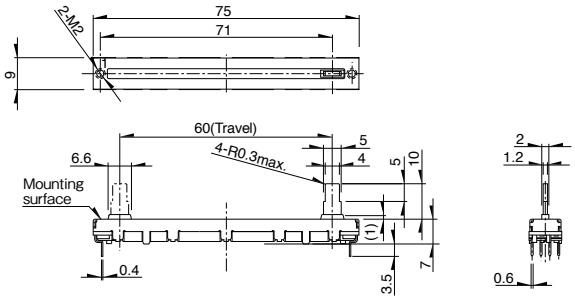	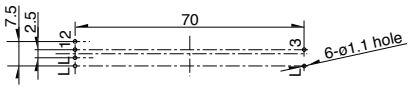 L: Lug terminal

The length of Lever (L_1) can be customized. Refer to P.393 for details.

Dimensions

Unit:mm

No.	Style	PC board mounting hole dimensions (Viewed from mounting side)
19	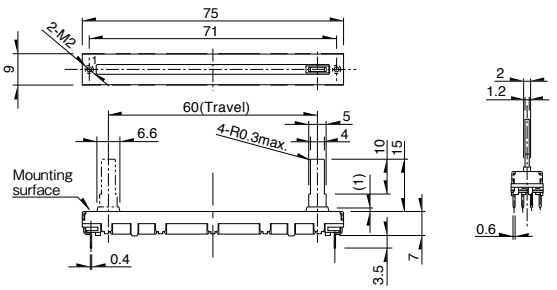	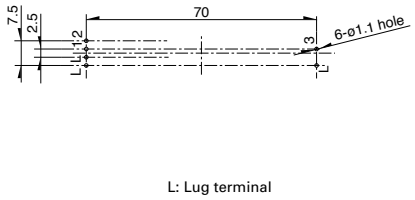
20	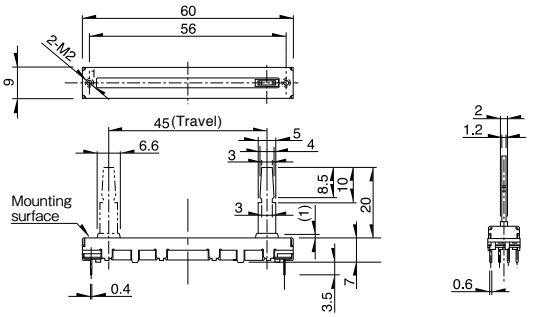	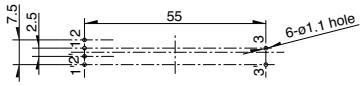
21	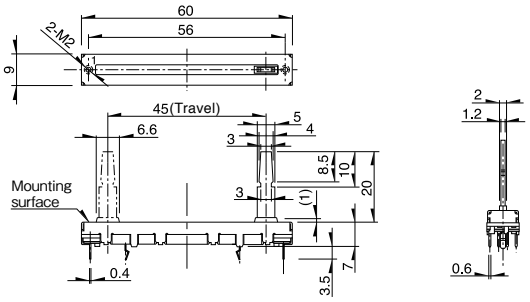	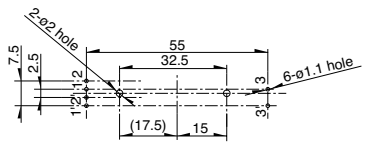
22	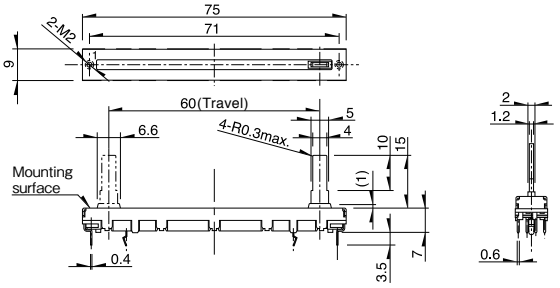	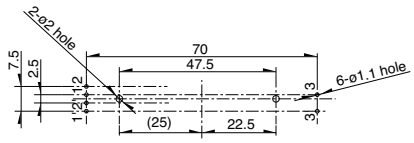

The length of Lever (L_1) can be customized. Refer to P.393 for details.

In addition to the products listed, we can accommodate the follow specifications.

Travel Distance Variety

Travel (mm)	15	20	30	45	60

Total Resistance Variety

Totalresistance (k Ω)	10	20	50	100	200

Resistance Taper

Resistance taper	1B	3B	4B	10A	15A

Note

DC (10V DC) is also available. (Tapped types are not available)

Rated Power

Travel	Single-unit		Dual-unit	
	1B	4B, 10A, 15A	1B, 3B	4B, 10A, 15A
15mm	0.05W	0.025W	0.025W	0.012W
20mm	0.1W	0.05W	0.05W	0.025W
30mm	0.2W	0.1W	0.1W	0.05W
45mm	0.25W	0.125W	0.125W	0.06W
60mm	0.2W	0.1W	0.2W	0.1W

Maximum Operating Voltage

Travel	Single-unit		Dual-unit	
	1B	4B, 10A, 15A	1B, 3B	4B, 10A, 15A
15mm	100V AC, 10V DC	50V AC, 10V DC	100V AC, 10V DC	50V AC, 10V DC
20mm	200V AC, 10V DC	150V AC, 10V DC		
30mm			200V AC, 10V DC	150V AC, 10V DC
45mm				
60mm				

Terminal Layout / Circuit Diagram (Viewed from Mounting Side)

Single-unit

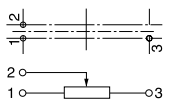

Single-unit (with lug terminal) (RS6011Y only)

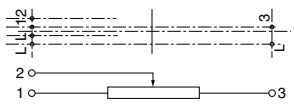

L : Lug terminal

Dual-unit

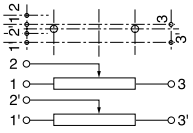

Note

Marked are specifications recommended by Alps Alpine.

Refer to P.394 for ordering products not listed.

In addition to the products listed, we can accommodate the follow specifications.

Lever Types

Unit:mm

Metal lever		
Code	Dimensions	
9-2	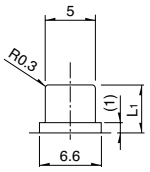	t=1.2 L1: 5
9-1	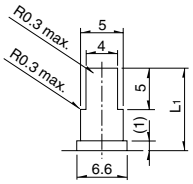	t=1.2 L1: 10
6	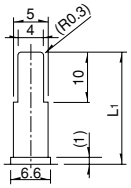	t=1.2 L1: 15 20
4	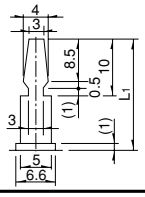	t=1.2 L1: 15 20

Insulated lever	
Code	Dimensions
J-1	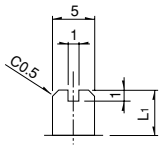 t=2 L1: 5
A	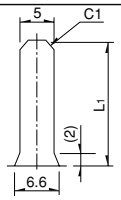 t=2 L1: 10 15
C	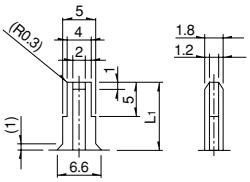 L1: 10 15

Corresponding Specifications

Dust cover	Available
Tap	Available (Only the center-positioned)

Unit:mm

Insulated lever configuration
B
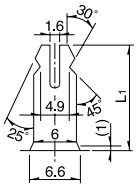 t=2 L1: 10 15

Note

Marked are specifications recommended by Alps Alpine.

When ordering product varieties that are not listed, specify referring to the examples below.

Sample Part Number

RS6011Y – J105 – C0 – P0 – B103

Specify the travel distance from the below codes.

Travel (mm)	Code	Travel (mm)	Code
15	15	45	45
20	20	60	60
30	30	—	—

Number of resistor elements

Single	1 (Enter "Y" for 60 mm travel)
Dual	2

Lever type / Length of lever (mm)

Insulated lever

Code	Configuration	Length
J1	J-1	5
0A	A	10
		15
0C	C	10
		15
0B	B	10
		15

Metal lever

Code	Configuration	Length
91	9-1	10
92	9-2	5
04	4	15
		20
06	6	15
		20

Length of operation unit
If the length is less than 10 mm, add a "0" before the number.
(e.x., 5 mm length= "05")

Detent

Code	Detent
C0	Without
C1	Center

Mounting plate

Code	Mounting plate
P0	Without
P1	With

Resistance taper

Code	Resistance taper
A	15A
B	1B
D	10A
W	4B
V	3B

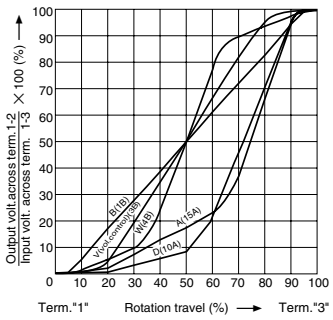

Total resistance

Code	Total resistance (kΩ)	Code	Total resistance (kΩ)
103	10	104	100
203	20	204	200
503	50	—	—

Note

Marked are specifications recommended by Alps Alpine.

Slide Potentiometers

List of Varieties

Type		Standard Type		Master Type	Low-profile Master Type
Series		Super Slide™	Compact Reflow Type	K Fader	N Fader
		RS □□ 1	**RS08U**	**RS □□ K**	**RS □□ N**
		Single-unit/Dual-unit	Single-unit	Single-unit/Dual-unit	Single-unit/Dual-unit
Photo					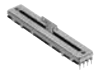
Travel (mm)		15, 20, 30, 45, 60	8	60, 100	
Direction of lever		Vertical	Horizontal	Vertical	
Lever material		Metal / Resin	Resin	Metal	
Operating temperature range		−25℃ to +70℃	−10℃ to +70℃	−10℃ to +60℃	
Operating life		15,000 cycles	10,000 cycles	100,000 cycles (Standard) 300,000 cycles (CP)	30,000 cycles
Available for automotive use		○	—	—	—
Life cycle (availability)					
Electrical performance	Total resistance (k Ω)	10, 20, 50, 100, 200	10	10, 50, 100 (Standerd) 10 (CP)	10, 50, 100, 250
	Resistance taper	10A, 15A, 1B, 3B, 4B	1B	15A, 1B	15A, 1B, 10A
	Rated Power	Please see P.392	0.025W	0.25W	0.1W (RS60N) 0.25W (RSA0N)
	Insulation resistance	100MΩ min. 250V DC	100MΩ min. 100V DC	100MΩ min. 250V DC	
	Voltage proof	300V AC for 1 minute	100V AC for 1 minute	250V AC for 1 minute	
	Center-taps	Without / With	Without		
Mechanical performance	Operating force	0.3 to 2.5N	0.17±0.15N	Please see P.399	Single-unit: $0.3^{+0.5}_{-0.25}$ N Dual-unit: $0.4^{+0.5}_{-0.35}$ N
	Center detent	Without / With	Without		
	Stopper strength	50N	5N	100N	
	Lever push-pull strength	50N	5N	100N	50N
	Lever wobble (mm) ※ Both sides	$\frac{2(2\times L)}{20}$	—	$\frac{2(2\times L)}{25}$	
	Detent slip-out force	Operating force + (0.2 to 2N)	—	—	—
	Lever deviation (mm) ※ One side	0.5 max.	—	0.5 max.	0.5 max. (One side)
Terminal style		Insertion	Reflow	Lead (Standard) Connector (CP)	Insertion
Page		386	395	396	401

Slide Potentiometers Soldering Conditions · · · · · · · · · · 417
Potentiometer Cautions · · · · · · · · · · 418
Potentiometers Measurement and Test Methods · · · · · · · · · · 420
Potentiometers Resistance Taper · · · · · · · · · · 420

Notes

1. "L" in the "Lever Wobble" column of the above table indicates the length of lever.
2. 「RS □□」
   □□ indicates travel.
3. ○ Indicates applicability to some products in the series.

Reference for Manual Soldering

Series	Tip temperature	Duration of Soldering time	No. of solders
RS□□1, RS08U, RS□□K (Standard), RS□□N, RS□□N11S, RS6011□P, RS□□N1□M, RSA0K1□V (Motor terminal)	350℃ max.	3s max.	1 time

Reference for Dip Soldering

Series	Preheating		Dip soldering		Number of soldering
	Soldering surface temperature	Heating time	Soldering temperature	Soldering time	
RS□□1, RS□□N, RS□□N11S, RS6011□P, RS□□N1□M	100℃ max.	1 min. max.	260℃	5s max.	1 time

Example of Reflow Soldering Condition

Temperature profile

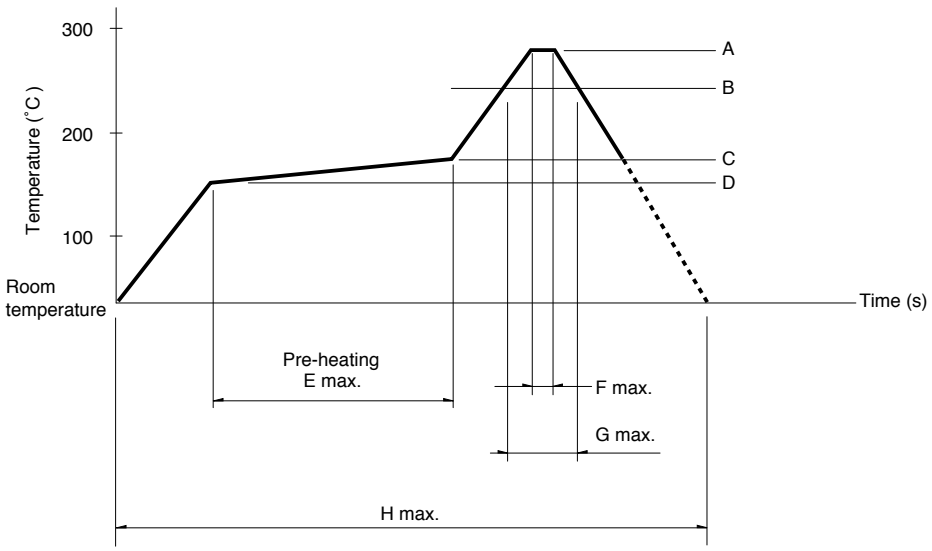

Series	A	B	C	D	E	F	G	H	No. of reflows
RS08U	250℃	200℃	150℃	150℃	2 min.	3s	40s	4 min.	1 time

Notes

1. When using an infrared reflow oven, solder may sometimes not be applied. Be sure to use a hot air reflow oven or a type that uses infrared rays in combination with hot air.
2. The temperatures given above are the maximum temperatures at the terminals of the products when employing a hot air reflow method. The temperature of the PC board and the surface temperature of the products may vary greatly depending on the PC board material, its size and thickness. Ensure that the surface temperature of the products does not rise to 250°C or greater.
3. Conditions vary to some extent depending on the type of reflow bath used. Be sure to give due consideration to this prior to use.