Product Data Sheet

GTH 252/30K

Heavy duty wheel, with Blickle Extrathane® polyurethane tread, with cast iron wheel centre

EAN 4047526266691
ID 266692
Customs tariff number 87169090

Made in Germany

Tread:
- high-quality polyurethane elastomer Blickle Extrathane®, hardness 92 Shore A
- low rolling resistance
- high abrasion resistance
- high cut and tear propagation resistance
- colour yellow, non-marking, non-staining
- excellent chemical connection with the wheel centre

Wheel centre:
- rugged grey cast iron
- with grease nipple
- lacquered, colour silver

Other features:
- high chemical resistance to many aggressive substances
- operating temperature: -20 °C to +70 °C, temporarily up to +90 °C, reduced load capacity over +40 °C

Blickle Extrathane®

Tread and tyre hardness
92 Shore A

Rolling resistance
very good

Wear resistance
excellent

Operating noise / floor surface preservation
good

Technical data:
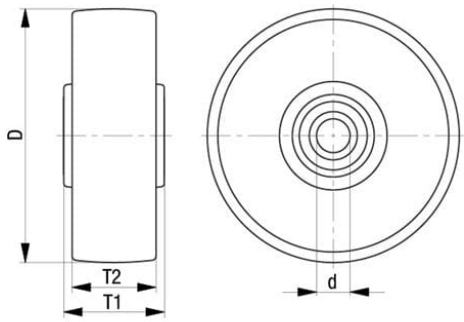
Wheel Ø (D)		250 mm
Wheel width		80 mm
Load capacity at 4 km/h		2,200 kg
Load capacity at 6 km/h		1,760 kg
Load capacity at 10 km/h		1,100 kg
Load capacity (static)		5,500 kg
Bearing type		ball bearing
Axle bore Ø (d)		30 mm
Hub keyway (T1)		90 mm
Temperature resistance min		-20 °C
Temperature resistance max		70 °C
Tread and tyre hardness		92 Shore A
Unit weight		10.7 kg
Non-marking		✓
Non-staining		✓
Antistatic		✗
ESD		✗
Electrically conductive		✗
Corrosion-resistant		✗
Heat-resistant		✗
Tread hydrolysis-resistant		✗
Suitable for autoclaves		✗