© 2024 TE Connectivity. All Rights Reserved.

REVISIONS					
P	LTR	DESCRIPTION	DATE	DWN	APVD
	C1	INTRODUCTION OF NEW VARIANT	18NOV2024	LSZ	SZN
	C2	TOLERANCE CORRECTION	08AUG2025	GYR	LSZ
	C3	INTRODUCTION OF NEW VARIANT	19MAR2026	GYR	SZN
	C4	NOTE CORRECTION	08MAY2026	GYR	SZN

1 LASER PRINT:

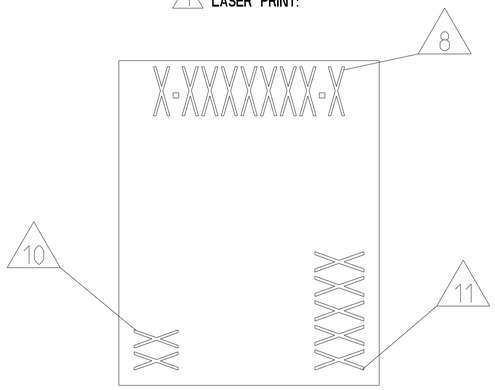

CODINGS 2:1

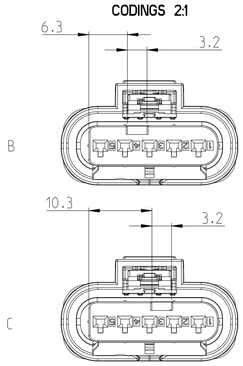

REATAINER FLAP OPEN VS CLOSED 2:1

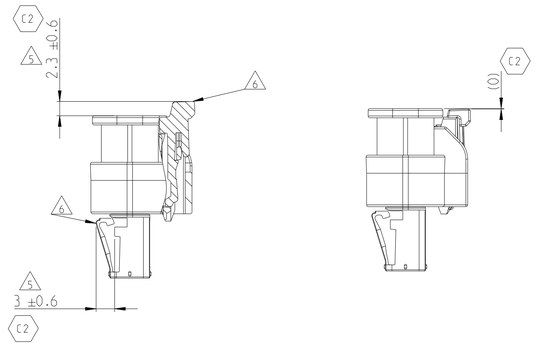

RETAINER FLAP OPEN
CPA PRE-LOCKED
(AS RECEIVED CONDITION)

RETAINER FLAP CLOSED
CPA CLOSED

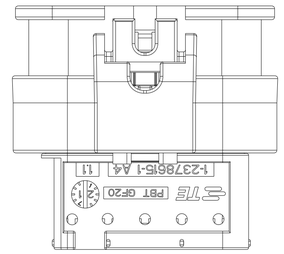

C1 VERSION WITHOUT CPA

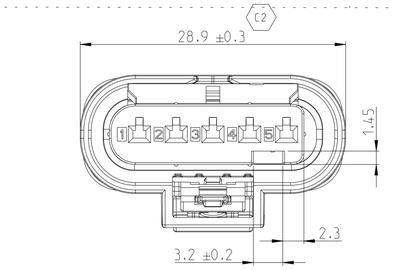

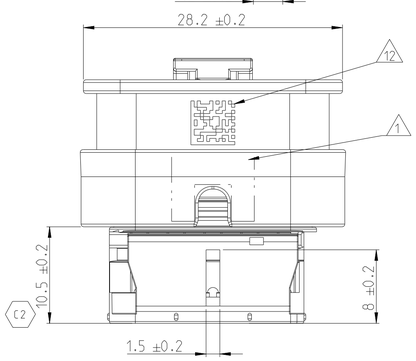

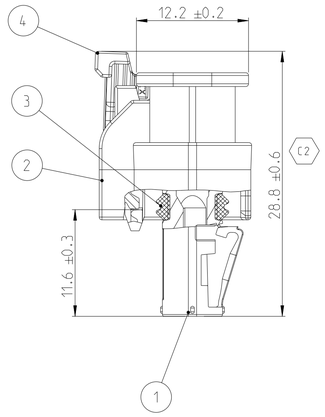

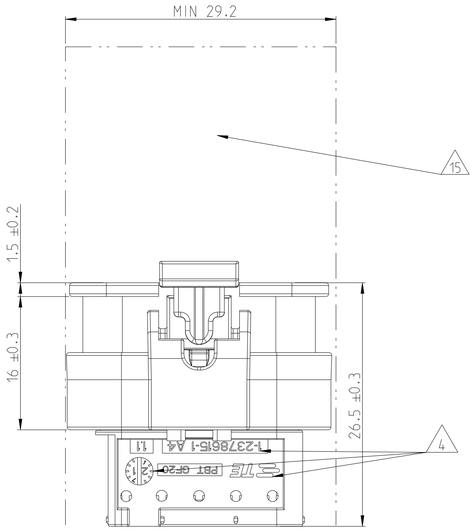

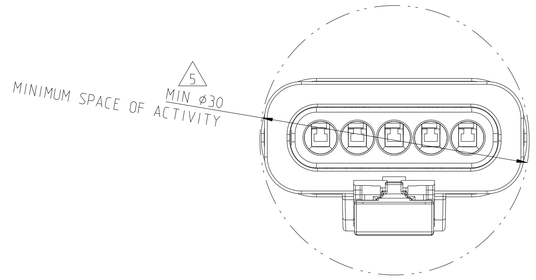

NOTES:

1 AREA FOR LASER PRINT

2 USABLE CONTACTS: MCON 1.2 LL - SINGLE WIRE SEAL CONTACTS
SEE TE-NO. 1452674

3 SEE PRODUCT SPECIFICATION NO.108-18782 FOR THE FOLLOWING PRODUCT PROPERTIES:
-MAX. WIRE SIZE RANGE PERMITTED
-PERMISSIBLE CURRENT CARRYING CAPACITY OF THE SINGLE CONTACT
-MAX OPERATING VOLTAGE
-VIBRATION RESISTANCE
-MAX OPERATING TEMPERATURE

MAX OPERATING TEMPERATURE 130°C

4 SUPPLIER-MARK (ONLY FOR TE CONNECTIVITY INTERNAL TRACKING)

5 SPACE OF ACTIVITY

6 SUPPLY CONDITION: CPA (4) AND
RETAINER FLAP (1) IN PRELOCKED POSITION

7 WARPAGE PERMITTED TO MAX. -0.5mm

8 TE ORDER-NO.

9 ACCORDING TO INTERFACE DRAWING
SEE TE-NO. 114-18679-3

10 ASSEMBLY LINE SEGMENT IDENTIFICATION

11 DATE CODE (DDDYY)

C4 12 QR CODE:
FIRST ROW: MANUFATCURING INFORMTATION ONLY FOR TE CONNECTIVITY
SECOND ROW: TE.COM ONLINE CATALOG LINK FOR CUSTOMER

14 THE MARKING ON THE COMPONENTS MAY VARY IN THE SAME BATCH
IT DOES NOT SERVE ANY FUNTCTION
IT IS ONLY USED FOR TE CONNECTIVITY INTERNAL TRACKING
FOR VALID CUSTOMER TRACKING PLEASE USE THE LASER PRINT - SEE NOTE 1

15 PLEASE CARRY OUT THE CLEARANCE TEST FOR THE SOCKET HOUSING
BASED ON THE WIRE SIZE USED

16 SECONDARY LOCK THAT HAVE BEEN CLOSED DURRING TRANSPORT CAN BE MOVED BACK
TO PRE-LOCKED POSSITION ACCORDING TO INSTRUCTIONS FOUND IN THE
APPLICATION SPEC. NO 114-94767

1-2378605-1 AS SHOWN

C1 C3

1- -6	4- -1	3- -1	2- -1	1- -1	DESCRIPTION	MATERIAL	COLOUR	ITEM NO
-	1	1	1	1	NEXTGEN MCON 1.2 LL CPA	PBT-GF30	RED	4
1	1	1	1	1	5POS MCON 1.2 - SEAL	SILOPREN LSR	BLUE	3
1	1	1	1	1	5POS, NEXTGEN MCON 1.2 - PROTEC. COVER	PA6-GF15	BLACK	2
-	1	-	-	-	5POS NEXTGEN MCON 1.2 - RECEPTACLE HSG.- COD D	PBT-GF20	VIOLET	1
-	-	1	-	-	5POS NEXTGEN MCON 1.2 - RECEPTACLE HSG.- COD C	PBT-GF20	BLUE	1
-	-	-	1	-	5POS NEXTGEN MCON 1.2 - RECEPTACLE HSG.- COD B	PBT-GF20	BROWN	1
1	-	-	-	1	5POS NEXTGEN MCON 1.2 - RECEPTACLE HSG.- COD A	PBT-GF20	BLACK	1
C	D	C	C	C	REVISION			
					PARTS LIST			

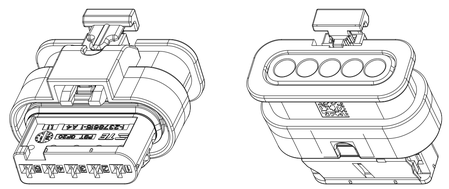

3D VIEW 2:1

TOLERANCES UNLESS OTHERWISE SPECIFIED ACC. TO DIN 16901-140 CENTRIC TO NOMINAL DIMENSION. EDITION 1982-11 SHALL APPLY.
Freimasstoleranzen nach DIN 16901-140 Es gilt die Ausgabe 1982-11.

THIS DRAWING IS A CONTROLLED DOCUMENT.

DIMENSIONS: mm

TOLERANCES UNLESS OTHERWISE SPECIFIED:
0 PLC ±
1 PLC ±0.5
2 PLC ±0.01
3 PLC ±0.001
4 PLC ±0.0001
ANGLES ±

MATERIAL: SEE BOM
FINISH: -

DWN: SZÉKELY LEHEL 17APR2024
CHK: NEMESZ SZILÁRD 18APR2024
APVD: GÁSPÁR SZABOLCS 18APR2024
PRODUCT SPEC: 108-94874
APPLICATION SPEC: 114-94767
WEIGHT: -

TE Connectivity

NAME: 5POS NEXTGEN MCON 1.2LL REC HSG SEALED

SIZE	CAGE CODE	DRAWING NO	RESTRICTED TO
A1	00779	C-2378605	-

CUSTOMER DRAWING | SCALE 4:1 | SHEET 1 OF 1 | REV C4

4805 (3/13)