Dec.1.2017 Copyright 2017 HIROSE ELECTRIC CO., LTD. All Rights Reserved.

	COUNT	DESCRIPTION OF REVISIONS	BY	CHKD	DATE		COUNT	DESCRIPTION OF REVISIONS	BY	CHKD	DATE
△					. .	△					. .
△					. .	△					. .
△					. .	△					. .

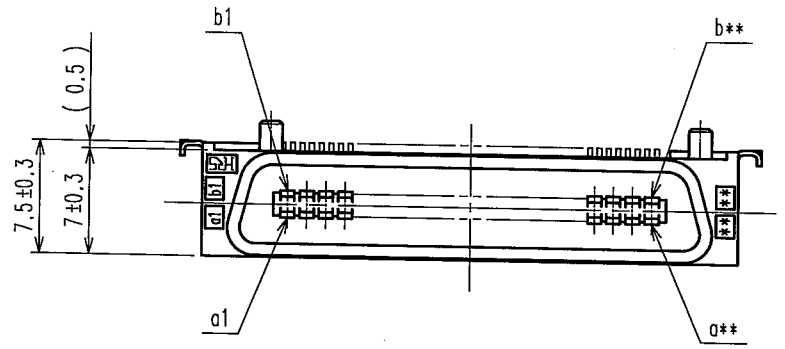

AA(5:1)

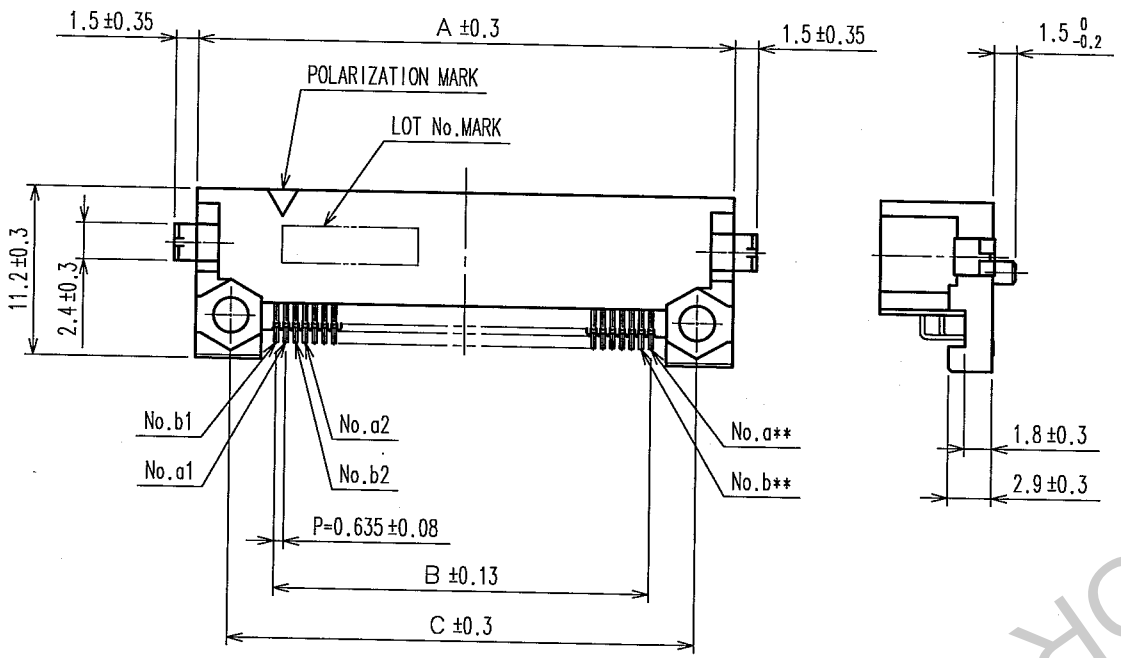

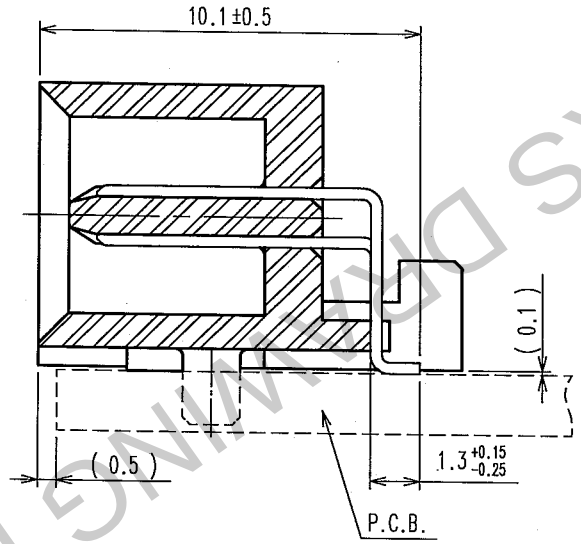

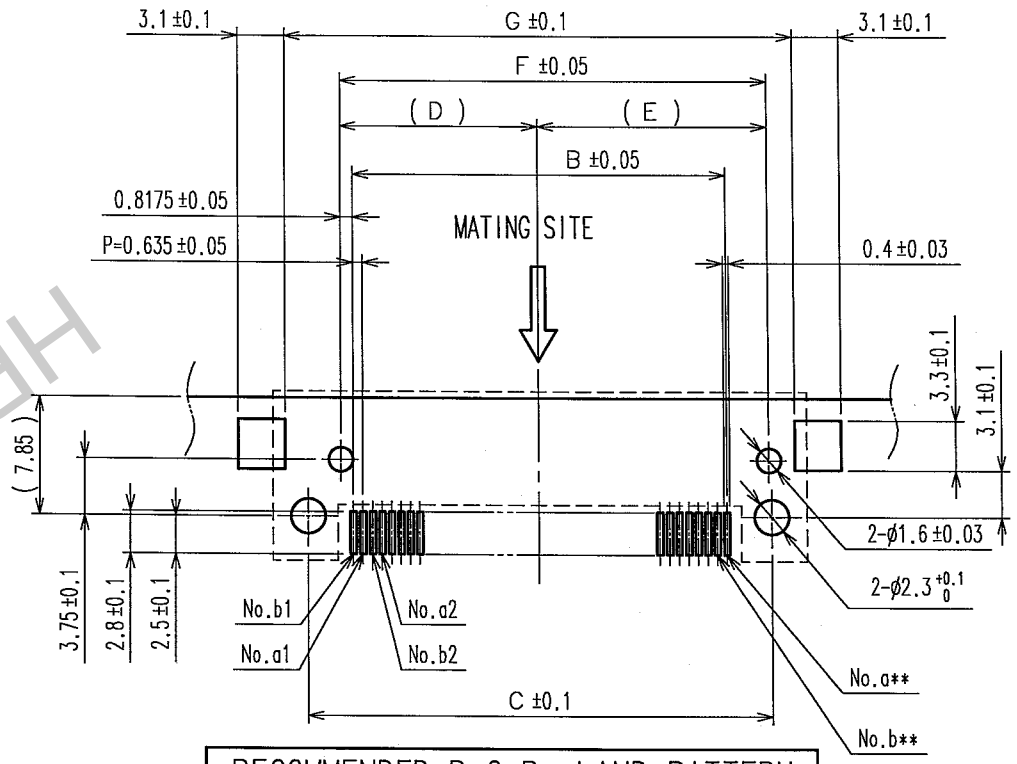

RECOMMENDED P.C.B. LAND PATTERN

MOUNT SIDE (THICKNESS OF APPLICABLE BOARD: t=1.6±0.1)

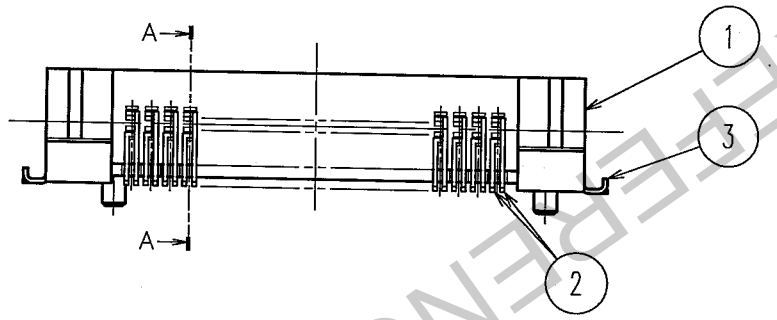

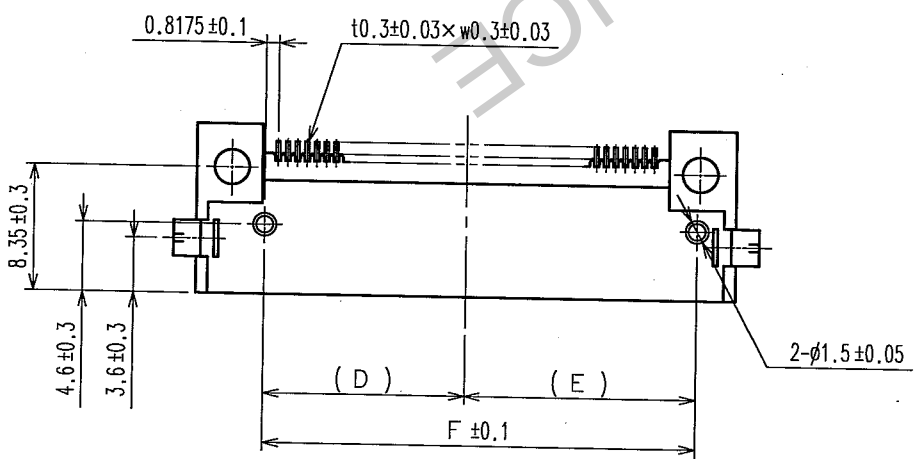

PART No.	CODE No.	3	A	B	C	D	E	F	G	**
FX2-20P-0.635SH(71)	CL572-2761-2-71	20	22.75	12.065	18.05	6.85	8.85	15.70	21.15	10
FX2-40P-0.635SH(71)	CL572-2763-8-71	40	35.45	24.765	30.75	13.20	15.20	28.40	33.85	20
FX2-52P-0.635SH(71)	CL572-2764-0-71	52	43.07	32.385	38.37	17.01	19.01	36.02	41.47	26
FX2-60P-0.635SH(71)	CL572-2765-3-71	60	48.15	37.465	43.45	19.55	21.55	41.10	46.55	30
FX2-80P-0.635SH(71)	CL572-2767-9-71	80	60.85	50.165	56.15	25.90	27.90	53.80	59.25	40
FX2-100P-0.635SH(71)	CL572-2768-1-71	100	73.55	62.865	68.85	32.25	34.25	66.50	71.95	50

NOTE 1. LEAD CO-PLANARITY SHALL BE 0.10 MAX.
2. THE DIMENSIONS IN PARENTHESES ARE FOR REFERENCE.
3 NUMBER OF CONTACTS.

NO.	MATERIAL	FINISH, REMARKS	NO.	MATERIAL	FINISH, REMARKS
3	BRASS	TIN-PLATING	2	BRASS	CONTACT AREA:GOLD 0.2μm min.
1	POLYPHENYLEN SULFIDE	LIGHT BROWN (UL94V-0)			LEAD AREA:TIN-PLATING 2μm min.
					UNDER PLATING:NICKLE 1μm min.

CODE NO.(OLD)	DRAWN	DESIGNED	CHECKED	APPROVED	RELEASED
	T.YANAGISAWA '05.08.05	J.Noda '05.8.6	K.Ogawa '05.08.06	H.Ekawa 05.08.06	. .

SCALE FREE	DRAWING NO. EDC3-152588-21	PART NO. FX2-**P-0.635SH(71)
UNITS mm	HRS HIROSE ELECTRIC CO., LTD	CODE NO. CL572 1/1

FORM NO.229

TO
PCK

HRS DRAWING FOR REFERENCE