

Image may differ from product. See technical specification for details.

# NN 3011 TN/SPW33

## Super-precision double row cylindrical roller bearing with lubrication feature

Super-precision double row cylindrical roller bearings in the NN 30 series provide a unique balance between load carrying capacity, rigidity and speed. Having three flanges on the inner ring and no flanges on the outer ring, the bearings can accommodate axial displacement in both directions. The separable design simplifies mounting and dismounting, particularly when load conditions require both rings to have an interference fit.

- Very high radial load carrying capacity
- High rigidity and high running accuracy
- Minimize noise, vibration and heat generation
- Accommodate axial displacement in both directions
- Lubrication feature

# Overview

## Dimensions

| | |
|---|---|
| Bore diameter | 55 mm |
| Outside diameter | 90 mm |
| Width | 26 mm |

## Performance

| | |
|---|---|
| Basic dynamic load rating | 69.3 kN |
| Basic static load rating | 96.5 kN |
| Attainable speed for grease lubrication | 10 000 r/min |
| Attainable speed for oil-air lubrication | 12 000 r/min |

## Properties

| | |
|---|---|
| Bearing part | Complete bearing |
| Number of rows | 2 |
| Bore type | Cylindrical |
| Cage | Non-metallic |
| Design | NN |
| Number of flanges, outer ring | 0 |
| Number of flanges, inner ring | 3 |
| Loose flange | None |
| Radial internal clearance | C1 |
| Tolerance class | Class SP (SP) |
| Material, bearing | Bearing steel |
| Coating | Without |
| Sealing | Without |
| Lubricant | None |
| Relubrication feature | Annular groove and lubrication holes |
| Indicative carbon footprint for new product | 2.3 kg $CO_2$e |

## Logistics

| | |
|---|---|
| Product net weight | 0.614 kg |
| eClass code | 23-05-09-01 |
| UNSPSC code | 31171505 |

# Technical specification

| | |
|---|---|
| Bore type | Cylindrical |

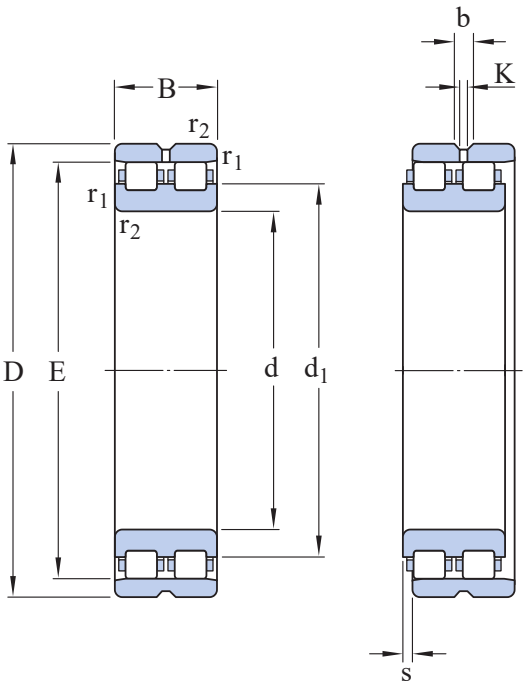


## Dimensions

| | | |
|---|---|---|
| d | 55 mm | Bore diameter |
| D | 90 mm | Outside diameter |
| B | 26 mm | Width |
| $d_1$ | 68.2 mm | Shoulder diameter inner ring (NN design) |
| E | 81 mm | Raceway diameter outer ring (NN design) |
| b | 3.8 mm | Width annular lubrication groove at outer ring |
| K | 2 mm | Diameter lubrication hole (outer ring) |
| $r_{1,2}$ | min. 1.1 mm | Chamfer dimension outer ring |
| s | max. 1.5 mm | Permissible axial displacement from the normal position of one bearing ring relative to the other (all) |

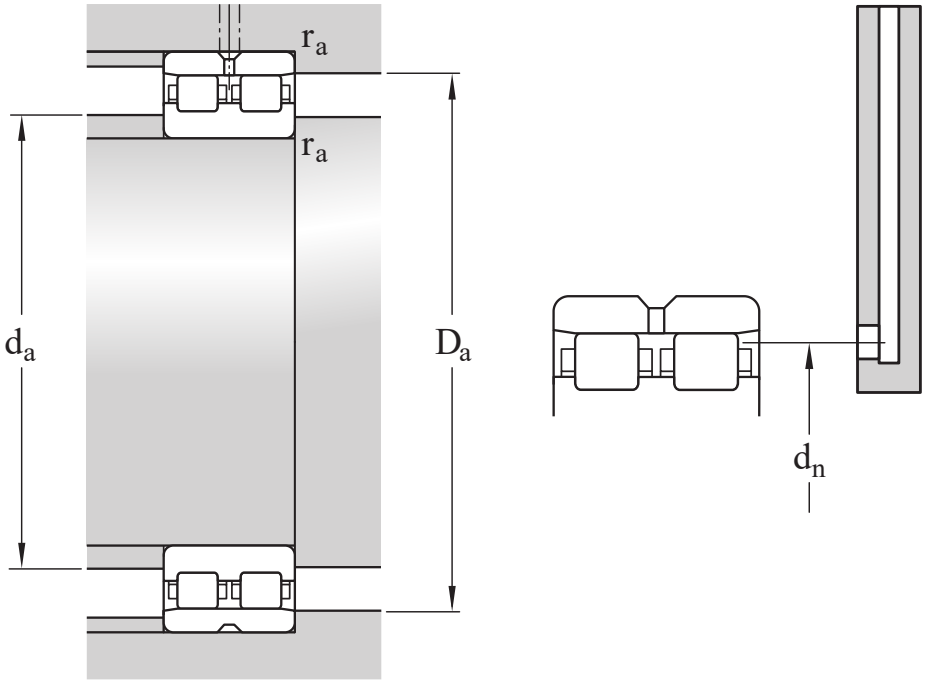


## Abutment dimensions

| | | |
|---|---|---|
| $d_a$ | min. 61.5 mm | Abutment diameter shaft |
| $D_a$ | min. 82 mm | Abutment diameter housing |
| $D_a$ | max. 83.5 mm | Abutment diameter housing |
| $r_a$ | max. 1 mm | Fillet radius |
| $d_n$ | 79.7 mm | Oil nozzle position (not for variants with TNHA cage) |

## Calculation data

| | | |
|---|---|---|
| Basic dynamic load rating | C | 69.3 kN |
| Basic static load rating | $C_0$ | 96.5 kN |
| Fatigue load limit | $P_u$ | 11.6 kN |
| Attainable speed for grease lubrication | | 10 000 r/min |
| Attainable speed for oil-air lubrication | | 12 000 r/min |
| Reference grease quantity | $G_{ref}$ | 3.6 $cm^3$ |
| Static radial stiffness (guideline value) | | 1 220 N/µm |

## Tolerances and clearances

### PRODUCT DETAILS

- Tolerances: SP, UP, SP and UP for 1:12 tapered bore
- Radial internal clearance: table

PRINCIPLES OF BEARING SELECTION AND APPLICATION

- Chamfer dimensions
- Seat tolerances for standard conditions: shafts, housings
- Values for ISO tolerance classes: shafts, housings
- Speed dependent initial grease fill → Initial grease fill

## Compatible products

### Mounting tool

| | |
|---|---|
| Bearing fitting tool kit | TMFT 36 |
| Bearing fitting tool kit, PRO version | TMFT 36/PRO |

# Terms of use

By accessing and using this website / app owned and published by AB SKF (publ.) (556007-3495 · Gothenburg) (“SKF”), you agree to the following terms and conditions:

### Warranty Disclaimer and Limitation of Liability

Although every care has been taken to assure the accuracy of the information on this website / app, SKF provides this information "AS IS" and DISCLAIMS ALL WARRANTIES, EXPRESS OR IMPLIED, INCLUDING, BUT NOT LIMITED TO, IMPLIED WARRANTIES OF MERCHANTABILITY AND FITNESS FOR A PARTICULAR PURPOSE. You acknowledge that your use of this website / app is at your sole risk, that you assume full responsibility for all costs associated with use of this website / app, and that SKF shall not be liable for any direct, incidental, consequential, or indirect damages of any kind arising out of your access to, or use of the information or software made available on this website / app.

Any warranties and representations in this website / app for SKF products or services that you purchase or use will be subject to the agreed upon terms and conditions in the contract for such product or service.

Further, for non-SKF websites / apps that are referenced in our website / app or where a hyperlink appears, SKF makes no warranties concerning the accuracy or reliability of the information in these websites / apps and assumes no responsibility for material created or published by third parties contained therein. In addition, SKF does not warrant that this website / app or these other linked websites / apps are free from viruses or other harmful elements.

### Third Party Services

When viewing YouTube content via the SKF website(s) (i.e. using YouTube API Services), you agree to be bound by the YouTube Terms of Service.

### Copyright

Copyright in this website / app copyright of the information and software made available on this website / app rest with SKF or its licensors. All rights are reserved. All licensed material will reference the licensor that has granted SKF the right to use the material. The information and software made available on this website / app may not be reproduced, duplicated, copied, transferred, distributed, stored, modified, downloaded or otherwise exploited for any commercial use without the prior written approval of SKF. However, it may be reproduced, stored and downloaded for use by individuals without prior written approval of SKF. Under no circumstances may this information or software be supplied to third parties.

This website /app includes certain images used under license from Shutterstock, Inc.

### Trademarks and Patents

All trademarks, brand names, and corporate logos displayed on the website / app are the property of SKF or its licensors, and may not be used in any way without prior written approval by SKF. All licensed trademarks published on this website / app reference the licensor that has granted SKF the right to use the trademark. Access to this website / app does not grant to the user any license under any patents owned by or licensed to SKF.

### Changes

SKF reserves the right to make changes or additions to this website / app at any time.