ALTW
CONFIDENTIAL
2017-11-24
R&D DEPT.

REV.	ECN NO.	DATE	SIGN	DESCRIPTION
B	C230495	2023/4/20	Xian Kun	B *1
C	C230716	2023/06/01	Xian Kun	C *1

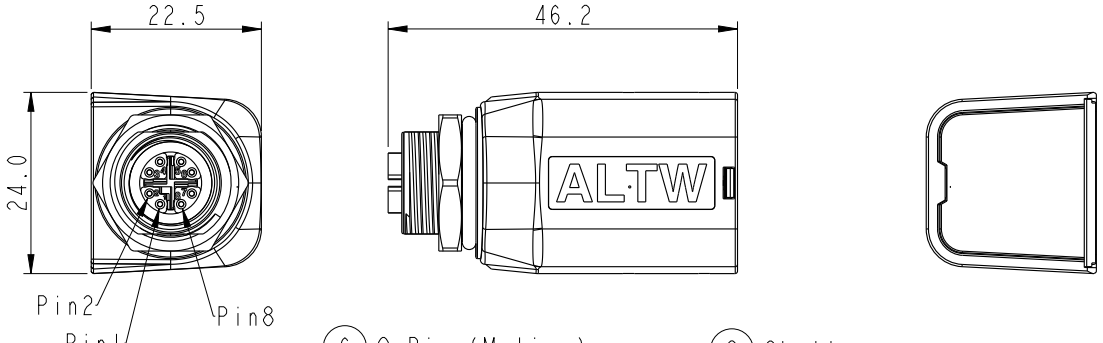

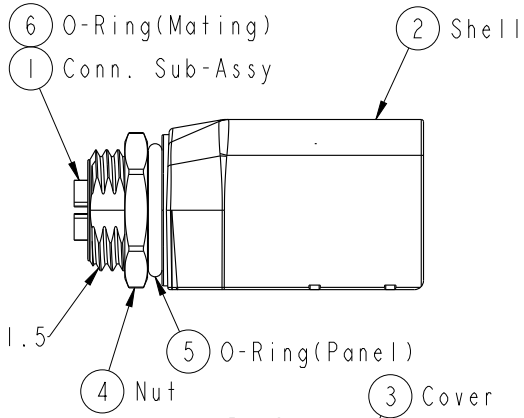

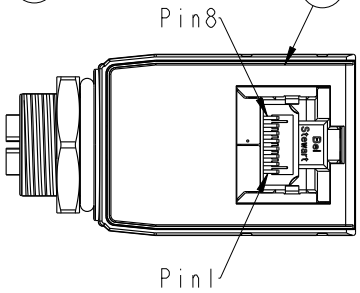

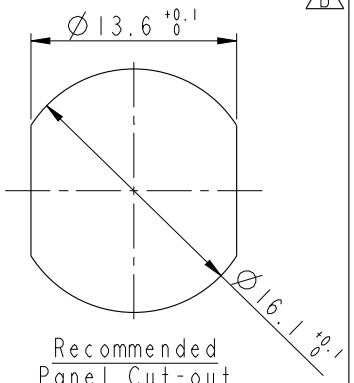

Recommended Panel Cut-out

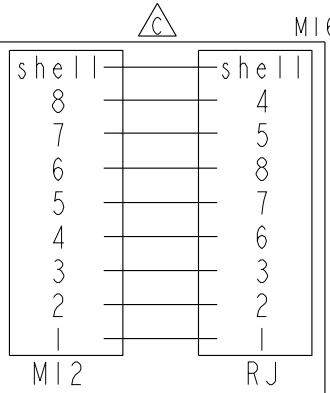

Pin Connection

Note:
* QC Important Dimension to Check.
* Waterproof Rate: IP67 Unmated (M12 side)
* M12 Housing: Nylon+GF, Black
* M12 Female Pin: Copper Alloy, Gold Plated
* RJ45 Contacts: Copper Alloy, Gold Plated
* Shell: Zinc Alloy, Nickel Plated
* Cover: Nylon+GF, Black
* Nut: Zinc Alloy, Nickel Plated
* Temperature Range: -25~+85℃
* Transmission Rate: FLUKE TIA Cat 6A Perm. Link
* Panel Thickness Max.: 3.0mm

UNIT: mm

TOLERANCE
.X ±0.25
.XX ±0.1
.XXX ±0.05
ANGLES ±1°

TITLE: M12 X-code to RJ45 ADAPTER ANGLED

SCALE	SIZE	SHEET
1:1	A4	1 OF 1
REV. C	WC-REV. A.46	QC: Inspection item

Amphenol LTW
安費諾亮泰企業股份有限公司

ITEM NO: RJS-12X08FF-RS7001	DRAWN BY: Gaotong	DATE: 2017/11/24
DWG NO: RJS-12X08FF-RS7001	CHECKED BY: Neo	DATE: 2017/11/24
CUSTOMER: ALTW	APPROVED BY: Max	DATE: 2017/11/24

W10814-03-RM01A2

THIS DOCUMENT IS SUBJECT TO CHANGE WITHOUT NOTICE. IT IS CONFIDENTIAL AND A PROPERTY OF Amphenol LTW. DISCLOSURE TO THIRD PARTY HAS TO BE AUTHORIZED BY Amphenol LTW.