

Image may differ from product. See technical specification for details.

71920 ACE/HCP4ALDGA

Matched set of two super-precision, high-speed E design, single row angular contact ball bearings

These matched sets of two super-precision, high-speed, E design, single row angular contact ball bearings are available in a variety of arrangements. Compared to the equivalent SKF B design high-speed bearings, these have a slightly higher speed capability and can accommodate heavier loads.

- Very high running accuracy
- Accommodate very high speeds

Overview

Dimensions

Bore diameter	100 mm
Outside diameter	140 mm
Width	40 mm
Contact angle	25 °

Performance

Basic dynamic load rating	62.4 kN
Basic static load rating	60 kN
Note	Refer to catalogue data or contact SKF for the attainable speeds

Properties

Contact type	Normal contact (two-point contact)
Number of rows	2
Ring type	One-piece inner and outer rings
Design	High-speed E
Universal matching bearing	Yes, back-to-back (<>), face-to-face (><) or tandem (>>)
Matched arrangement	Universal matching
Number of bearings in matched set	2
Matched condition (axial clearance/ preload)	Light preload
Tolerance class	P4A
Material, bearing	Hybrid (ceramic balls)
Coating	Without
Sealing	Without
Lubricant	None
Special feature	Suitable for direct oil-air lubrication
Indicative carbon footprint for new product	4.9 kg CO_2e

Logistics

Product net weight	1.32 kg
eClass code	23-05-08-03
UNSPSC code	31171531

Technical specification

Universal matching bearing(s)	Yes, back-to-back (<>), face-to-face (><) or tandem (>>)

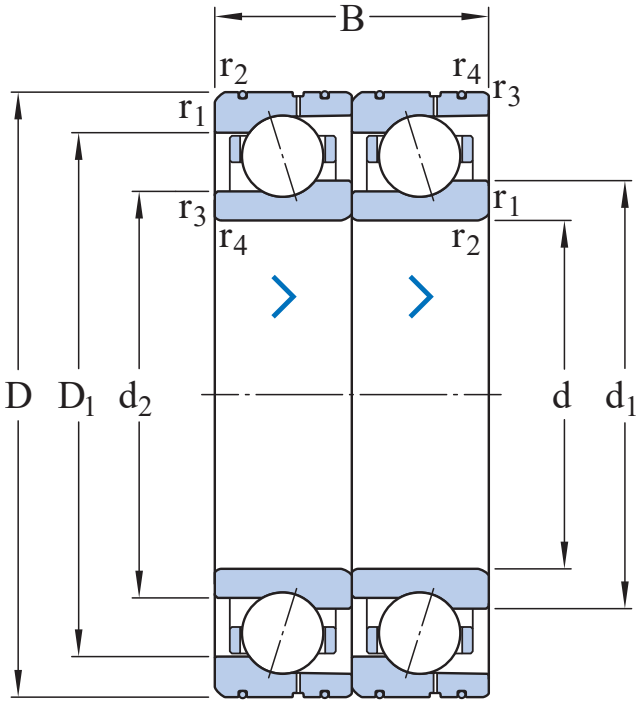

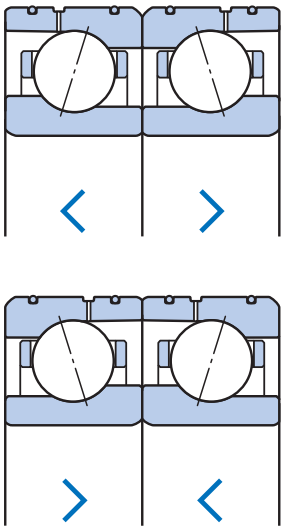

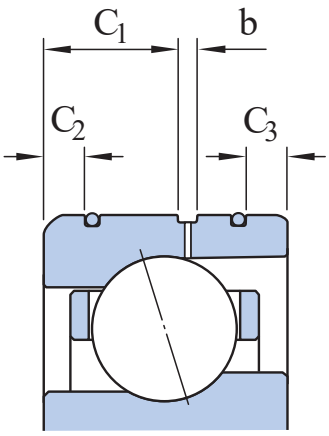

Dimensions

d	100 mm	Bore diameter
D	140 mm	Outside diameter
B	40 mm	Width
d_1	112.4 mm	Shoulder diameter of inner ring (large side face)
d_2	109 mm	Shoulder diameter of inner ring (small side face)
D_1	127.51 mm	Shoulder diameter of outer ring (large side face)
b	2.3 mm	Width of lubrication groove
C_1	10.9 mm	Distance from outer ring side face to lubrication groove / lubrication hole
C_2	3 mm	Distance from outer ring side face to O-ring groove
C_3	3.3 mm	Distance from outer ring side face to O-ring groove
$r_{1,2}$	min. 1.1 mm	Chamfer dimension

$r_{3,4}$	min. 0.6 mm	Chamfer dimension

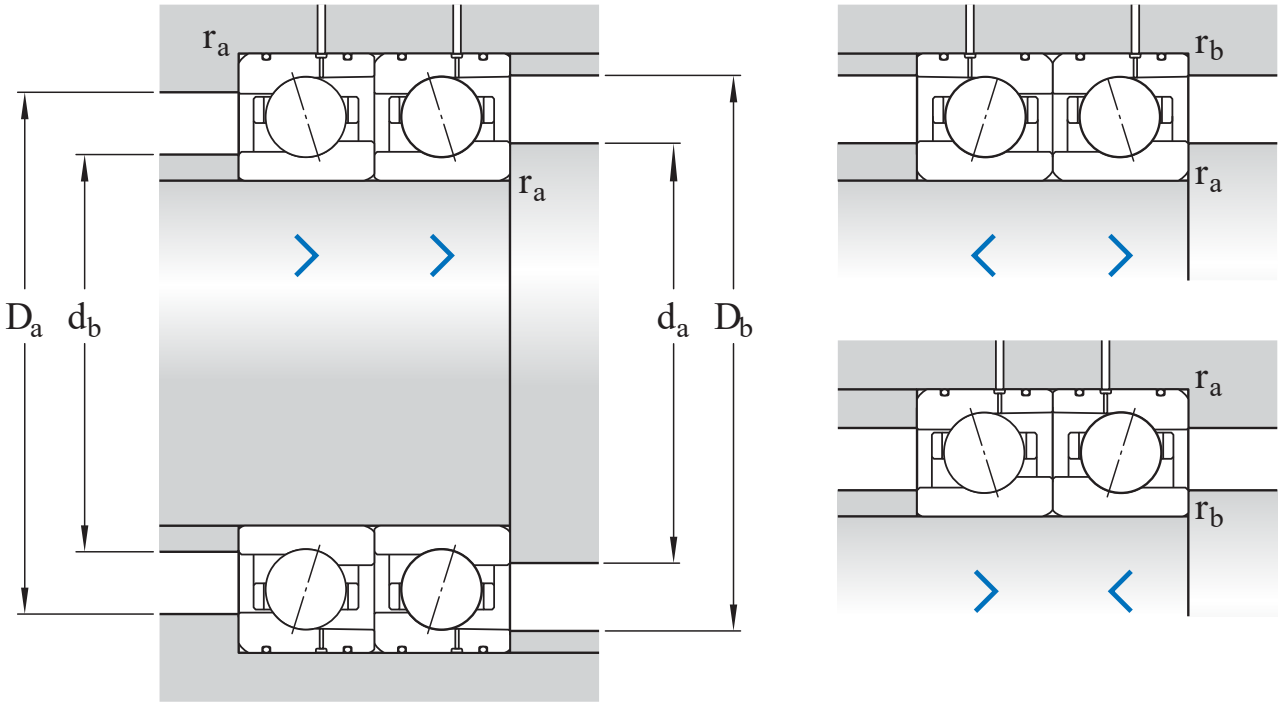

Abutment dimensions

d_a	min. 106 mm	Diameter of shaft abutment
d_b	min. 103.2 mm	Diameter of shaft abutment
D_a	max. 134 mm	Diameter of housing abutment
D_b	max. 136.8 mm	Diameter of housing abutment
r_a	max. 1 mm	Radius of fillet
r_b	max. 0.6 mm	Radius of fillet

Calculation data

Basic dynamic load rating	C	62.4 kN
Basic static load rating	C_0	60 kN
Fatigue load limit	P_u	1.7 kN
Attainable speed for grease lubrication		To be calculated: Single bearing (13700) x speed reduction factor (see table below)
Attainable speed for oil-air lubrication		To be calculated: Single bearing (22000) x speed reduction factor (see table below)
Contact angle	α	25 °
Ball diameter	D_w	12.7 mm
Number of rows	i	2

Number of balls (per bearing)	z	24
Reference grease quantity (per bearing)	G_{ref}	10 cm^3

PRELOAD AND STIFFNESS (BACK-TO-BACK, FACE-TO-FACE)

Preload class		A
Preload	G	332 N
Axial stiffness		207 N/µm

CORRECTION FACTORS FOR PRELOAD CALCULATION

Correction factor dependent on bearing series and size	f	1.2
Correction factor dependent on contact angle	f_1	0.98
Correction factor, preload class A	f_{2A}	1
Correction factor for hybrid bearings	f_{HC}	1

FACTORS FOR EQUIVALENT BEARING LOAD CALCULATION

Calculation factor	e	0.68
Axial load factor (single, tandem)	Y_1	0
Axial load factor (single, tandem)	Y_2	0.87
Axial load factor (single, tandem)	Y_0	0.38
Radial load factor (single, tandem)	X_1	1
Radial load factor (single, tandem)	X_2	0.41
Radial load factor (single, tandem)	X_0	0.5
Axial load factor (back-to-back, face-to-face)	Y_1	0.92
Axial load factor (back-to-back, face-to-face)	Y_2	1.4
Axial load factor (back-to-back, face-to-face)	Y_0	0.76
Radial load factor (back-to-back, face-to-face)	X_1	1
Radial load factor (back-to-back, face-to-face)	X_2	0.67
Radial load factor (back-to-back, face-to-face)	X_0	1

Tolerances and clearances

GENERAL BEARING SPECIFICATIONS

- Tolerances: P4A, P4B, P4, PA9A, P2

PRINCIPLES OF BEARING SELECTION AND APPLICATION

- Chamfer dimensions
- Seat tolerances for standard conditions: shafts, housings
- Values for ISO tolerance classes: shafts, housings
- Speed dependent initial grease fill → Initial grease fill
- Clamping and fitting forces: D design, E design, B design
- Designation suffixes H, H1, L and L1 identify variants for direct oil-air lubrication.

FACTORS FOR EQUIVALENT BEARING LOAD CALCULATION

- Note 1: Single bearings and bearings arranged in tandem
- Note 2: Bearings paired back-to-back or face-to-face

SPEED REDUCTION FACTORS FOR SPEED CALCULATION

Number of bearings	Arrangement	Designation suffix	Speed reduction factors														
		for matched sets	for bearings in the series														
			718 .. D, 719 .. E, and 70 .. E						S70 .. W	719 .. A and 70 .. A	719 .. B and 70 .. B			719 .. D, 70 .. D and 72 .. D			
			for preload class								for preload class			for preload class			
			A	L	B	M	C	F	–	–	A	B	C	A	B	C	D
2	Back-to-back	DB	0,8	–	0,65	–	0,4	–	0,81	0,8	0,83	0,78	0,58	0,81	0,75	0,65	0,4
	Face-to-face	DF	0,77	–	0,61	–	0,36	–	–	–	0,8	0,74	0,54	0,77	0,72	0,61	0,36
3	Back-to-back and tandem	TBT	0,69	0,72	0,49	0,58	0,25	0,36	–	–	0,72	0,66	0,4	0,7	0,63	0,49	0,25
	Face-to-face and tandem	TFT	0,63	0,66	0,42	0,49	0,17	0,24	–	–	0,64	0,56	0,3	0,63	0,56	0,42	0,17
4	Tandem back-to-back	QBC	0,64	–	0,53	–	0,32	–	–	–	0,67	0,64	0,48	0,64	0,6	0,53	0,32
	Tandem face-to-face	QFC	0,62	–	0,48	–	0,27	–	–	–	0,64	0,6	0,41	0,62	0,58	0,48	0,27

For spring-loaded tandem sets, designation suffix DT, a speed reduction factor of 0,9 should be applied.

Compatible products

Aftermarket replacement

Super-precision, high-speed E design, universally matchable single row angular contact ball bearing suitable for direct oil-air lubrication	2 x 71920 ACEGA/HCP4AL *Verify quantity of bearing rows*

Terms of use

By accessing and using this website / app owned and published by AB SKF (publ.) (556007-3495 · Gothenburg) (“SKF”), you agree to the following terms and conditions:

Warranty Disclaimer and Limitation of Liability

Although every care has been taken to assure the accuracy of the information on this website / app, SKF provides this information "AS IS" and DISCLAIMS ALL WARRANTIES, EXPRESS OR IMPLIED, INCLUDING, BUT NOT LIMITED TO, IMPLIED WARRANTIES OF MERCHANTABILITY AND FITNESS FOR A PARTICULAR PURPOSE. You acknowledge that your use of this website / app is at your sole risk, that you assume full responsibility for all costs associated with use of this website / app, and that SKF shall not be liable for any direct, incidental, consequential, or indirect damages of any kind arising out of your access to, or use of the information or software made available on this website / app.

Any warranties and representations in this website / app for SKF products or services that you purchase or use will be subject to the agreed upon terms and conditions in the contract for such product or service.

Further, for non-SKF websites / apps that are referenced in our website / app or where a hyperlink appears, SKF makes no warranties concerning the accuracy or reliability of the information in these websites / apps and assumes no responsibility for material created or published by third parties contained therein. In addition, SKF does not warrant that this website / app or these other linked websites / apps are free from viruses or other harmful elements.

Third Party Services

When viewing YouTube content via the SKF website(s) (i.e. using YouTube API Services), you agree to be bound by the YouTube Terms of Service.

Copyright

Copyright in this website / app copyright of the information and software made available on this website / app rest with SKF or its licensors. All rights are reserved. All licensed material will reference the licensor that has granted SKF the right to use the material. The information and software made available on this website / app may not be reproduced, duplicated, copied, transferred, distributed, stored, modified, downloaded or otherwise exploited for any commercial use without the prior written approval of SKF. However, it may be reproduced, stored and downloaded for use by individuals without prior written approval of SKF. Under no circumstances may this information or software be supplied to third parties.

This website /app includes certain images used under license from Shutterstock, Inc.

Trademarks and Patents

All trademarks, brand names, and corporate logos displayed on the website / app are the property of SKF or its licensors, and may not be used in any way without prior written approval by SKF. All licensed trademarks published on this website / app reference the licensor that has granted SKF the right to use the trademark. Access to this website / app does not grant to the user any license under any patents owned by or licensed to SKF.

Changes

SKF reserves the right to make changes or additions to this website / app at any time.