Surge protection plug - TTC-6P-3-5DC-I-P - 1061386

Please be informed that the data shown in this PDF Document is generated from our Online Catalog. Please find the complete data in the user's documentation. Our General Terms of Use for Downloads are valid
(http://phoenixcontact.com/download)

Surge protection plug with integrated status indicator on the module for a 3-wire floating signal circuit with a high nominal current. Nominal voltage: 5 V DC

Key Commercial Data

Packing unit	1 pc
GTIN	4 055626 714998
GTIN	4055626714998
Weight per Piece (excluding packing)	16.000 g
Custom tariff number	85363010
Country of origin	Germany
Note	Made to Order (non-returnable)

Technical data

Dimensions

Height	39 mm
Width	6.2 mm +0.1 mm
Depth	60.3 mm

Ambient conditions

Ambient temperature (operation)	-40 °C ... 85 °C
Ambient temperature (storage/transport)	-40 °C ... 85 °C
Permissible humidity (operation)	5 % ... 95 %
Altitude	≤ 4000 m (amsl (above mean sea level))
Degree of protection	IP20 (When plugged in)

General

Housing material	PBT
Flammability rating according to UL 94	V-0
Color	light grey RAL 7035

Surge protection plug - TTC-6P-3-5DC-I-P - 1061386

Technical data

General

Mounting type	on base element
Type	Male
Direction of action	Line-Line & Line-Signal Ground/Shield & optional Signal Ground/Shield-Earth Ground

Protective circuit

Nominal voltage U_N	5 V DC
Maximum continuous voltage U_C	5 V DC
Rated current	5 A (55 °C)

Connection data

Connection method	pluggable

Standards and Regulations

Standards/specifications	IEC 61643-21 2000 + corrigendum 2001 + A1:2008, modified + A2:2012
	EN 61643-21 2001 + A1:2009 + A2:2013

Environmental Product Compliance

REACh SVHC	Lead 7439-92-1
China RoHS	Environmentally Friendly Use Period = 50 years
	For details about hazardous substances go to tab “Downloads”, Category “Manufacturer's declaration”

Drawings

Surge protection plug - TTC-6P-3-5DC-I-P - 1061386

Dimensional drawing

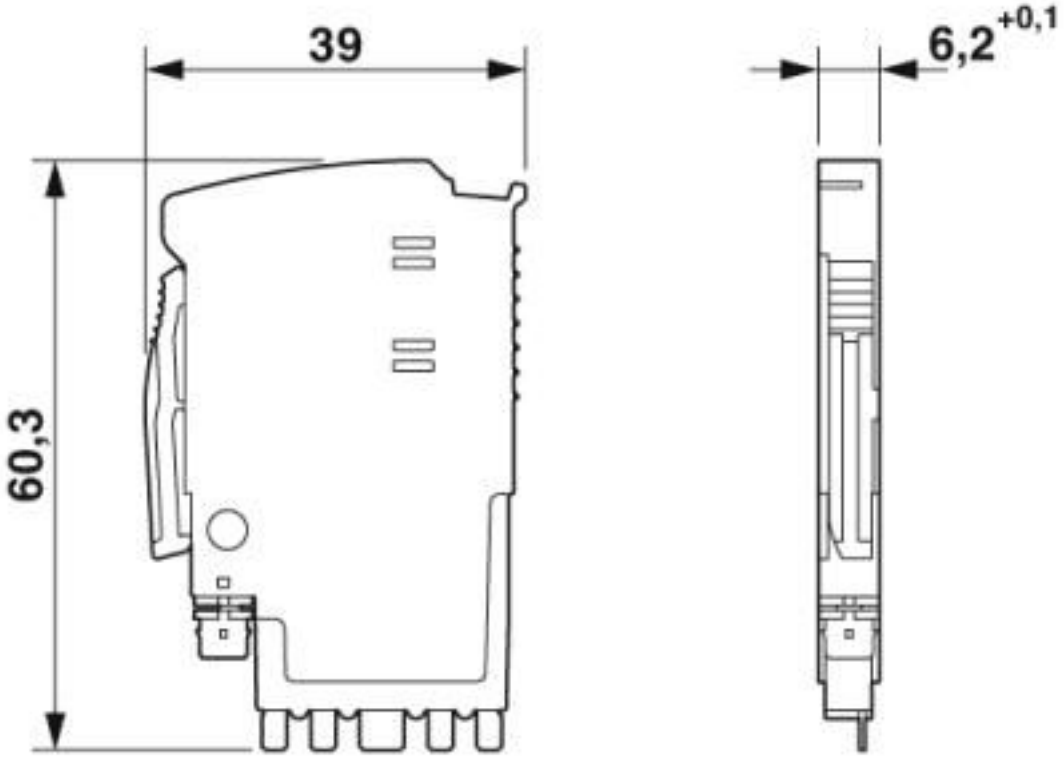

Pictogram

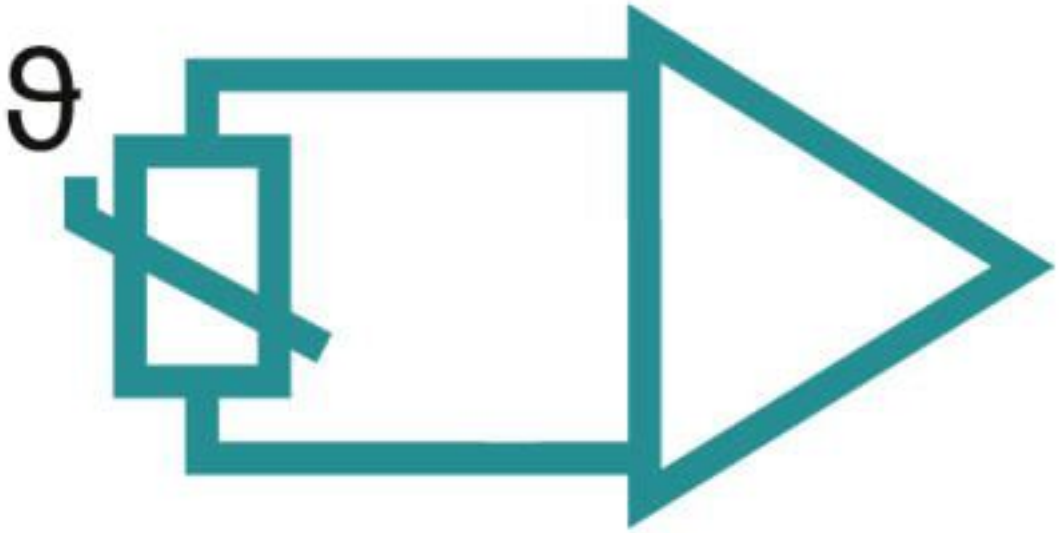

Surge protection plug - TTC-6P-3-5DC-I-P - 1061386

Circuit diagram

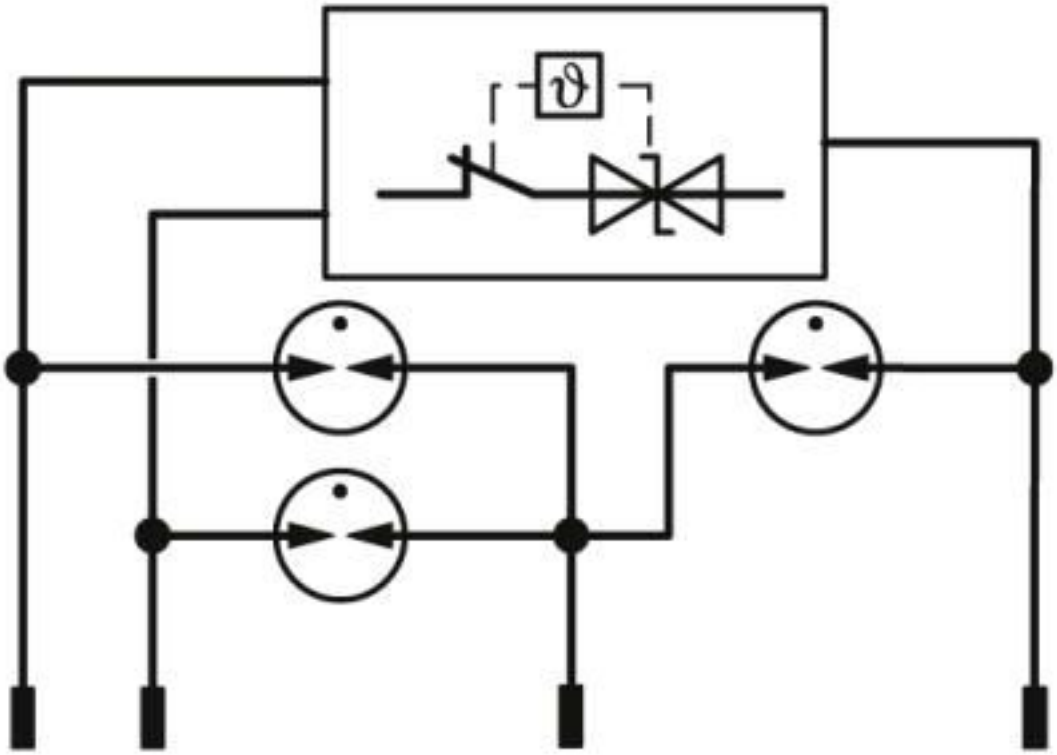

Classifications

eCl@ss

eCl@ss 10.0.1	27130890
eCl@ss 8.0	27130890
eCl@ss 9.0	27130890

ETIM

ETIM 5.0	EC002496
ETIM 6.0	EC002496
ETIM 7.0	EC002496

Approvals

Approvals

Approvals

UL Listed

Ex Approvals

UL Listed / cUL Listed / cULus Listed

Surge protection plug - TTC-6P-3-5DC-I-P - 1061386

Approvals

Approval details

UL Listed		http://database.ul.com/cgi-bin/XYV/template/LISEXT/1FRAME/index.htm	FILE E 138168

Accessories

Accessories

Labeled terminal marker

Zack Marker strip, flat - ZBF 6 CUS - 0825027

Zack Marker strip, flat, Strip, can be ordered: Strip, white, labeled according to customer specifications, mounting type: snap into flat marker groove, for terminal block width: 6.2 mm, lettering field size: 5.15 x 6.15 mm, Number of individual labels: 10

Zack Marker strip, flat - ZBF 6,QR:FORTL.ZAHLEN - 0808765

Zack Marker strip, flat, Strip, white, labeled, Printed vertically: consecutive numbers 1 ... 10, 11 ... 20, etc. up to 91 ... 100, mounting type: snap into flat marker groove, for terminal block width: 6.2 mm, lettering field size: 5.15 x 6.15 mm, Number of individual labels: 10

Marker pen

Marker pen - X-PEN 0,35 - 0811228

Marker pen without ink cartridge, for manual labeling of markers, labeling extremely wipe-proof, line thickness 0.35 mm

Terminal marking

Zack Marker strip, flat - ZBF 6:UNBEDRUCKT - 0808710

Zack Marker strip, flat, Strip, white, unlabeled, can be labeled with: PLOTMARK, CMS-P1-PLOTTER, mounting type: snap into flat marker groove, for terminal block width: 6.2 mm, lettering field size: 5.15 x 6.15 mm, Number of individual labels: 10

Surge protection plug - TTC-6P-3-5DC-I-P - 1061386

Accessories

Zack Marker strip, flat - ZBF 6/WH-100:UNBEDRUCKT - 0808736

Zack Marker strip, flat, Strip, white, unlabeled, can be labeled with: PLOTMARK, CMS-P1-PLOTTER, mounting type: snap into flat marker groove, for terminal block width: 6.2 mm, lettering field size: 5.15 x 6.15 mm, Number of individual labels: 10

Phoenix Contact 2020 © - all rights reserved
http://www.phoenixcontact.com