CODICE P/N	MATERIALE MATERIAL	FINITURA PLATING	SEZ. FILO WIRE SIZE (mm²)	Ø ISOLANTE Ø INSULATION (mm)	±0.2 mm A	B	C	D	IMBALLO (S.P.Q.) / PACKAGING * pz. per box in 6 bobine * pcs. per box in 6 reels
94529-1103	BRONZO FOSFOROSO *PHOSPHOR BRONZE*	PRESTAGNATO *TIN PREPLATED*	0.35-0.50	1.70 max.*	1.9	2.2	2.7	2.7	24.000
94529-1201	OTTONE *BRASS*		0.50-1.00	2.80 max.	3.0	2.9	4.0	4.5	21.000
94529-1203	BRONZO FOSFOROSO *PHOSPHOR BRONZE*								

* FILO AD ISOLAMENTO RIDOTTO
* *LOW INSULATION WIRE*

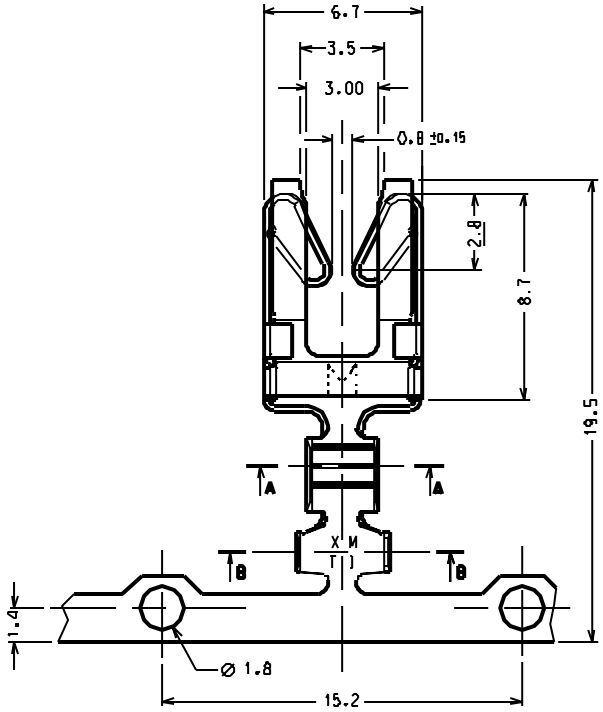

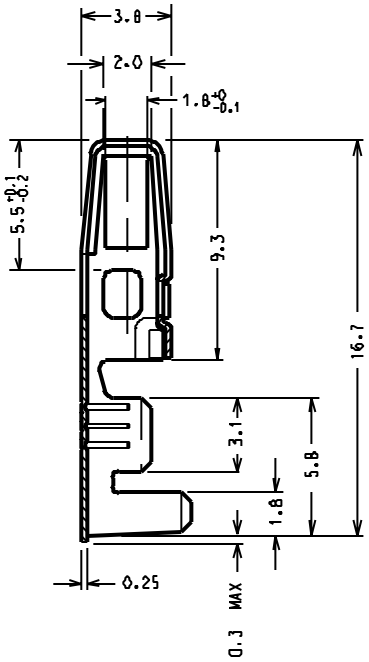

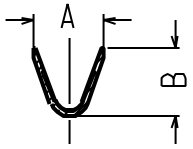

SECTION A - A

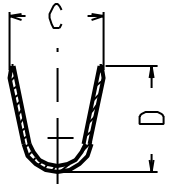

SECTION B - B

CARATTERISTICHE PRODOTTO SECONDO PS-94529-001

PRODUCT CHARACTERISTICS ACCORDING TO PS94529-002

SENSO DI SVOLGIMENTO DALLA BOBINA

DIRECTION OFF REEL

Std. Descr: "FORK TERM STRAIGHT 1.5 GAP (insert WIRE SIZE)"

EC NO. Z2002-0020	DRWN: L.Santessa 04-09-01	CHK'D: N.Tesfaquza 04-09-01	APPR: B.Zuin 04-09-01	DESCRIPTION	QUALITY SYMBOLS: MAJOR M=; SIGNIF. S=; CRITICAL C=	GENERAL TOLERANCES (UNLESS SPECIFIED): mm / INCH — 4 PLACES ±0. / ±.; 3 PLACES ±0. / ±.; 2 PLACES ±0.10 / ±.; 1 PLACE ±0.15 / ±.; ANGULAR: ± 3°	SCALE 5:1	DESIGN UNITS ☐mm ☐INCH	FIRST ANGLE PROJECTION

DRAWN BY & DATE: Gottardo 05-03-93
CHECKED BY & DATE:
APPROVED BY & DATE: Previato 05-03-93
CAD FILENAME: SD94529001.DGN
MATERIAL NO.: vedi tabella
DRAWING NO.: SD-94529-001
SHEET NO.: 1/1
SIZE: A3
REV
DRAFT WHERE APPLICABLE MUST REMAIN WITHIN DIMENSIONS

DIMENSIONS: ☐mm/INCH ☐INCH/mm ☒mm ONLY
SHT | REV
REVISE ON CAD ONLY

TITLE: **CONTATTO A FORCELLA DIRITTO - SPESSORE NOM. DEL MASCHIO: 1.5 mm - STRAIGHT FORK TERMINAL TAB SIZE: 1.5 mm**

MOLEX INCORPORATED

THIS DRAWING CONTAINS INFORMATION THAT IS PROPRIETARY TO MOLEX INCORPORATED AND SHOULD NOT BE USED WITHOUT WRITTEN PERMISSION.