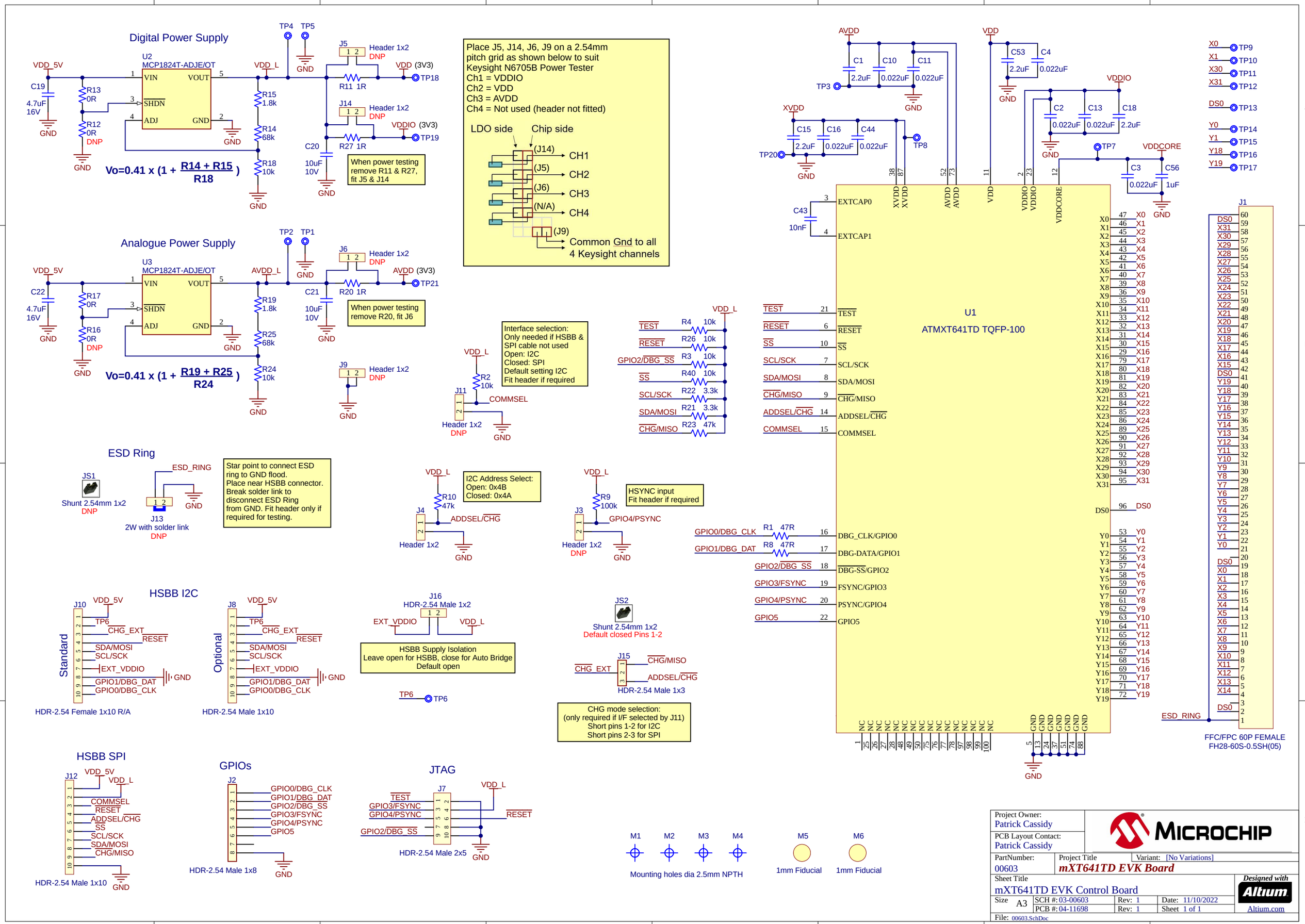

Project Owner: Patrick Cassidy	MICROCHIP
PCB Layout Contact: Patrick Cassidy	
PartNumber: 00603	Project Title: *mXT641TD EVK Board* — Variant: [No Variations]
Sheet Title: mXT641TD EVK Control Board	Designed with Altium — Altium.com
Size A3 — SCH #: 03-00603 — Rev: 1 — Date: 11/10/2022	
PCB #: 04-11698 — Rev: 1 — Sheet 1 of 1	
File: 00603.SchDoc	