Features

- Painted zamak
- Three cable inlet
- Many safety applications
- 90° turnable head with separated actuator
- Interlocking devices conforming to EN ISO 14119 for the control of movable guards, without guard locking function.

RS PRO Limit Switches

RS Stock No.: 0860356

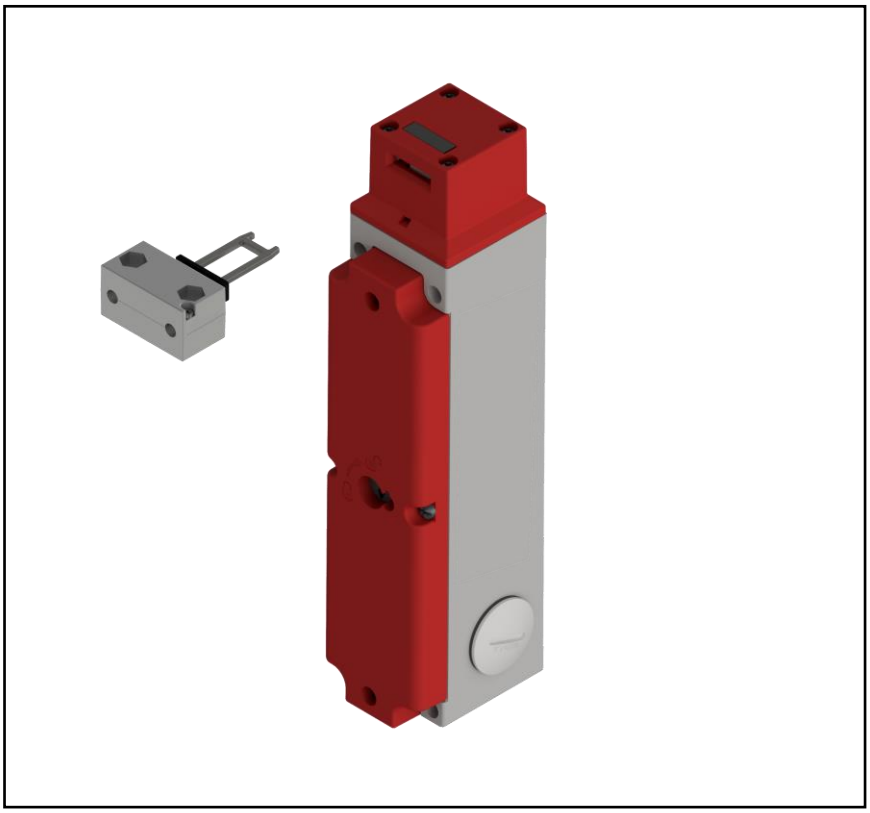

RS PRO is the own brand of RS. The RS PRO Seal of Approval is your assurance of professional quality, a guarantee that every part is rigorously tested, inspected, and audited against demanding standards. Making RS PRO the Smart Choice for our customers.

Limit Switches

Product Description

Electromagnetic device with separated actuator, represents a reliable and actual solution as interlocking device with guard. This electromagnetic safety switch is controlled by a solenoid, which is able to block the actuator and act as safety interlock, in order to prevent the access to the protected area up to the persistence of the dangerous situation.

General Specifications

Actuating Head	Separated actuator (Key included)
Head orientation	0° standard
Normal State Configuration	Actuator: 1NO+1NC Solenoid: 2NC
Principle of operation	Mechanical interlock
Contact Type	Non-overlapping slow action contacts
Colour	Gray-Red
Applications	Various
Interlock type according to EN ISO 14119	Type 2
Encoding level according to EN ISO 14119	Low
Solenoid power supply	24V AC/DC
Auxiliary release	By safety screw

Materials	
Housing Material	Zamak
Head Material	Zamak
Actuator	Steel

Limit Switches

Electrical Specifications

Output Type	Analogue
Rated Insulation Voltage Ui	250V (pollution degree3)
Impulse Withstand Voltage Uimp	2.5KV
Contact rating according to UL 508	B300 Q300
Conventional thermal current in free air Ith (θ min 40 ° C)	10A
Operating currents Ie - AC-15 (50-60 Hz) according to IEC 60947-5-3	24V - 10A / 230V - 4A
DC-13 operating currents according to IEC 60947-5-1	24V - 4A
Resistance Between Contacts	25 mOhm

Mechanical Specifications

Switching Frequency	600 cycles/hour
Maximum switching speed	20 m/min
Connecting Terminals	M3 screw with cable clamp (+,-) pozidriv 1
Connecting Cables Dimensions	0.34 … 1.5 mm2
Electrical connections	Three threaded cable inlets for M20x1.5 cable glands
Min. actuating force (extraction)	15N (30N)
Retention force	2000N
Dimensions	40x190 h50
Weight	1Kg
Mechanical Life (millions of operations)	1
B10d (millions of operations)	4

Operation Environment Specifications

Maximum Operating Temperature	55°C
Minimum Operating Temperature	-25°C
Storage Temperature	-30°C to 80°C

Protection Category

IP Rating	IP65 – IP67
Class of Protection Against Electric Shock	Class II

Classification

eCl@ss Version	-
UNSPSC Version	-

Approvals

Compliance/Certifications	CE - cULus - CCC
Standards Met	IEC 60947-5-1, EN 60947-5-1

Similar Products

Parameters	Stock#	Stock#	Stock#	Stock#
Brand	RS RPO	RS RPO	RS RPO	RS RPO
Actuator Type				
Pole and Throw Configuration				
Normal State Configuration				
Contact Type				
Position Indicator				
Operating Speed				
Output Type				
Maximum Current				
Maximum AC Voltage				
Maximum DC Voltage				
Frequency				
Connection Type				
Terminal Type				
Switches				
Contact Resistance				
Rated Insulation Voltage				
Impulse Withstand Voltage				
Insulation Resistance				
Operating Force				
Mounting Orientation				
Cable Length				
Dimensions				
Length				
Width				
Depth				
Shaft				
Mechanical Life (Minimum)				
Contact Gap				
Weight				
Maximum Operating Temperature				
Minimum Operating Temperature				
Shock Resistance				
Vibration Resistance				
IP Rating				
Class of Protection Against Electric Shock				
Standards Met				
Hazardous Area Certification				

Accessory parts

Bent key	KEY25
Flat key	KEY26
Bent shock-absorbing key	KEY27
Flat shock-absorbing key	KEY28
Adjustable plastic joint key	KEY29
Adjustable metal joint key	KEY29M

CONSTRACTIONAL/SCHEMATIC DIAGRAMS / INSTALLATION METHODS / ILLUSTRATIONS