

Image may differ from product. See technical specification for details.

BEAM 015060 C-2RSH

Super-precision double direction angular contact thrust ball bearing for screw drives, for bolt mounting

These double direction angular contact thrust ball bearings are well suited for screw drive applications, but are also beneficial in other applications, where reliable radial and axial support is required, together with extremely precise axial guidance of the shaft. The BEAM series bearings have an outer ring that is much thicker than with the BEAS series, and they are equipped with through holes for attachment bolts, which makes the mounting process simple.

- Accommodate radial loads, and axial loads in both directions
- Greased and sealed as standard
- Ready to mount
- Easy to relubricate

Overview

Dimensions

Bore diameter	15 mm
Outside diameter	60 mm
Height	25 mm
Contact angle	60 °

Performance

Basic dynamic load rating	20.4 kN
Basic static load rating	33.5 kN
Attainable speed for grease lubrication	4 600 r/min

Properties

Axial load capability	Double-direction
Number of rows	2
Locating feature, bearing outer ring	Bolt holes
Housing washer type (double-row angular contact thrust ball bearings)	One-piece
Cage	Non-metallic
Single bearing, universally matchable, delivered individually	No
Sealing	Seal on both sides
Sealing type	Contact
Lubricant	Grease
Relubrication feature	With
Indicative carbon footprint for new product	1.6 kg CO_2e

Logistics

Product net weight	0.422 kg
eClass code	23-05-08-03
UNSPSC code	31171507

Technical specification

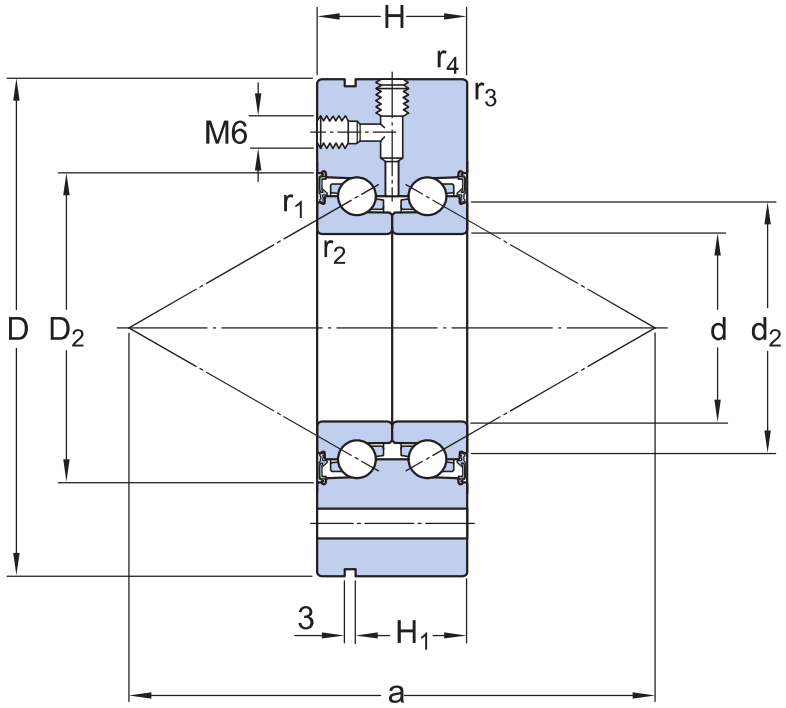

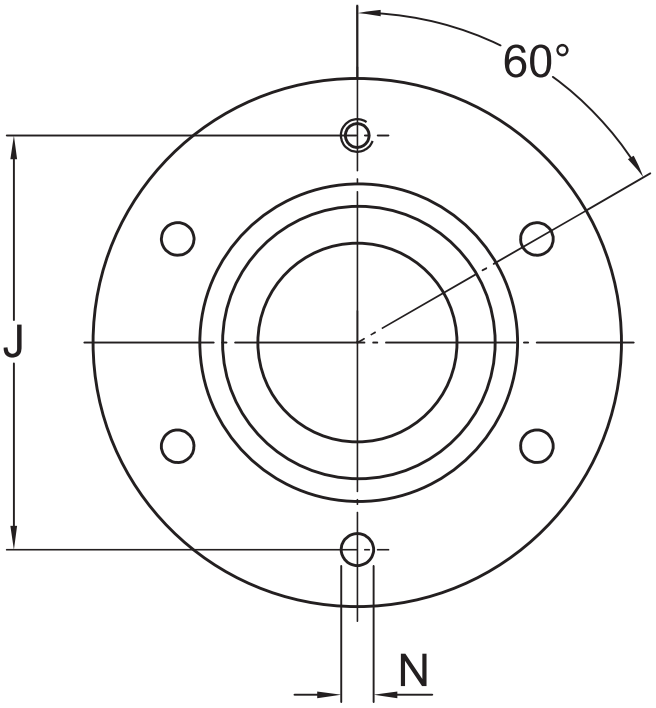

Dimensions

d	15 mm	Bore diameter
D	60 mm	Outside diameter
H	25 mm	Height

d_2	26.7 mm	Inner ring recess diameter
D_2	36.1 mm	Outer ring recess diameter
H_1	17 mm	Extraction groove position
$r_{1,2}$	min. 0.3 mm	Chamfer radius
$r_{3,4}$	min. 0.6 mm	Chamfer radius
a	62 mm	Distance pressure points
J	46 mm	Pitch diameter of holes for bolts
N	6.8 mm	Through hole for attachment bolts

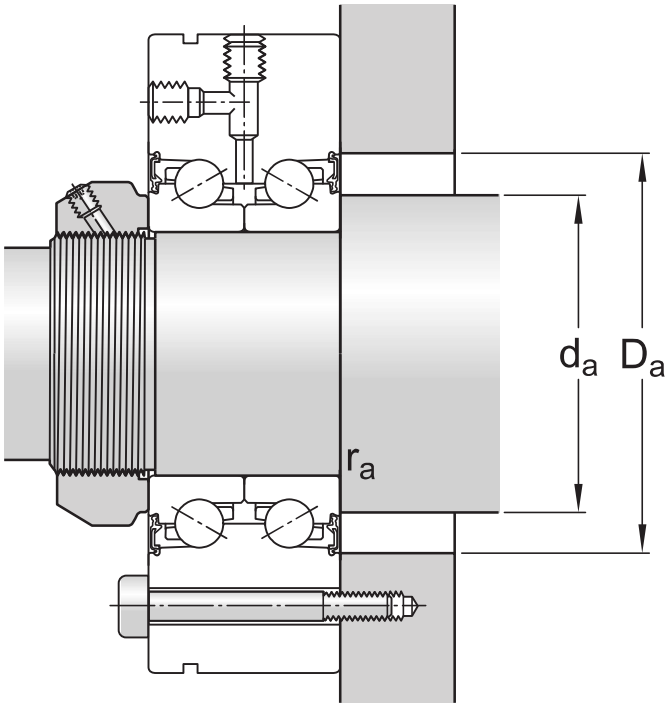

Abutment dimensions

d_a	min. 20 mm	Abutment diameter shaft
D_a	max. 35 mm	Abutment diameter housing
r_a	max. 0.3 mm	Fillet radius

Calculation data

Basic dynamic load rating	C	20.4 kN
Basic static load rating	C_0	33.5 kN
Fatigue load limit	P_u	1.3 kN
Attainable speed		4 600 r/min
Contact angle	α	60 °

Preload		650 N
Frictional moment		0.2 N·m
Axial stiffness for preload A (sets of two brgs back-to-back or face-to-face)		430 N/µm
Static moment stiffness		65 N·m/mrad

Mounting information

Required attachment bolt size (DIN 912)		M6
Number of attachment bolts		5
Angle between holes in outer ring (Pitch)	α	60 °

Tolerances and clearances

PRODUCT DETAILS

- Tolerances: table
- Bearing preload
- Design considerations: shafts, housings

PRINCIPLES OF BEARING SELECTION AND APPLICATION

- Chamfer dimensions
- Speed dependent initial grease fill → Initial grease fill

Terms of use

By accessing and using this website / app owned and published by AB SKF (publ.) (556007-3495 · Gothenburg) (“SKF”), you agree to the following terms and conditions:

Warranty Disclaimer and Limitation of Liability
Although every care has been taken to assure the accuracy of the information on this website / app, SKF provides this information "AS IS" and DISCLAIMS ALL WARRANTIES, EXPRESS OR IMPLIED, INCLUDING, BUT NOT LIMITED TO, IMPLIED WARRANTIES OF MERCHANTABILITY AND FITNESS FOR A PARTICULAR PURPOSE. You acknowledge that your use of this website / app is at your sole risk, that you assume full responsibility for all costs associated with use of this website / app, and that SKF shall not be liable for any direct, incidental, consequential, or indirect damages of any kind arising out of your access to, or use of the information or software made available on this website / app.

Any warranties and representations in this website / app for SKF products or services that you purchase or use will be subject to the agreed upon terms and conditions in the contract for such product or service.

Further, for non-SKF websites / apps that are referenced in our website / app or where a hyperlink appears, SKF makes no warranties concerning the accuracy or reliability of the information in these websites / apps and assumes no responsibility for material created or published by third parties contained therein. In addition, SKF does not warrant that this website / app or these other linked websites / apps are free from viruses or other harmful elements.

Third Party Services
When viewing YouTube content via the SKF website(s) (i.e. using YouTube API Services), you agree to be bound by the YouTube Terms of Service.

Copyright
Copyright in this website / app copyright of the information and software made available on this website / app rest with SKF or its licensors. All rights are reserved. All licensed material will reference the licensor that has granted SKF the right to use the material. The information and software made available on this website / app may not be reproduced, duplicated, copied, transferred, distributed, stored, modified, downloaded or otherwise exploited for any commercial use without the prior written approval of SKF. However, it may be reproduced, stored and downloaded for use by individuals without prior written approval of SKF. Under no circumstances may this information or software be supplied to third parties.

This website /app includes certain images used under license from Shutterstock, Inc.

Trademarks and Patents
All trademarks, brand names, and corporate logos displayed on the website / app are the property of SKF or its licensors, and may not be used in any way without prior written approval by SKF. All licensed trademarks published on this website / app reference the licensor that has granted SKF the right to use the trademark. Access to this website / app does not grant to the user any license under any patents owned by or licensed to SKF.

Changes
SKF reserves the right to make changes or additions to this website / app at any time.