ENGLISH

Datasheet

RS Pro Brushless DC Motor, 24 V dc, 0.15 Nm, 5000 rpm, 4mm Shaft Diameter

RS Stock No: **892-8763**

Product Details

RS Pro brushless DC motor is the perfect solution for many applications due to their compact, flat design which is 45 mm diameter and a length less than 30 mm. It operates at a voltage rating of 24 V dc. The permanent magnets are located on the external rotor that rotates around the internal stator with the windings. In addition to the shorter design, the advantage of this construction compared to internal rotor motors comes from having the same output with lower torque ripple due to the rotor's higher moment of inertia.

Features and Benefits

- Shaft diameter of 4 mm
- Class B insulation
- Hall effect sensors with 120° electrical angle
- Supply voltage of 24 V dc
- 5000 rpm output speed
- Brushless technology
- Current rating of 4.8 A
- 0.15 Nm maximum output torque

RS, Professionally Approved Products, gives you professional quality parts across all products categories. Our range has been testified by engineers as giving comparable quality to that of the leading brands without paying a premium price.

ENGLISH

Specifications:

Core Construction	Permanent Magnet
DC Motor Type	Brushless
Standards Met	CE; RoHS Compliant
Length	18 mm
Shaft Diameter	4 mm
Current Rating	4.8 A
Dimensions	42.8 (dia.) x 18 mm
Maximum Output Torque	0.05 Nm
Output Speed	5000 rpm
Supply Voltage	24 V dc
Peak Current	4.8 A
Peak Torque	0.15 Nm

RS, Professionally Approved Products, gives you professional quality parts across all products categories. Our range has been testified by engineers as giving comparable quality to that of the leading brands without paying a premium price.

ENGLISH

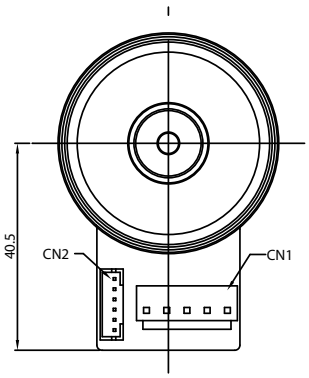

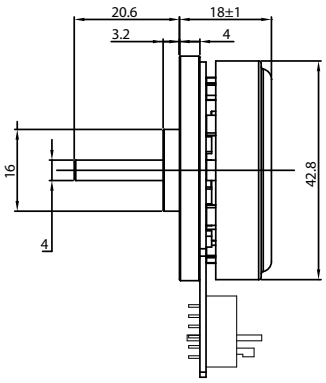

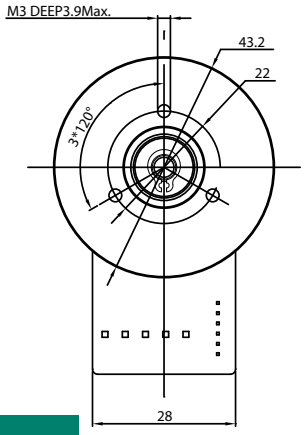

Characteristics

Hall effect angle
120 ° electric angle

Shaft run out
0,03 mm

Insulation Class
B

Radial play
0,02 mm (450 g load)

Axial play
0,08 mm (450 g load)

Max radial force
28N 10mm from flange

Max axial force
10N

Dielectric Strength
500 VDC for one minute

Insulation Resistance
100 M ohm min. 500 VDC

Specification

	Model		8928763	
1	N° of pole		16	
2	N° of phase		3	
3	Rated Voltage	V	24	
4	Rated Speed	RPM	5000	
5	Rated Torque	Nm	0,05	
6	Max Peak Torque	Nm	0,15	
7	Torque Constant	Nm/A	0,031	
8	Line to Line Resistance	Ω	1,83	
9	Line to Line inductance	mH	0,74	
10	Max Peak Current	A	4,8	
11	Length	mm	18	
12	Rotor Inertia	g-cm^2	99	
13	Weight	Kg	0,08	

Connection

PIN N°	CONNECTOR	FUNCTION
1	JST B5P	GND
2	JST B5P	Phase U
3	JST B5P	Phase V
4	JST B5P	Phase W
5	JST B5P	GND
1	JST B6B	GND
2	JST B6B	.+ 5V DC
3	JST B6B	Hall A
4	JST B6B	Hall B
5	JST B6B	Hall C
6	JST B6B	GND

RS, Professionally Approved Products, gives you professional quality parts across all products categories. Our range has been testified by engineers as giving comparable quality to that of the leading brands without paying a premium price.