REV.	ECN NO.	DATE	SIGN	DESCRIPTION
A	-	2025/01/07	Zed Tseng	New Initial.

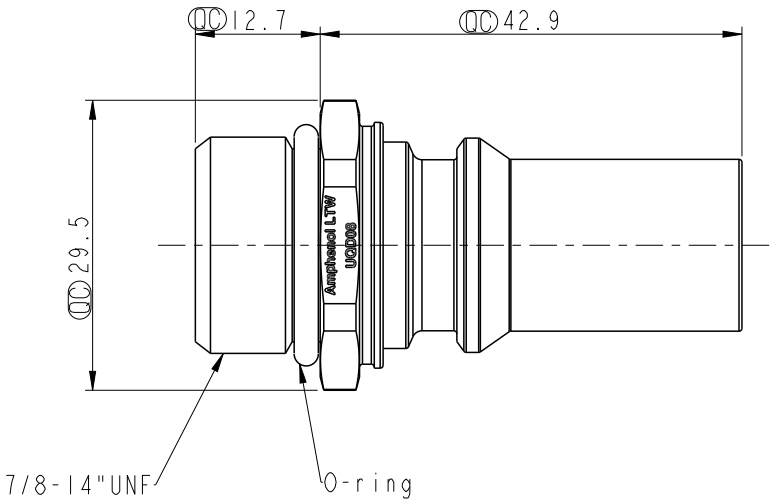

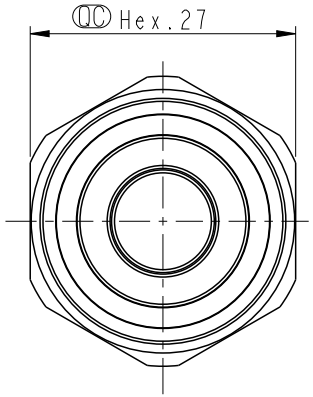

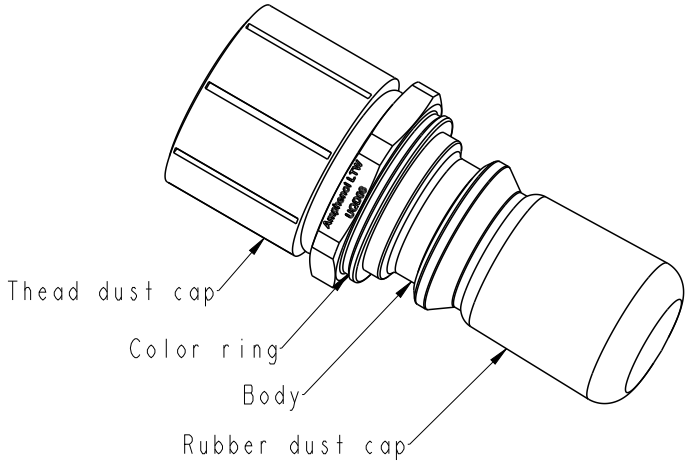

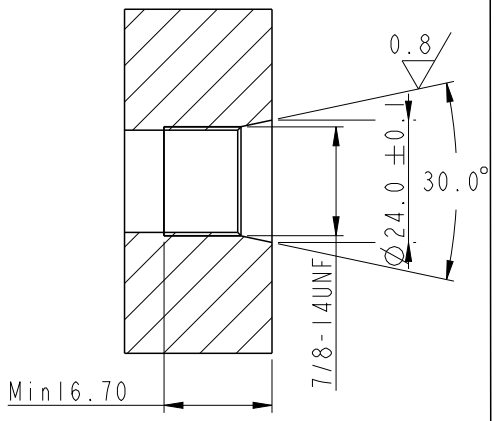

Recommended
Panel Cut-Out

SQD-08PAGM-PXX001

RD:Red
BE:Blue

Note:
* ROHS Compliant
* QC Important dimension
* Body Material: Stainless steel
* O-ringl: Rubber, Black
* Connection Type: 7/8"-14 UNF male thread
* Color ring: Thermoplastic, Red or blue
* Rubber dust cap: Thermoplastic, Black
* Thread dust cap:Thermoplastic, Yellow
* Nominal Diameter: DN10
* Weight: 78.3G / PCS

UNIT:mm	TITLE: SNAPQD, PLUG 7/8"-14 UNF Male Thread		ITEM NO	DRAWN BY: Zed Tseng	DATE: 2025/01/07
TOLERANCE ±0.5	SCALE: NA	SIZE: A4	SHEET 1 OF 1	DWG NO: SQD-08PAGM-PXX001	CHECKED BY: Vic Lee	DATE: 2025/01/07
	REV.: A	WC-REV.: .0	QC:Inspection item	CUSTOMER: ALTW	APPROVED BY: Fred Lee	DATE: 2025/01/07

Amphenol LTW
安費諾亮泰企業股份有限公司

THIS DOCUMENT IS SUBJECT TO CHANGE WITHOUT NOTICE. IT IS CONFIDENTIAL AND A PROPERTY OF Amphenol LTW. DISCLOSURE TO THIRD PARTY HAS TO BE AUTHORIZED BY Amphenol LTW.