Future Technology Devices International

Datasheet

ME810A-HV35R Display Module

General Purpose Multi Media Controller

1 Introduction

The ME810A-HV35R is a development module for FTDI's FT810, Embedded Video Engine (EVE) graphics controller IC. This module behaves as an SPI slave, and requires a SPI Master for proper micro-controller interface and system integration.

The ME810A-HV35R module includes a 3.5 inch 320*480, portrait TFT LCD panel with resistive touch screen and buzzer for audio output. Users can also connect to different LCD screens which meet the FT810 technical specification and fit with the ME810A-HV35R LCD interface connector.

1.1 Features

The ME810A-HV35R utilises the FTDI FT810 Embedded Video Engine. Graphic, audio and touch features of the FT810 can be accessed with the ME810A-HV35R. For a full list of the FT810's features, please see the FT81x datasheet.
The ME810A-HV35R has the following features:

- Ready to use LCD module.
- Supports resistive touch with pressure sensing.
- Supports portrait and landscape display mode.
- Supports mono audio output.
- On board LCD backlight LED driver.
- On board buzzer with a transistor control.
- +3.3V single power supply.
- Supports configurable LCD with 4-line SPI.
- Direct connect with MM900EV module series as a display module.
- Bezel with four mounting holes for system assembly.

Copyright © 2015 Future Technology Devices International Limited

2 Ordering Information

Part No.	Description
ME810A-HV35R-BK	FT810 module, with FPC/FFC 50 LCD connector, 3.5 inch TFT LCD display panel preinstalled with resistive touch. Black bezel.
ME810A-HV35R-PL	FT810 module, with FPC/FFC 50 LCD connector, 3.5 inch TFT LCD display panel preinstalled with resistive touch. Pearl bezel.

Table 2-1 – Ordering information

Note: This module is recommended as an accessory to the **MM900EV series** (due Nov 2015) for development purposes. For more information on the **MM900EV series**, refer to: http://www.ftdichip.com/Products/ICs/FT90x.html.

Copyright © 2015 Future Technology Devices International Limited

Table of Contents

1 Introduction 1
1.1 Features 1
2 Ordering Information 2
3 Board Interface Description 4
3.1 Board Profile 4
3.2 J1- SPI interface and control signals 5
3.3 JP1- On board buzzer enable 5
4 Application Example 6
4.1 Getting Start With an MM900EV Module 6
4.2 Hardware Setup 6
4.3 Software Setup 7
5 Mechanical Dimensions 8
5.1 J1 Pin Header Dimensions 8
5.2 Bezel Mechanical Drawing 9
5.3 Board Schematics 10
6 Specifications 11
6.1 Electrical Specification 11
6.2 Display Specification 11
6.3 Optical Specification 12
7 Contact Information 13
Appendix A - References 14
Appendix B - List of Figures and Tables 15
Appendix C – Revision History 16

Copyright © 2015 Future Technology Devices International Limited

3 Board Interface Description

The ME810A-HV35R module is intended for direct use into existing applications that require a display. This module is suitable for interfacing with an external microcontroller (e.g. MM900EV series) that has a SPI Master channel.

3.1 Board Profile

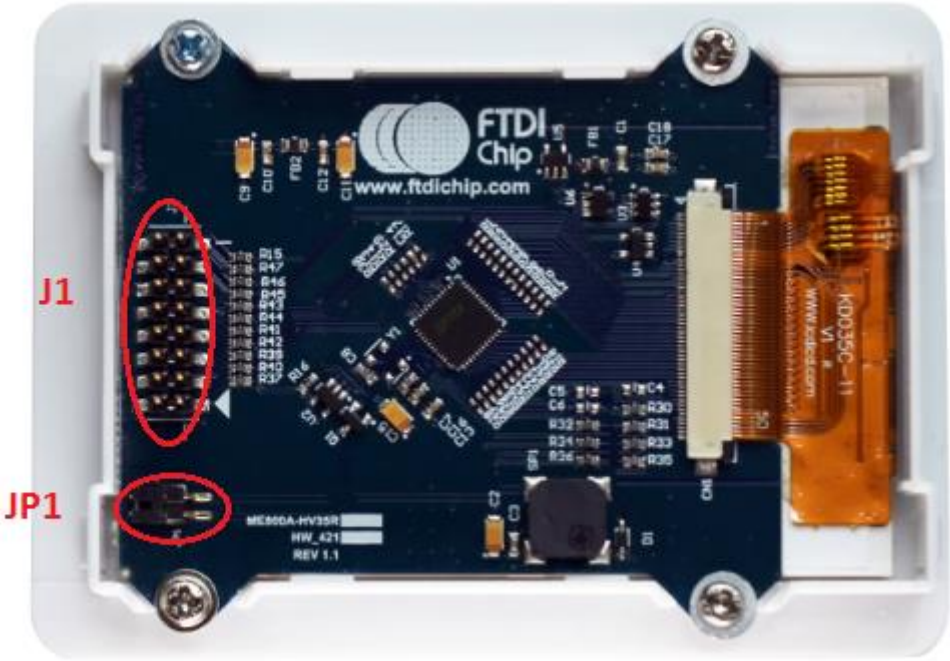

Figure 3-1 – ME810A-HV35R board bottom view

Copyright © 2015 Future Technology Devices International Limited

3.2 J1- SPI interface and control signals

Pin No.	Name	Type	Description
1	J1_SCK	I	SPI clock input
2	J1_CS0#	I	FT810 SPI chip select, active low
3	J1_MISO	I/O	SPI master input, slave output or QSPI IO1
4	J1_MOSI	I/O	SPI master output, slave input or QSPI IO0
5	J1_IO3	I/O	FT810 GPIO1 or QSPI IO3
6	J1_IO2	I/O	FT810 GPIO0 or QSPI IO2
7	J1_DCX	I	LCD panel data / command selection pin Low: Command High: Parameter
8	J1_CS1#	I	LCD panel SPI chip select, active low
9	J1_3V3	P	3.3V power supply input
10	J1_5V	P	NC
11	GND	P	Ground
12	GND	P	Ground
13	J1_PD#	I	FT810 powers down input, active low. Connect to 3.3V if not used.
14	J1_INT#	O	FT810 interrupts output, active low. On board 10kΩ pull-up to 3.3V.
15	J1_AUDL	O	FT810 PWM audio output
16	J1_DISP	I	LCD display reset. Connect to GND if not used.

Table 3-1 – J1 Pinout

3.3 JP1- On board buzzer enable

Jumper fitted by default. Remove the jumper to disable the buzzer.

Copyright © 2015 Future Technology Devices International Limited

4 Application Example

4.1 Getting Start With an MM900EV Module

As a quick start with the ME810A-HV35R development board, connecting to an MM900EV module development platform is recommended. Demo applications are provided for users to experiment and experience the FT810 in the ME810A system. The following paragraphs provide a short description for development procedures.

The MM900EV series of FT900 MCU evaluation platforms allows user to develop various applications with rich peripheral interfaces. The following MM900EV modules are compatible:

- **MM900EV1A**: with a 32-bit high performance FT900 MCU, 10/100Mbps Ethernet, USB2.0 Host, USB2.0 Device, SD3.0, Audio Codec, SPI Master Quad Interface, and 40-pin external GPIOs.
- **MM900EV-Lite**: Tiny board with a 32-bit high performance FT900 MCU, USB2.0 Device, SD3.0, SPI Master Quad Interface, and 40-pin external GPIOs.

Detailed information of MM900EV module can be found at:

http://www.ftdichip.com/Products/ICs/FT90x.html

4.2 Hardware Setup

Figure 4-1 shows the ME810A-HV35R module connected to an MM900EV-Lite module.

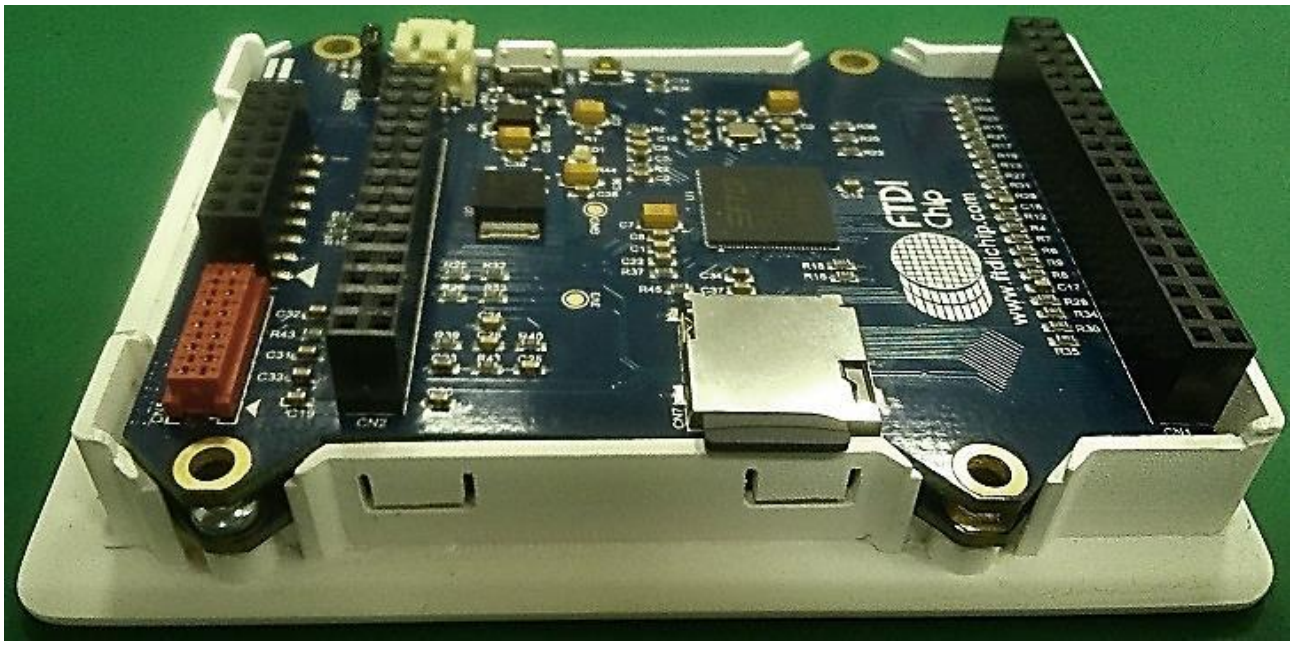

Figure 4-1 – ME810A-HV35R connects to MM900EV Module

Copyright © 2015 Future Technology Devices International Limited

- The ME810A-HV35R **J1** pin header connects to the MM900EV module **J2** dual-enter socket (See Table 4-1 for pin mapping).
- Connect a USB cable or Power Supply to the MM900EV module to power the system.

Pin number	J1 Signal	J2 Signal
1	J1_SCK	SPIM_SCK
2	J1_CS0#	SPIM_SS0
3	J1_MISO	SPIM_MISO
4	J1_MOSI	SPIM_MOSI
5	J1_IO3	SPIM_IO3
6	J1_IO2	SPIM_IO2
7	J1_DCX	DCX
8	J1_CS1#	CS1#
9	J1_3V3	VDD_3V3
10	NC	VDD_5V
11	GND	GND
12	GND	GND
13	J1_PD#	PWD#
14	J1_INT#	INT#
15	J1_AUDL	AUD_LIN
16	J1_DISP	DISP

Table 4-1 – ME810A-HV35R J1 and MM900EV module J2 connection

4.3 Software Setup

- Download the FT90x toolchain and sample application for ME810A-HV35R from the FTDI website at http://www.ftdichip.com/Products/ICs/FT90x.html.
- Install the FT90x toolchain on a Windows PC.
- Download the sample application binary file to the MM900EV module.

The sample applications will demonstrate display, touch and audio functions of the ME810A-HV35R module. Refer to AN_381_ME810A_HV35R_Sample_Application for more details.

Copyright © 2015 Future Technology Devices International Limited

5 Mechanical Dimensions

5.1 J1 Pin Header Dimensions

J1 pin header is a 2x8 way, 2.54mm pitch vertical pin. The Figure 6-2 illustrates the first pin dimensions and pin header parameters (in millimeters).

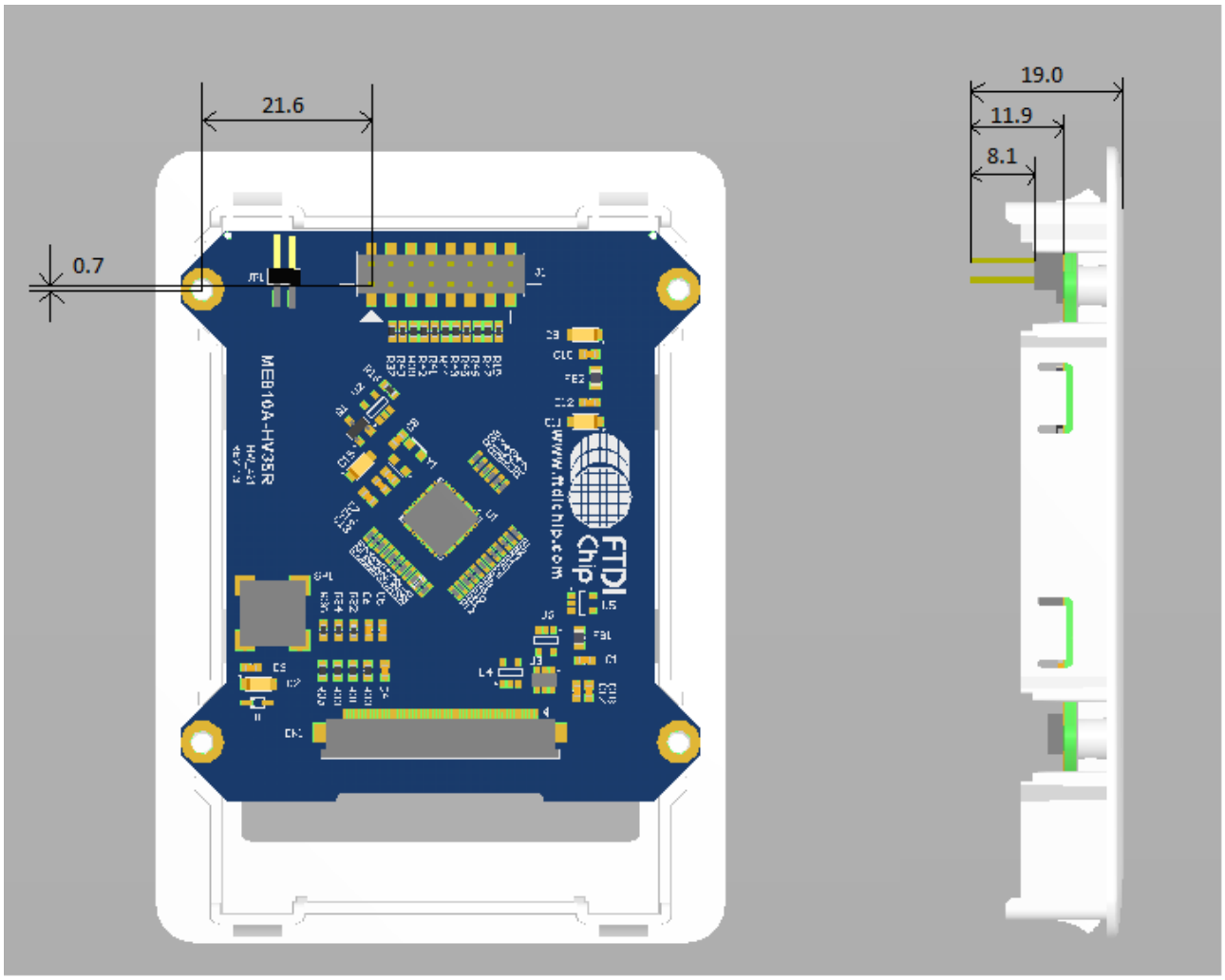

Figure 5-1 – J1 Pin Header Dimensions

Copyright © 2015 Future Technology Devices International Limited

5.2 Bezel Mechanical Drawing

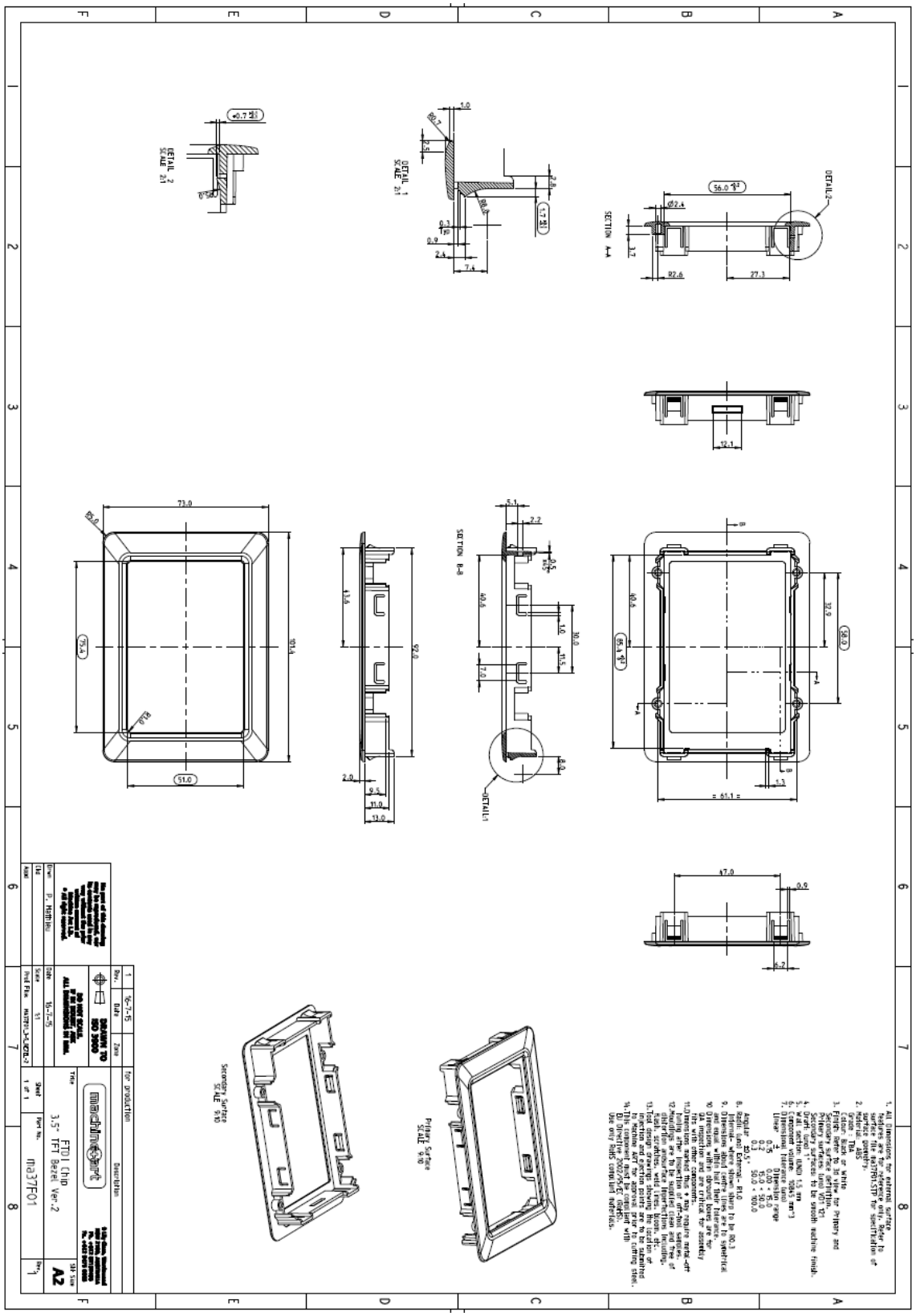

Figure 5-2 – Bezel dimensions

Copyright © 2015 Future Technology Devices International Limited

5.3 Board Schematics

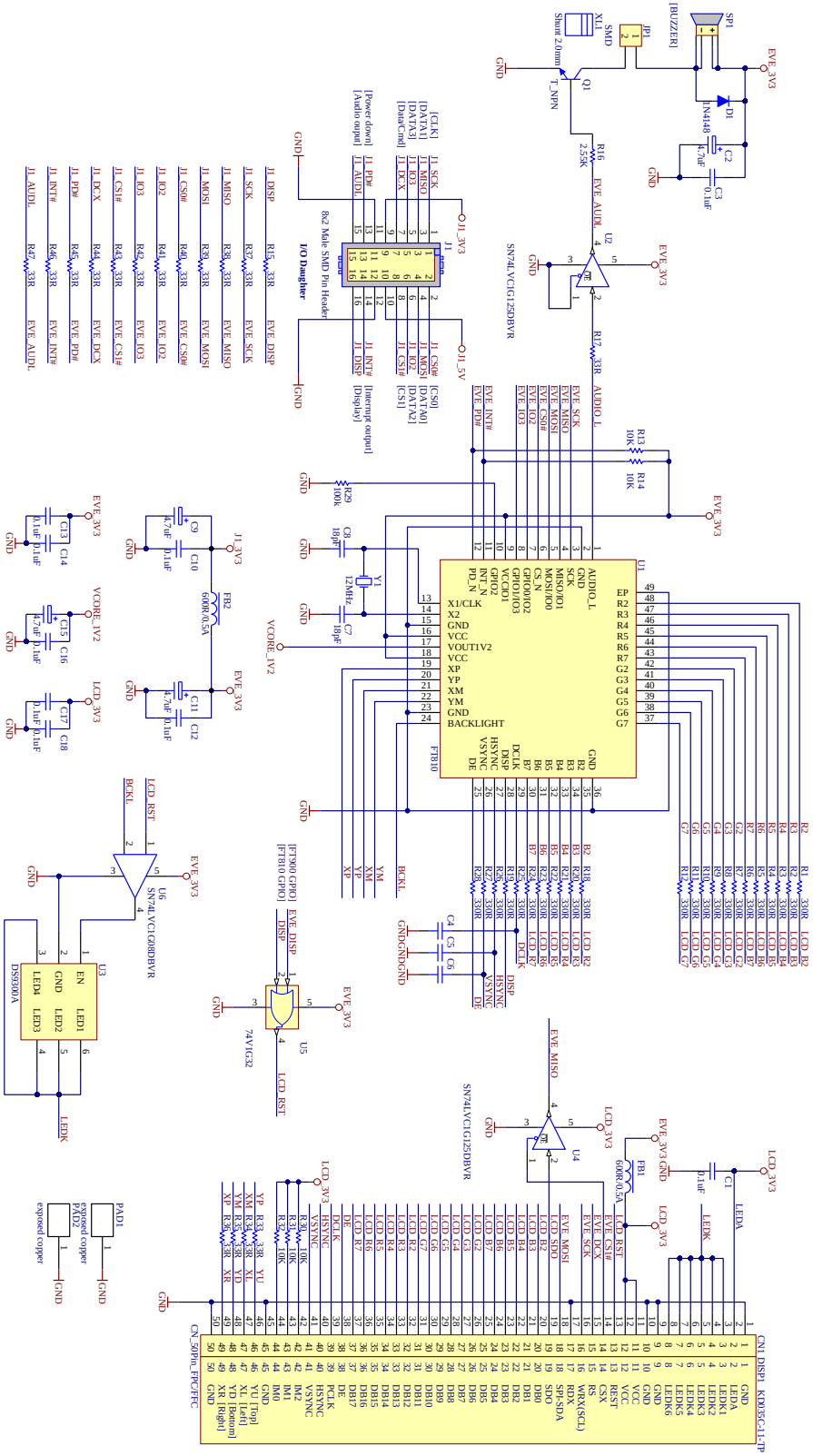

Figure 5-3 – Board Schematic

Copyright © 2015 Future Technology Devices International Limited

6 Specifications

6.1 Electrical Specification

Parameter	Description	Minimum	Typical	Maximum	Units	Notes
VCC	VCC operating supply voltage	3.0	3.3	3.6	V	J1 pin 9
Icc	VCC operating current		110		mA	Backlight LED on
Voh	Output Voltage High	VCC-0.4	-	-	V	
Vol	Output Voltage Low	-	-	0.4	V	
Vih	Input High Voltage	2.0	-	-	V	
Vil	Input Low Voltage	-	-	0.8	V	
T	Operating temperature	-20	-	+70	℃	

Table 6-1 - Operating Voltage and Current

6.2 Display Specification

Item	Spec	Units	Notes
Display area(AA)	49.0(H) * 73.4(V)	mm	3.5 inch diagonal
Driver Element	TFT active matrix	mA	
Display Colors	262K	-	
Number of Pixels	320(RGB)*480	dots	
Pixel pitch	0.051(H) * 0.051(V)	mm	
Viewing Angle	6:00	o'clock	
Display mode	Transmissive/ Normally White	-	
LCD Luminance	100	cd/m^2	
Touch screen	resistive	-	

Table 6-2 - LCD and Touch Information

Copyright © 2015 Future Technology Devices International Limited

6.3 Optical Specification

Item		Symbol	Conditions	Specifications Min.	Typ.	Max.	Unit	Note
Transmittance		T%	Viewing normal angle $\theta_X = \theta_Y = 0°$		5.5		%	All left side data are based on CMO's following condition – 1. LC Mode: TN 2. Light Source : CMO LED BLU 3. Film : Linear Polarizer+WV (Nitto NPF-TEG1424DU) 4. Machine : DMS 803
Contrast Ratio		CR			500	-	-	
Response Time		T_{on}		-	5		ms	
		T_{off}		-	15		ms	
Viewing Angle	Hor.	θ_{X+}	Center CR≥10	-	70	-	deg.	
		θ_{X-}		-	70	-		
	Ver.	θ_{Y+}		-	60	-		
		θ_{Y-}		-	60	-		
Chromaticity	Red	X_R	Viewing normal angle $\theta_X = \theta_Y = 0°$	0.611	0.641	0.671	-	Under C light Simulation CG : NTSC 60%
		Y_R		0.290	0.320	0.350	-	
	Green	X_G		0.270	0.300	0.330	-	
		Y_G		0.536	0.566	0.596	-	
	Blue	X_B		0.104	0.134	0.164	-	
		Y_B		0.098	0.128	0.158	-	
	White	X_W		0.267	0.297	0.327	-	
		Y_W		0.301	0.331	0.361	-	

*Note (1) Definition of Contrast Ratio (CR):

The contrast ratio can be calculated by the following expression.

Contrast Ratio (CR) = L63 / L0

L63: Luminance of gray level 63

L 0: Luminance of gray level 0

CR = CR (5)

CR (X) is corresponding to the Contrast Ratio of the point X at Figure in Note (5).

*Note (2) Definition of Response Time (T_{on}, T_{off}):

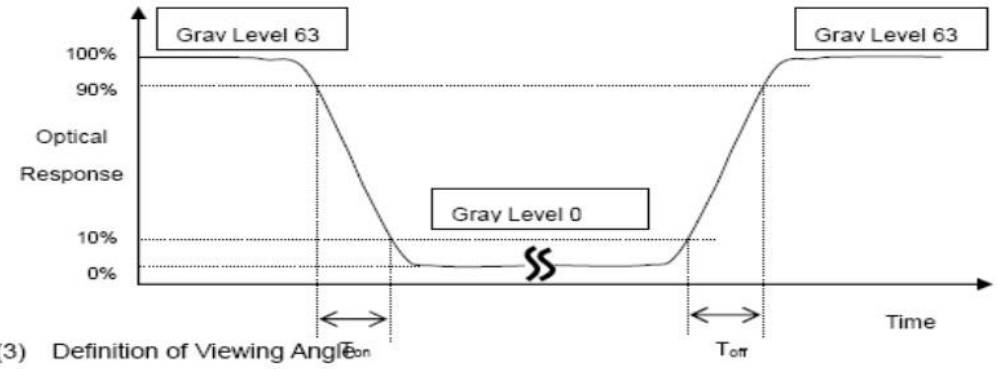

*Note(3) Definition of Viewing Angle

Table 6-3 - 3.5" TFT Optical specification

Copyright © 2015 Future Technology Devices International Limited

7 Contact Information

Head Office – Glasgow, UK

Unit 1, 2 Seaward Place, Centurion Business Park
Glasgow G41 1HH
United Kingdom
Tel: +44 (0) 141 429 2777
Fax: +44 (0) 141 429 2758

E-mail (Sales) sales1@ftdichip.com
E-mail (Support) support1@ftdichip.com
E-mail (General Enquiries) admin1@ftdichip.com

Branch Office – Tigard, Oregon, USA

7130 SW Fir Loop
Tigard, OR 97223
USA
Tel: +1 (503) 547 0988
Fax: +1 (503) 547 0987

E-Mail (Sales) us.sales@ftdichip.com
E-Mail (Support) us.support@ftdichip.com
E-Mail (General Enquiries) us.admin@ftdichip.com

Branch Office – Taipei, Taiwan

2F, No. 516, Sec. 1, NeiHu Road
Taipei 114
Taiwan , R.O.C.
Tel: +886 (0) 2 8797 1330
Fax: +886 (0) 2 8751 9737

E-mail (Sales) tw.sales1@ftdichip.com
E-mail (Support) tw.support1@ftdichip.com
E-mail (General Enquiries) tw.admin1@ftdichip.com

Branch Office – Shanghai, China

Room 1103, No. 666 West Huaihai Road,
Shanghai, 200052
China
Tel: +86 (0)21 6235 1596
Fax: +86 (0)21 6235 1595

E-mail (Sales) cn.sales@ftdichip.com
E-mail (Support) cn.support@ftdichip.com
E-mail (General Enquiries) cn.admin@ftdichip.com

Web Site

http://ftdichip.com

Distributor and Sales Representatives

Please visit the Sales Network page of the FTDI Web site for the contact details of our distributor(s) and sales representative(s) in your country.

System and equipment manufacturers and designers are responsible to ensure that their systems, and any Future Technology Devices International Ltd (FTDI) devices incorporated in their systems, meet all applicable safety, regulatory and system-level performance requirements. All application-related information in this document (including application descriptions, suggested FTDI devices and other materials) is provided for reference only. While FTDI has taken care to assure it is accurate, this information is subject to customer confirmation, and FTDI disclaims all liability for system designs and for any applications assistance provided by FTDI. Use of FTDI devices in life support and/or safety applications is entirely at the user's risk, and the user agrees to defend, indemnify and hold harmless FTDI from any and all damages, claims, suits or expense resulting from such use. This document is subject to change without notice. No freedom to use patents or other intellectual property rights is implied by the publication of this document. Neither the whole nor any part of the information contained in, or the product described in this document, may be adapted or reproduced in any material or electronic form without the prior written consent of the copyright holder. Future Technology Devices International Ltd, Unit 1, 2 Seaward Place, Centurion Business Park, Glasgow G41 1HH, United Kingdom. Scotland Registered Company Number: SC136640

Copyright © 2015 Future Technology Devices International Limited

Appendix A - References

For module documentations, please refer to URL below:

FT81x datasheet: DS_FT81x

FT81x software programming guide: FT81x_Programmer_Guide

Copyright © 2015 Future Technology Devices International Limited

Appendix B - List of Figures and Tables

List of Figures

Figure 3-1 – ME810A-HV35R board bottom view 4
Figure 4-1 – ME810A-HV35R connects to MM900EV Module 6
Figure 5-1 – J1 Pin Header Dimensions 8
Figure 5-2 – Bezel dimensions 9
Figure 6-1 – Board Schematic 10

List of Tables

Table 2-1 – Ordering information 2
Table 3-1 – J1 Pinout 5
Table 4-1 – ME810A-HV35R J1 and MM900EV module J2 connection 7
Table 7-1 - Operating Voltage and Current 11
Table 7-2 - LCD and Touch Information 11
Table 7-3 - 3.5” TFT Optical specification 12

Copyright © 2015 Future Technology Devices International Limited

Appendix C – Revision History

Document Title: ME810A-HV35R module
Document Reference No.: FT_001232
Clearance No.: FTDI# 468
Product Page: http://www.ftdichip.com/eve.htm
Document Feedback: Send Feedback

Revision	Changes	Date
1.0	Initial Release	2015-09-29

Copyright © 2015 Future Technology Devices International Limited