

Image may differ from product. See technical specification for details.

6009 NR

Deep groove ball bearing with snap ring

Single row deep groove ball bearings with a snap ring groove are particularly versatile, have low friction and are optimized for low noise and low vibration, which enables high rotational speeds. They accommodate radial and axial loads in both directions, are easy to mount, and require less maintenance than many other bearing types. The snap ring, fitted in an annular groove in the outer ring, facilitates axial location of the bearings within their housings. Also available on request with special sized bore and/or outside diameters, suitable for reworked shafts and housings.

- Snap ring facilitates axial location within housing
- Simple, versatile and robust design
- Low friction and high-speed capability
- Accommodate radial and axial loads in both directions
- Require little maintenance

Overview

Dimensions

Bore diameter	45 mm
Outside diameter	75 mm
Width	16 mm

Performance

Basic dynamic load rating	22.1 kN
Basic static load rating	14.6 kN
Reference speed	20 000 r/min
Limiting speed	12 000 r/min
SKF performance class	SKF Explorer

Properties

Filling slots	Without
Number of rows	1
Locating feature, bearing outer ring	Snap ring (fitted)
Bore type	Cylindrical
Cage	Sheet metal
Matched arrangement	No
Radial internal clearance	CN
Material, bearing	Bearing steel
Coating	Without
Sealing	Without
Lubricant	None
Relubrication feature	Without
Indicative carbon footprint for new product	0.9 kg CO_2e

Logistics

Product net weight	0.243 kg
eClass code	23-05-08-01
UNSPSC code	31171504

Technical specification

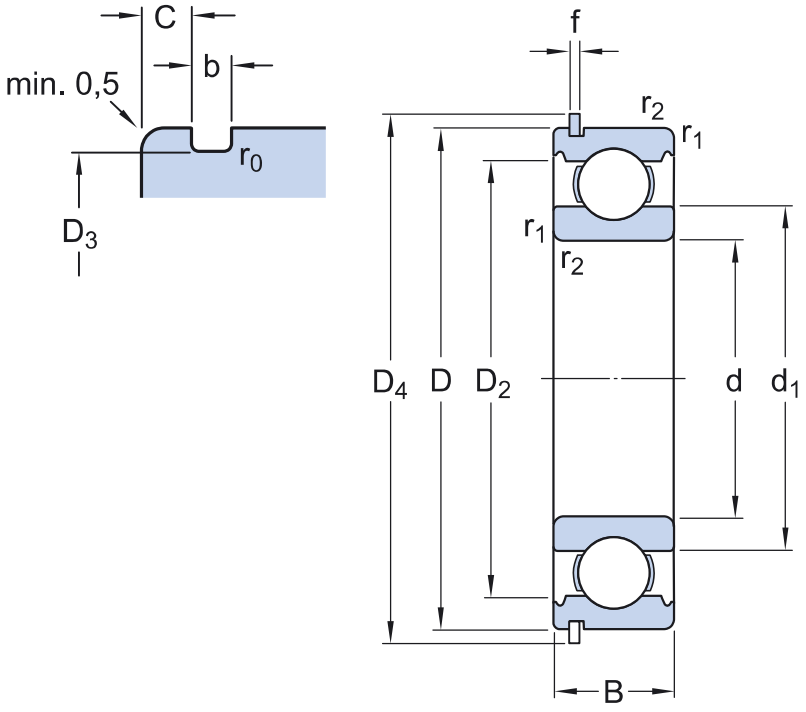

Dimensions

d	45 mm	Bore diameter
$t_{\Delta dmp}$	-0.01 – 0 mm	Deviation limits of mid-range bore diameter
D	75 mm	Outside diameter
$t_{\Delta Dmp}$	-0.011 – 0 mm	Deviation limits of mid-range outside diameter
B	16 mm	Width
$t_{\Delta Bs}$	-0.06 – 0 mm	Deviation limits of ring width
d_1	≈ 54.75 mm	Shoulder diameter
D_2	≈ 67.8 mm	Recess diameter
D_3	71.83 mm	Diameter of snap ring groove
D_4	81.6 mm	Outside diameter of snap ring
b	1.9 mm	Width of snap ring groove
C	2.49 mm	Distance from outer ring side face to snap ring groove
f	1.7 mm	Width of snap ring
r_0	max. 0.6 mm	Bottom radius of snap ring groove
$r_{1,2}$	min. 1 mm	Chamfer dimension
	P6 and tighter width tolerance	ISO tolerance class for dimensions

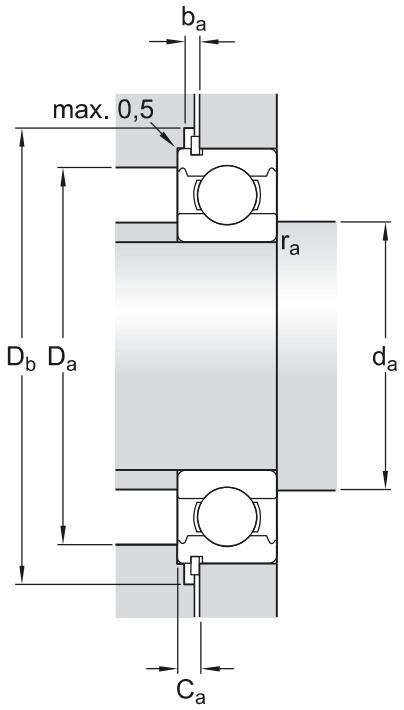

Abutment dimensions

d_a	min. 50.8 mm	Diameter of shaft abutment
D_a	max. 69.2 mm	Diameter of housing abutment
D_b	min. 83 mm	Diameter of snap ring recess in the housing
b_a	min. 2.2 mm	Width of snap ring recess in the housing
C_a	max. 4.19 mm	Distance from outer ring side face to snap ring back face
r_a	max. 1 mm	Radius of shaft or housing fillet

Calculation data

SKF performance class		SKF Explorer
Basic dynamic load rating	C	22.1 kN
Basic static load rating	C_0	14.6 kN
Fatigue load limit	P_u	0.64 kN
Reference speed		20 000 r/min
Limiting speed		12 000 r/min
Minimum load factor	k_r	0.025
Calculation factor	f_0	14.9

Tolerances of run-out

Range of section height at inner ring of assembled bearing	t_{Kia}	10 µm
Range of section height at outer ring of assembled bearing	t_{Kea}	13 µm
ISO tolerance class for geometrical tolerances		P6

Included products

Snap ring	SP 75

Tolerances and clearances

GENERAL BEARING SPECIFICATIONS

- Tolerances: Normal (metric), P6, P5, Normal (inch)
- Radial internal clearance: Classes C2 to C5

BEARING INTERFACES

- Seat tolerances for standard conditions
- Tolerances and resultant fits

Compatible products

Mounting tool

Bearing fitting tool kit	TMFT 36
Bearing fitting tool kit, PRO version	TMFT 36/PRO

Terms of use

By accessing and using this website / app owned and published by AB SKF (publ.) (556007-3495 · Gothenburg) (“SKF”), you agree to the following terms and conditions:

Warranty Disclaimer and Limitation of Liability

Although every care has been taken to assure the accuracy of the information on this website / app, SKF provides this information "AS IS" and DISCLAIMS ALL WARRANTIES, EXPRESS OR IMPLIED, INCLUDING, BUT NOT LIMITED TO, IMPLIED WARRANTIES OF MERCHANTABILITY AND FITNESS FOR A PARTICULAR PURPOSE. You acknowledge that your use of this website / app is at your sole risk, that you assume full responsibility for all costs associated with use of this website / app, and that SKF shall not be liable for any direct, incidental, consequential, or indirect damages of any kind arising out of your access to, or use of the information or software made available on this website / app.

Any warranties and representations in this website / app for SKF products or services that you purchase or use will be subject to the agreed upon terms and conditions in the contract for such product or service.

Further, for non-SKF websites / apps that are referenced in our website / app or where a hyperlink appears, SKF makes no warranties concerning the accuracy or reliability of the information in these websites / apps and assumes no responsibility for material created or published by third parties contained therein. In addition, SKF does not warrant that this website / app or these other linked websites / apps are free from viruses or other harmful elements.

Third Party Services

When viewing YouTube content via the SKF website(s) (i.e. using YouTube API Services), you agree to be bound by the YouTube Terms of Service.

Copyright

Copyright in this website / app copyright of the information and software made available on this website / app rest with SKF or its licensors. All rights are reserved. All licensed material will reference the licensor that has granted SKF the right to use the material. The information and software made available on this website / app may not be reproduced, duplicated, copied, transferred, distributed, stored, modified, downloaded or otherwise exploited for any commercial use without the prior written approval of SKF. However, it may be reproduced, stored and downloaded for use by individuals without prior written approval of SKF. Under no circumstances may this information or software be supplied to third parties.

This website /app includes certain images used under license from Shutterstock, Inc.

Trademarks and Patents

All trademarks, brand names, and corporate logos displayed on the website / app are the property of SKF or its licensors, and may not be used in any way without prior written approval by SKF. All licensed trademarks published on this website / app reference the licensor that has granted SKF the right to use the trademark. Access to this website / app does not grant to the user any license under any patents owned by or licensed to SKF.

Changes

SKF reserves the right to make changes or additions to this website / app at any time.