Sauls Wharf House
Crittens Road
Great Yarmouth
Norfolk
NR31 0AG

Telephone +44 (0)1493 602602
Email:sales@midasdisplays.com
Email:tech@midasdisplays.com
www.midasdisplays.com

MC21605B6W-FPTLA-V2	2 x 16	5mm Character Height	LCD Module
Specification			
Version: 1		Date: 29/09/2016	
Revision			

Display Features			
Character Count	2 x 16		
Appearance	Black on Amber		
Logic Voltage	5V		
Interface	Parallel		
Font Set	English / Japanese		
Display Mode	Transflective		
Character Height	5.23mm		
LC Type	FSTN		
Module Size	85.00 x 36.00 x 13.5 mm		
Operating Temperature	-20°C ~ +70°C		
Construction	COB	Box Quantity	Weight / Display
LED Backlight	Amber	45 pcs	28.88 grams

* - For full design functionality, please use this specification in conjunction with the ST7066U specification. (Provided Separately)

Display Accessories	
Part Number	**Description**
MCCMDB-16DIL	LCD Interconnect board, can be driven from either a PC or a single Board computer with a USB output.
MCCBL1A16DLIP -16DILS-150	16 Way, Dual in-line to Dual In-line connector Cable.

Optional Variants		
Fonts	**Appearances**	**Voltage**
English / European English / Russian	Black on Yellow/Green Black on White Black on Red White on Blue	3V

MIDAS DISPLAYS
DESIGN • MANUFACTURE • SUPPLY

Mechanical Specifications					
Module Size	85.00 x 36.00 x 13.5 (With Backlight)				W x H x D mm
Viewing Area	64.00 x 16.40	W x H mm	Hole-to-Hole	80.00 x 31.00	W x H mm
Character Size	3.00 x 5.23	W x H mm	Character Pitch	0.51 x 0.52	W x H mm
Dot Size	0.56 x 0.61	W x H mm	Dot Pitch	0.05 x 0.05	W x H mm

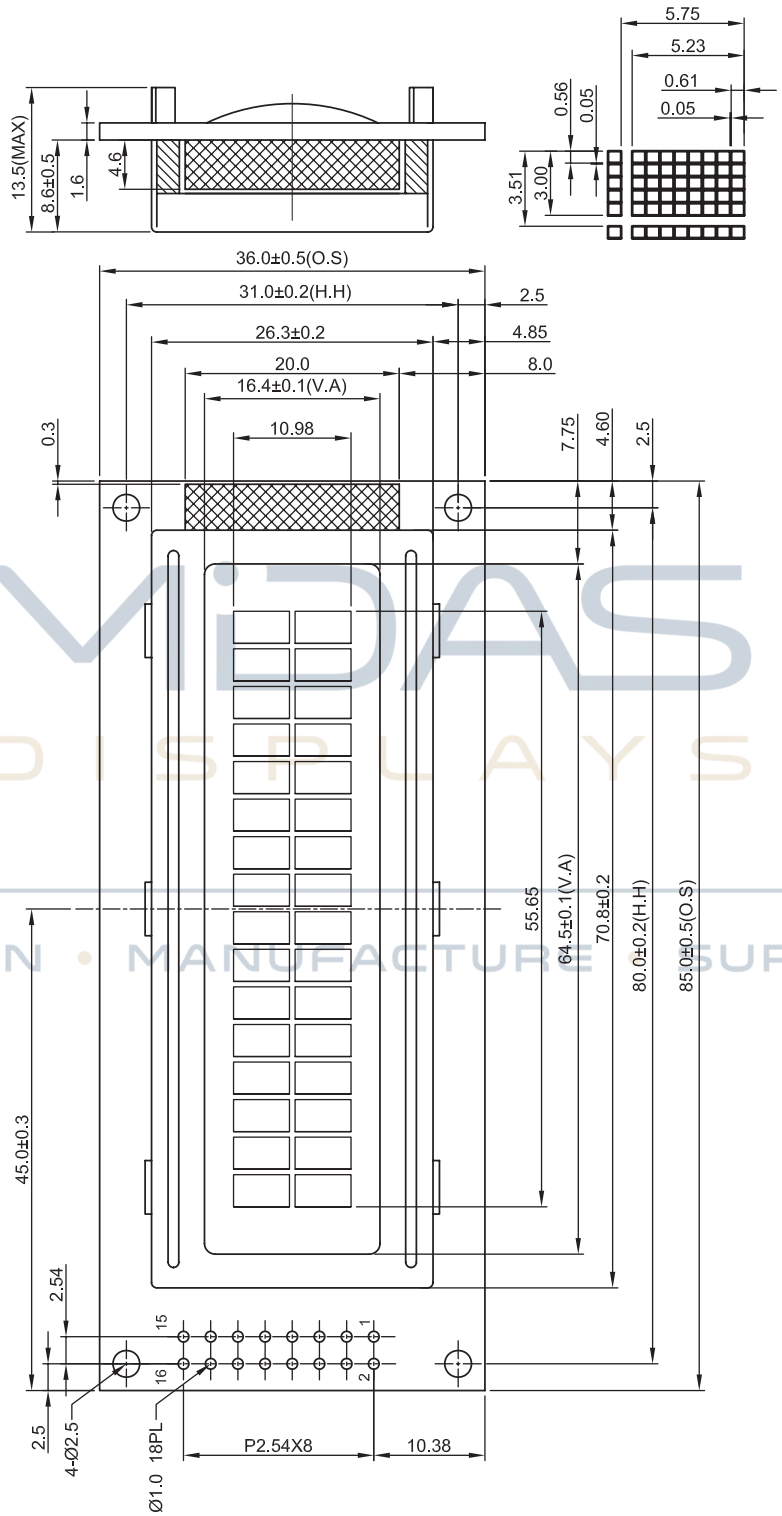

MIDAS DISPLAYS
DESIGN • MANUFACTURE • SUPPLY

MC21605B6W-FPTLA-V2	2 x 16	5mm Character Height	LCD Module
Specification			
Version: 1		Date: 29/09/2016	
Revision			

Pin Layout

PI	SYMBOL	DESCRIPTION	REMARKS
1	Vss	GND	
2	Vdd	Power supply for LCM	5.0V
3	V0	Contrast Adjust	
4	RS	Register Select Signal	
5	R/W	Data Read / Write	
6	E	Enable Signal	
7	DB0	Data bus line	
8	DB1	Data bus line	
9	DB2	Data bus line	
10	DB3	Data bus line	
11	DB4	Data bus line	
12	DB5	Data bus line	
13	DB6	Data bus line	
14	DB7	Data bus line	
15	LED+	Power supply for BKL	5.0V
16	LED-	Power supply for BKL	

MIDAS DISPLAYS
DESIGN • MANUFACTURE • SUPPLY

Block Diagram

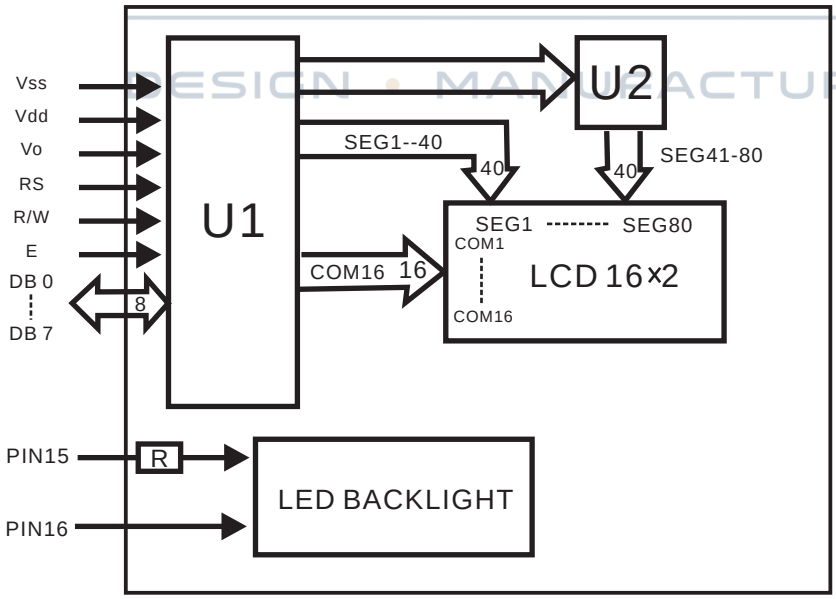

Power Supply Diagram

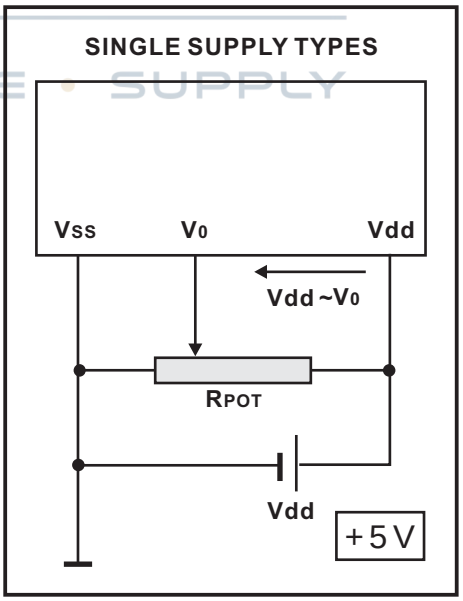

MC21605B6W-FPTLA-V2	2 x 16	5mm Character Height	LCD Module
Specification			
Version: 1		Date: 29/09/2016	
Revision			

Font Map

Upper 4bit / Lower 4bit	LLLL	LLLH	LLHL	LLHH	LHLL	LHLH	LHHL	LHHH	HLLL	HLLH	HLHL	HLHH	HHLL	HHLH	HHHL	HHHH
LLLL	CG RAM (1)															
LLLH	(2)															
LLHL	(3)															
LLHH	(4)															
LHLL	(5)															
LHLH	(6)															
LHHL	(7)															
LHHH	(8)															
HLLL	(1)															
HLLH	(2)															
HLHL	(3)															
HLHH	(4)															
HHLL	(5)															
HHLH	(6)															
HHHL	(7)															
HHHH	(8)															

MIDAS DISPLAYS
DESIGN MANUFACTURER SUPPLY

Absolute Maximum Ratings

Item	Symbol	Condition	Min	Typ	Max	Unit
Power Supply (LOGIC)	Vdd	25°C	-0.3	---	7.0	V
Power Supply (LCD)	V0	25°C	Vdd -13.5	---	Vdd +0.3	V
Input Voltage	Vin	25°C	-0.3	---	Vdd +0.3	V
Operating Temperature	Vopr	---	-20	---	70	C
Storage Temperature	Vstg	---	-30	---	80	C

Electronic Characteristics

Item	Symbol	Condition	Min	Typ	Max	Unit
Input Voltage	Vlcm = Vdd	---	---	5.0	---	V
Supply Current	Idd	Vdd=5V	---	1.5	---	mA
Driving Voltage for LCD Panel	Vlcd = (Vdd - V0)	-20 °C	4.45	---	4.90	V
		0°C	4.35	---	4.70	
		25 °C	4.25	4.50	4.80	
		50 °C	4.15	---	4.70	
		70 °C	4.05	---	4.60	

LCD Characteristics

For STN/FSTN LCD Panel Types

Item	Symbol	Condition	Min	Typ	Max	Unit
Viewing Angle	Φ2 – Φ1	K = 4	40°	---	---	Deg
	Θ		60°			
Contrast Ratio	K	---	---	10	---	---
Response Time (Rise)	TR	---	---	150	250	ms
Response Time (Fall)	TF	---	---	150	250	ms

LED Characteristics

Item	Symbol	Condition	Min	Typ	Max	Unit
LED Forward Voltage	Vf	25°C	2.8	3.0	---	V
LED Forward Current*	If	25°C	---	17	---	mA
LED Reverse Current	Ir	25°C Vr=5.0V	---	---	10	A
LED Peak Wave Length	λp	25°C If=17mA	584	---	594	nm
LED Brightness (Without LCD)	Lv	25°C If=17mA	---	45	---	cd/m^2
LED Brightness Uniformity	Lvmin/Lvmax	25°C If=17mA	70	---	---	Ratio
LED Life Time		25°C If=17mA	9K	---	---	Hours

Attention: It is constant current, not constant voltage, which should be applied when driving the LED backlight, please ensure you adhere to this rule.

MIDAS DISPLAYS
DESIGN • MANUFACTURE • SUPPLY