Your Expert Partner for **Human Machine Interfaces**

Actuator

Distribution by
Rs-online

92-
158.500



https://rs-online.eao.com/component/92-158.50...

Your product:



92-158.500
Actuator

FRONT

Front dimension:	18,4 mm x 18,4 mm
Front form:	Square
Front bezel colour:	Black
Front bezel material:	Plastic

MOUNTING

Design:	PCB
Mounting type:	Panel mounting

OPERATING-/INDICATION PART

Lens colour:	Green
Lens material:	Plastic
Lens illumination:	Illuminated
Lens shape:	Flush
Lens optics:	transparent

MECHANICAL CHARACTERISTICS

Tightening torque:	Fixing nut max. 0.5 Nm, Fixing screw mounting flange 0.4 Nm
Weight:	0.004 kg

AMBIENT CONDITION

IP front protection:	IP40

IP Protection:	IP40 front side
Operating temperature:	– 25 °C ... + 70 °C
Storage temperature:	– 40 °C ... + 80 °C

CERTIFICATE

Approbations:	CQC
Conformities:	CE, UKCA, 2011 / 65 / EC (RoHS), 2014 / 35 / EU (LVD)
REACH:	REACH compliant
RoHS:	RoHS compliant

OTHER

Short Description:	Actuator, 18,4 mm x 18,4 mm, Flush, Illuminated, Green, Plastic, transparent, Square, Black, Plastic, IP40
Dimension:	18.4 mm x 18.4 mm
Housing colour:	Black
Housing material:	Plastic

Wiring diagrams:

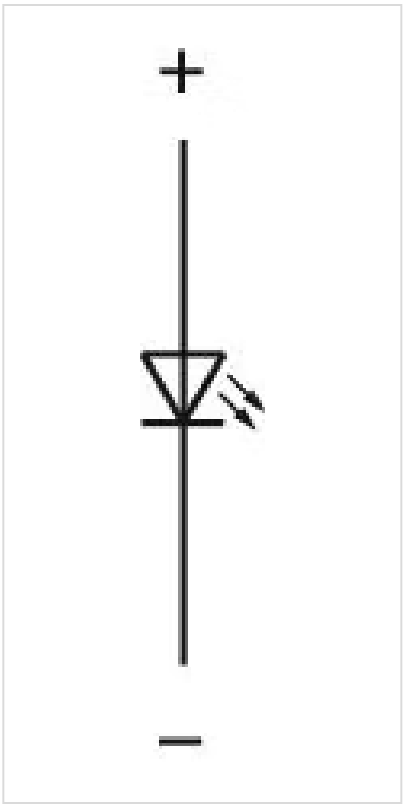

Mounting cut-outs:

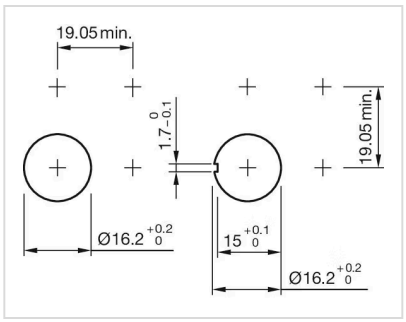

Dimension drawings:

