Product datasheet

Specifications

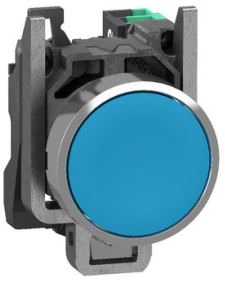

Push button, Harmony XB4, metal, flush, blue, 22mm, spring return, unmarked, 1 NO, compact push in terminals

XB4BA615

EAN Code: 3606486341513

Main

Range of product	Harmony XB4
Device short name	XB4
Product or component type	Push-button
Bezel material	Chromium plated metal
Fixing collar material	Zamak
Mounting diameter	22.5 mm
Sale per indivisible quantity	1
Shape of signaling unit head	Round
Type of operator	spring return
Operator profile	Blue flush, unmarked
Head type	Standard
Contacts type and composition	1 NO
Contact operation	Slow-break
Connections - terminals	Push-in, <= 2 x 1.5 mm² with wire end ferrule conforming to IEC 60947-1 Push-in, >= 1 x 0.34 mm² without wire end ferrule conforming to IEC 60947-1

Complementary

Height	47 mm
Width	30 mm
Depth	43.2 mm
Terminals description ISO n°1	(13-14)NO
Net weight	0.076 kg
Resistance to high pressure washer	7000000 Pa at 55 °C, distance : 0.1 m
Contacts usage	Standard contacts
Positive opening	Without
Operating travel	2.05 mm (NO changing electrical state) 4.3 mm (total travel)
Operating force	2.45 N NO changing electrical state
Mechanical durability	10000000 cycles
Contacts material	Silver alloy (Ag/Ni)
Short-circuit protection	10 A cartridge fuse type gG conforming to IEC 60947-5-1

Disclaimer: This documentation is not intended as a substitute for and is not to be used for determining suitability or reliability of these products for specific user applications

[Ith] conventional free air thermal current	10 A conforming to IEC 60947-5-1
[Ui] rated insulation voltage	300 V (pollution degree 3) conforming to IEC 60947-1
[Uimp] rated impulse withstand voltage	4 kV conforming to IEC 60947-1
[Ie] rated operational current	6 A at 120 V, AC-15, A300 conforming to IEC 60947-5-1 3 A at 240 V, AC-15, A300 conforming to IEC 60947-5-1 0.55 A at 125 V, DC-13, Q300 conforming to IEC 60947-5-1 0.27 A at 250 V, DC-13, Q300 conforming to IEC 60947-5-1
Device presentation	Complete product

Environment

Protective treatment	TH
Ambient air temperature for storage	-40…70 °C
Ambient air temperature for operation	-40…70 °C
Overvoltage category	Class I conforming to IEC 60536
IP degree of protection	IP66 conforming to IEC 60529 IP67 IP69 IP69K
NEMA degree of protection	NEMA 13 NEMA 4X
IK degree of protection	IK06 conforming to IEC 50102
Standards	IEC 60947-1 IEC 60947-5-1 IEC 60947-5-4 IEC 60947-5-5 UL 60947-1 UL 60947-5-1 UL 60947-5-5 UL 1059 UL 486E CSA C22.2 No 60947-1 CSA C22.2 No 60947-5-1 CSA C22.2 No 158 CSA C22.2 No 65 IACS E10
Product certifications	EAC IECEE CB Scheme CCC UL CSA
Vibration resistance	5 gn (f= 10…500 Hz) conforming to IEC 60068-2-6 25 mm peak to peak (f= 2…10 Hz) conforming to IEC 60068-2-6
Shock resistance	25 gn (duration = 6 ms) for 1000 shocks on each axis conforming to IEC 60068-2-27 30 gn (duration = 18 ms) for half sine wave acceleration conforming to IEC 60068-2-27 50 gn (duration = 11 ms) for half sine wave acceleration conforming to IEC 60068-2-27

Packing Units

Unit Type of Package 1	PCE
Number of Units in Package 1	1
Package 1 Height	3.048 cm
Package 1 Width	5.334 cm
Package 1 Length	8.382 cm
Package 1 Weight	77.111 g

Contractual warranty

Warranty (in months)	18

Environmental Data

Schneider Electric aims to achieve Net Zero status by 2050 through supply chain partnerships, lower impact materials, and circularity via our ongoing “Use Better, Use Longer, Use Again” campaign to extend product lifetimes and recyclability.

Environmental Data explained >

How we assess product sustainability >

Environmental footprint

Total lifecycle Carbon footprint	1
Environmental Disclosure	Product Environmental Profile

Use Better

Materials and Substances

Packaging made with recycled cardboard	No
Packaging without single use plastic	No
EU RoHS Directive	Compliant
REACh Regulation	REACh Declaration

Use Longer

Lifetime extension

Repair	No

Use Again

Repack and remanufacture

End of life manual availability	End of Life Information
Take-back	No
WEEE Label	The product must be disposed on European Union markets following specific waste collection and never end up in rubbish bins

Dimensions Drawings

Dimensions

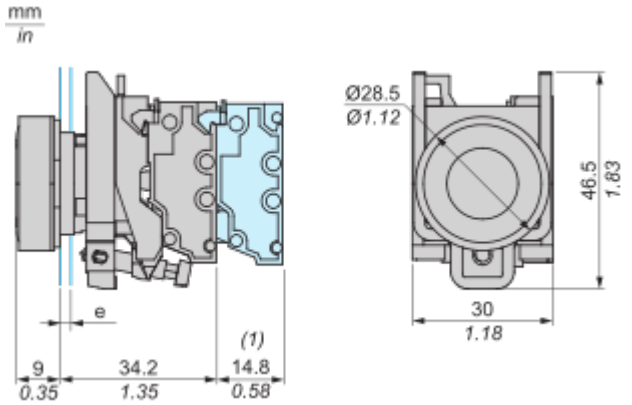

e : Clamping thickness: 1 to 6 mm / 0.04 to 0.24 in.
(1) : Additional row of contacts or double contact

Mounting and Clearance

Mounting

Mounting and Unmounting

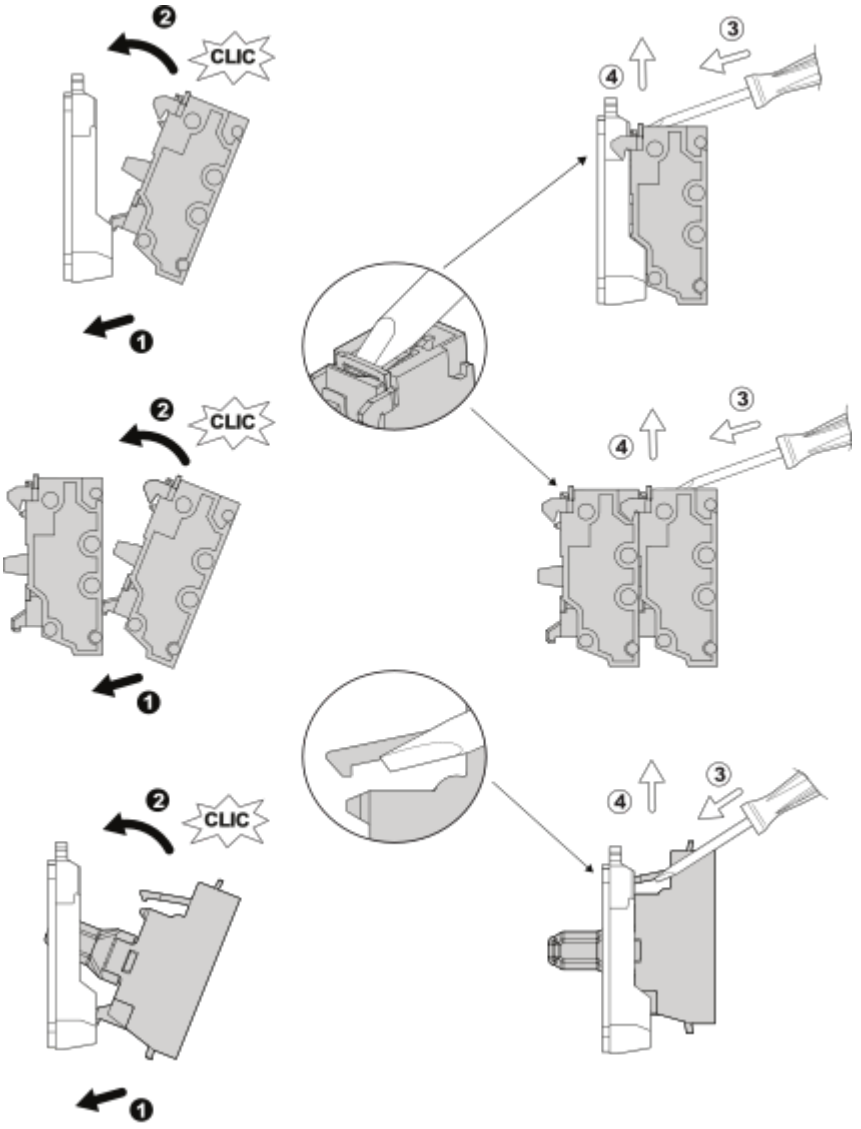

Panel cut-out Dimension

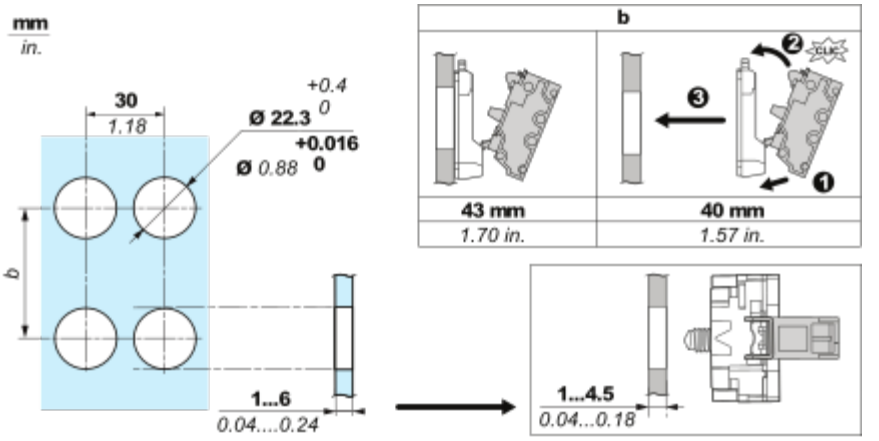
mm
in.
30
1.18
Ø 22.3 +0.4 0
Ø 0.88 +0.016 0
b
1...6
0.04....0.24
b
43 mm
1.70 in.
40 mm
1.57 in.
1...4.5
0.04...0.18

Connections and Schema

Wiring

Wiring and Unwiring

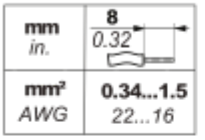

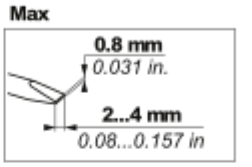

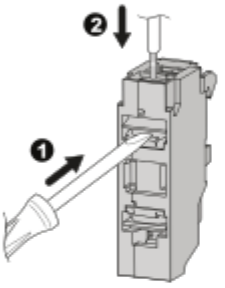

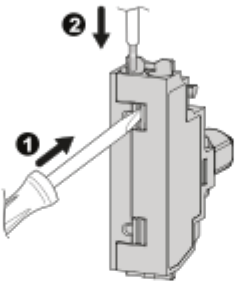

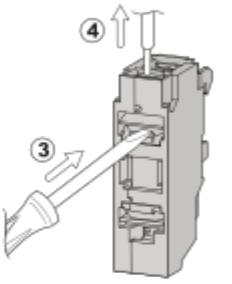

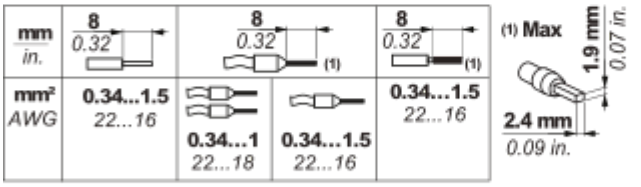

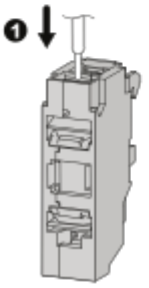

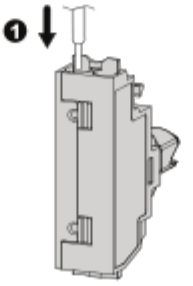

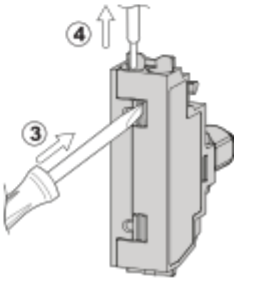

Technical Illustration

Dimensions

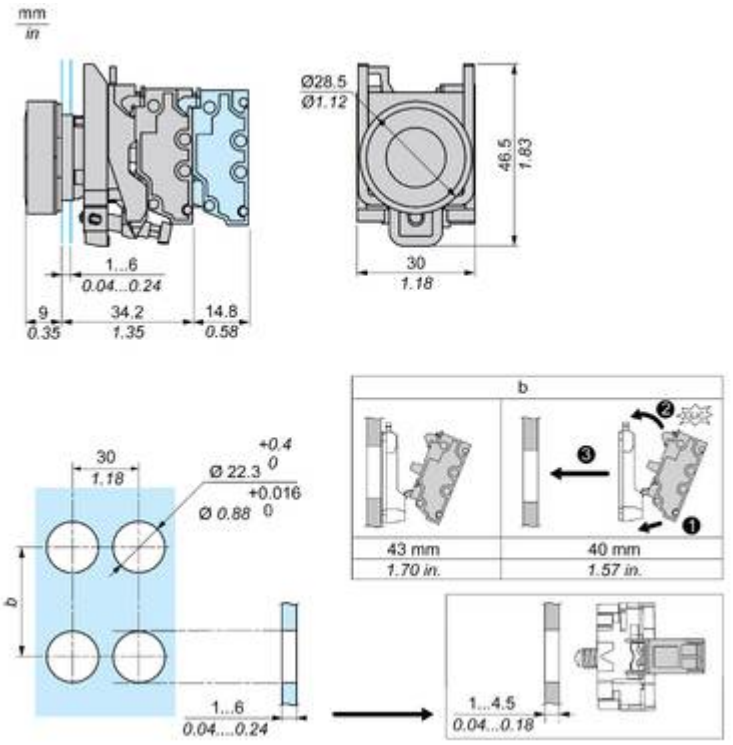

Technical Illustration

Wiring diagram

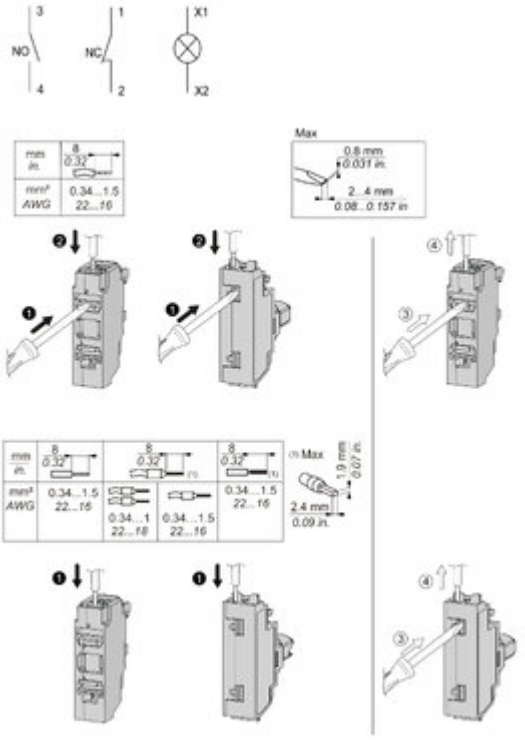

Image of product / Alternate images

Alternative

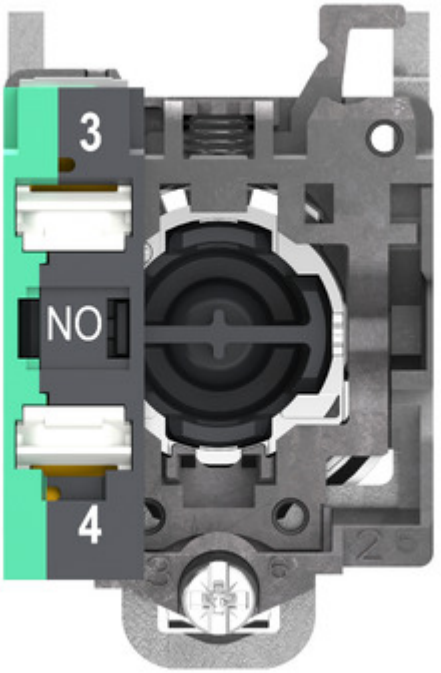

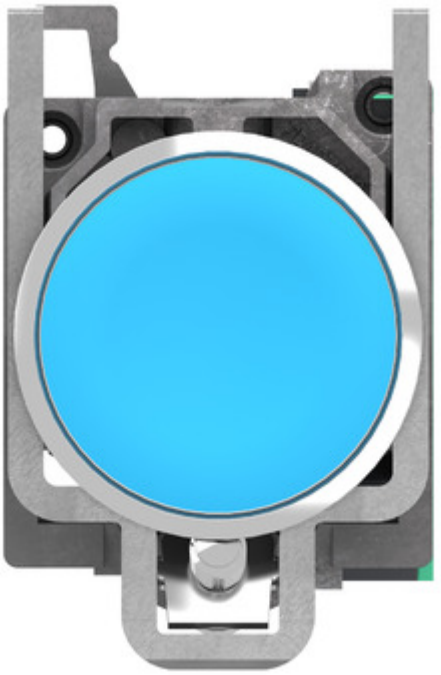

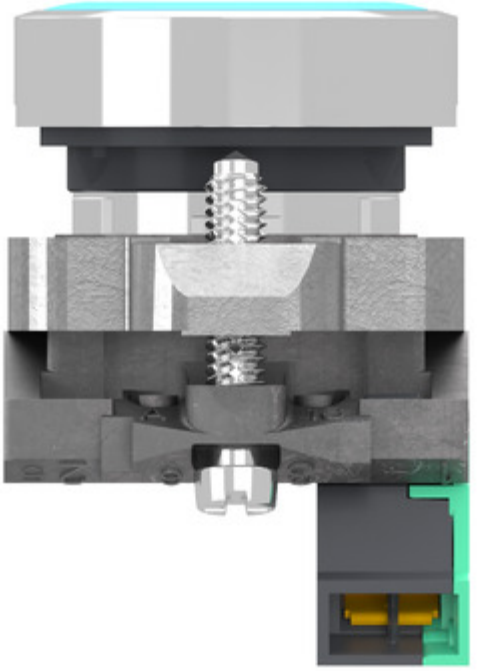

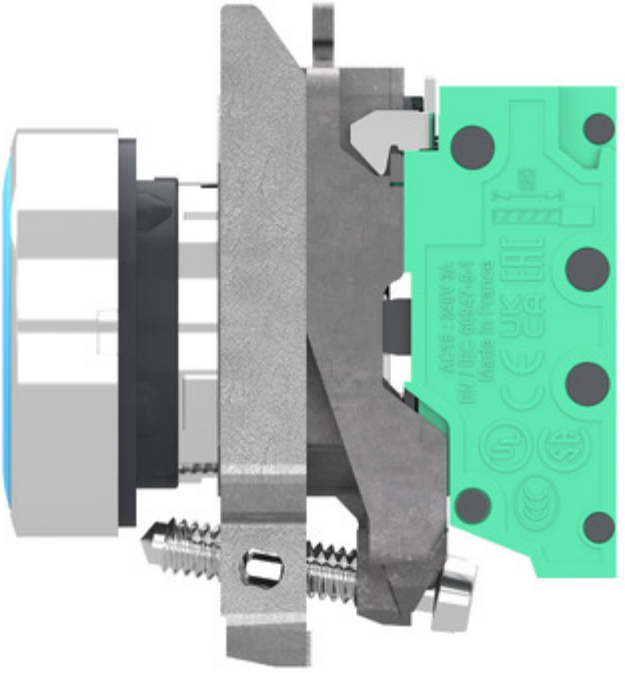
AC-15 : 240V 3A
DC-13 : 250V 0.27A
Made in France

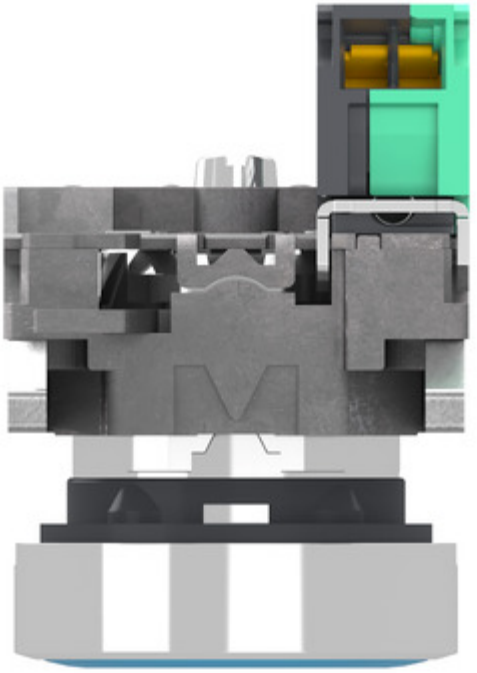

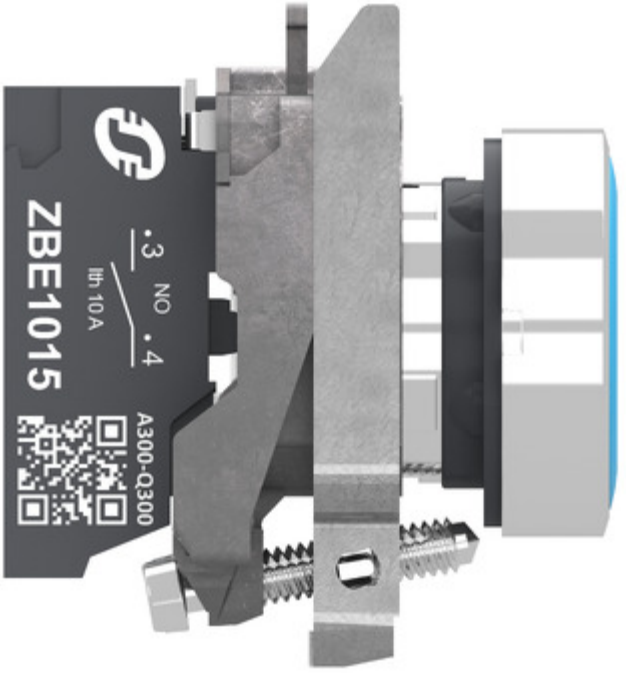
ZBE1015
A300-Q300
3
NO
4
Ith 10 A