Fieldbus System
(For Input/Output)

New

RoHS

Applicable Fieldbus protocols

CC-Link V2 | DeviceNet | PROFIBUS | EtherNet/IP | EtherCAT

New unit type added
SI Unit (EtherC AT)

Reduction in wiring time with SPEEDCON (Phoenix Contact). Just insert and make 1/2 rotation!

IP67
Note) Some products are IP40.

Self diagnosis function

It is possible to asce rtain the maintenance period and identify the parts that require maintenance, by an input/output open circuit detecting function and an input/output signal ON/OFF counter function. Also, the monitoring of input and output signals and the setting of parameters can be performed with a Handheld Terminal.

Max. 9 units Note) Can be connected in any order.

The unit to connect input device such as an auto switch, pressure switch and flow switch, and the unit to connect output device such as a solenoid valve, relay and indicator light can be connected in any order.

Note) Except SI Unit

Manifold Solenoid Valves

Series SY3000/5000

IP67

Series SV1000/2000/3000

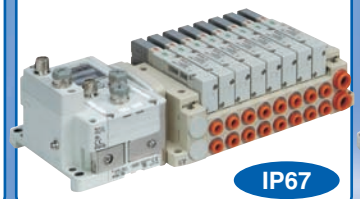

IP67

Series S0700

IP40

Series VQC1000/2000/4000

IP67

Note) The SY3000/5000, S0700, and VQC1000/2000/4000 are not UL-compatible.

Series EX600

SMC

CAT.NA02-24C

Fieldbus System

Analog Unit

M12 connector (5 pins)

Input Unit — 2CH

Output Unit — 2CH

Input/Output Unit — 2CH/2CH

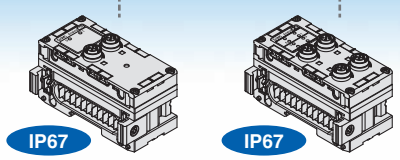

Input device

Pressure sensor

Flow sensor

Output device

Electro-pneumatic regulator, etc.

SI Unit

EtherCAT added to compatible communication networks

Handheld Terminal
Parameter setting and I/O monitor tool

Units can be differentiated by color.

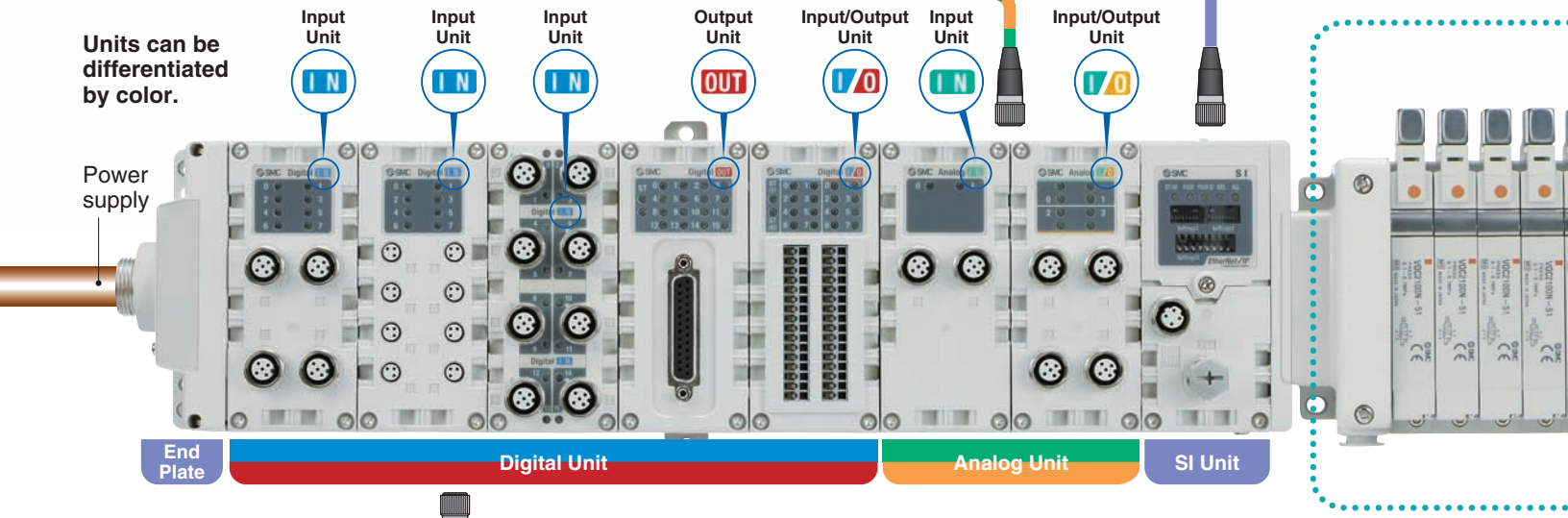

For detailed specifications of connectable device, refer to the catalog of each device and select the right device for your application. If anything is unclear, contact us.

Digital Unit

	M12 connector (5 pins)		M8 connector (3 pins)	D-sub connector	Spring type terminal block
Input Unit	8 inputs	16 inputs	8 inputs	16 inputs	16 inputs
Output Unit	8 outputs			16 outputs	16 outputs
Input/Output Unit				8 inputs/8 outputs	8 inputs/8 outputs
	IP67	IP67	IP67	IP40	IP40

Input device

Pressure switch
Flow switch
Auto switch

Others
Proximate sensor
Photoelectric switch
Limit switch

Output device

Solenoid valve

Others
Indicator light
Relay
Buzzer

SMC

Parameters

A **parameter** is a set value to change the function and operation of the product through a PLC or Handheld Terminal. The desired operation for the customer's application is realized by the set values. There are some parameters that can only be set using the Handheld Terminal of this series.

SI Unit

Unit to connect various Fieldbus with the EX600 system

Digital Unit

Unit to input or output digital (switch) signals

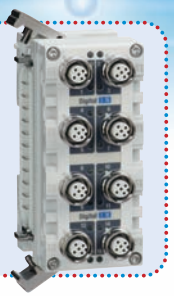

Analog Unit

Unit to input or output analog (voltage/current) signals

End Plate

Unit to supply power to the EX600 system

Handheld Terminal

Parameter setting and I/O monitor tool

Accessories

Options including a power supply cable, etc. for the EX600 series

Manifold solenoid valves

Series SY (IP67)

Series SV (IP67)

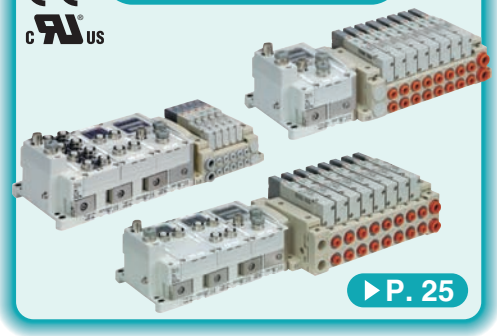

Series S0700 (IP40)

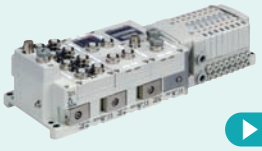

Series VQC (IP67)

Connection using D-sub connector

IP40

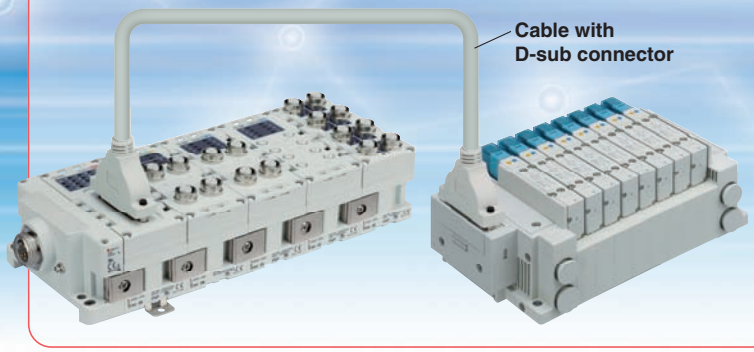

These units are capable of connection using a D-sub connector. There are three types of units, for digital input, output, and input/output. The Digital Output Unit can be connected with an SMC manifold solenoid valve F kit (D-sub connector).

Manifold solenoid valve can be connected using cable with D-sub connector.

- Series **SY**
- Series **S0700**
- Series **SJ**
- Series **SQ**
- Series **SV**
- Series **VQC**
- Series **VQ**

∗ Please limit the number of valve connections to 16 stations for single and 8 stations for double. Refer to the catalog for each product for pin assignment details.

Connection using spring type terminal block

IP40

These terminal block units are compatible with individual wiring configurations. There are three types of units, for digital input, output, and input/output. Wiring connection to a sensor connector box, etc., can be carried out easily using only a flat head screwdriver.

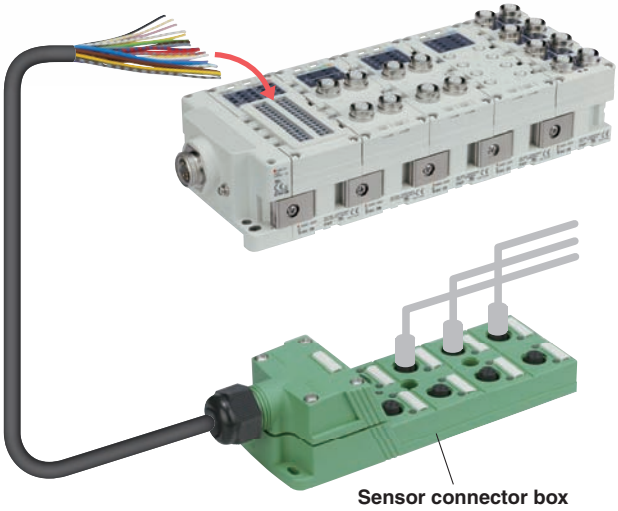

Analog Input/Output Unit

IP67

These units input or output analog (voltage/current) signals. A single unit performs both input and output, allowing feedback control where analog signals are received from a pressure sensor and sent to a pressure controller. Installation space is minimized as well.

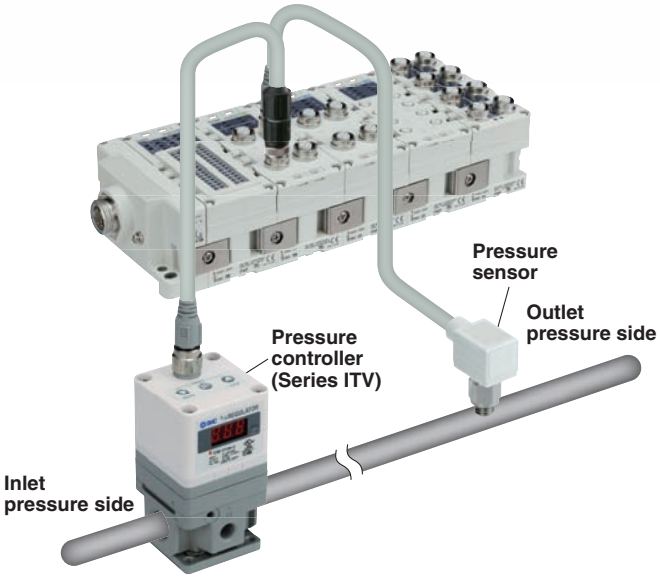

Self Diagnosis Function

In combination with the Handheld Terminal, the following two functions are available.

Short/Open circuit detecting function

It is possible to detect short or open circuit of input device such as an electronic 2-wire switch and 3-wire switch and output device such as a solenoid valve. The location of the error can be identified by the indicator light and the network.

Green ON Normal

Red ON Short circuit

Red flashing Open circuit

Counter function

It is possible to ascertain the maintenance period and identify the parts that require maintenance by an input and output signal ON/OFF counter function. When the counter function is enabled and a certain number of contact operations is reached, the display of counter will flash in red.

Note) The counter function is not provided with the Analog Unit.

Individual units can be connected and removed one by one.

A unique clamping method is adopted to prevent screws from falling out.
It is easy to separate the unit just by loosening bracket screws.

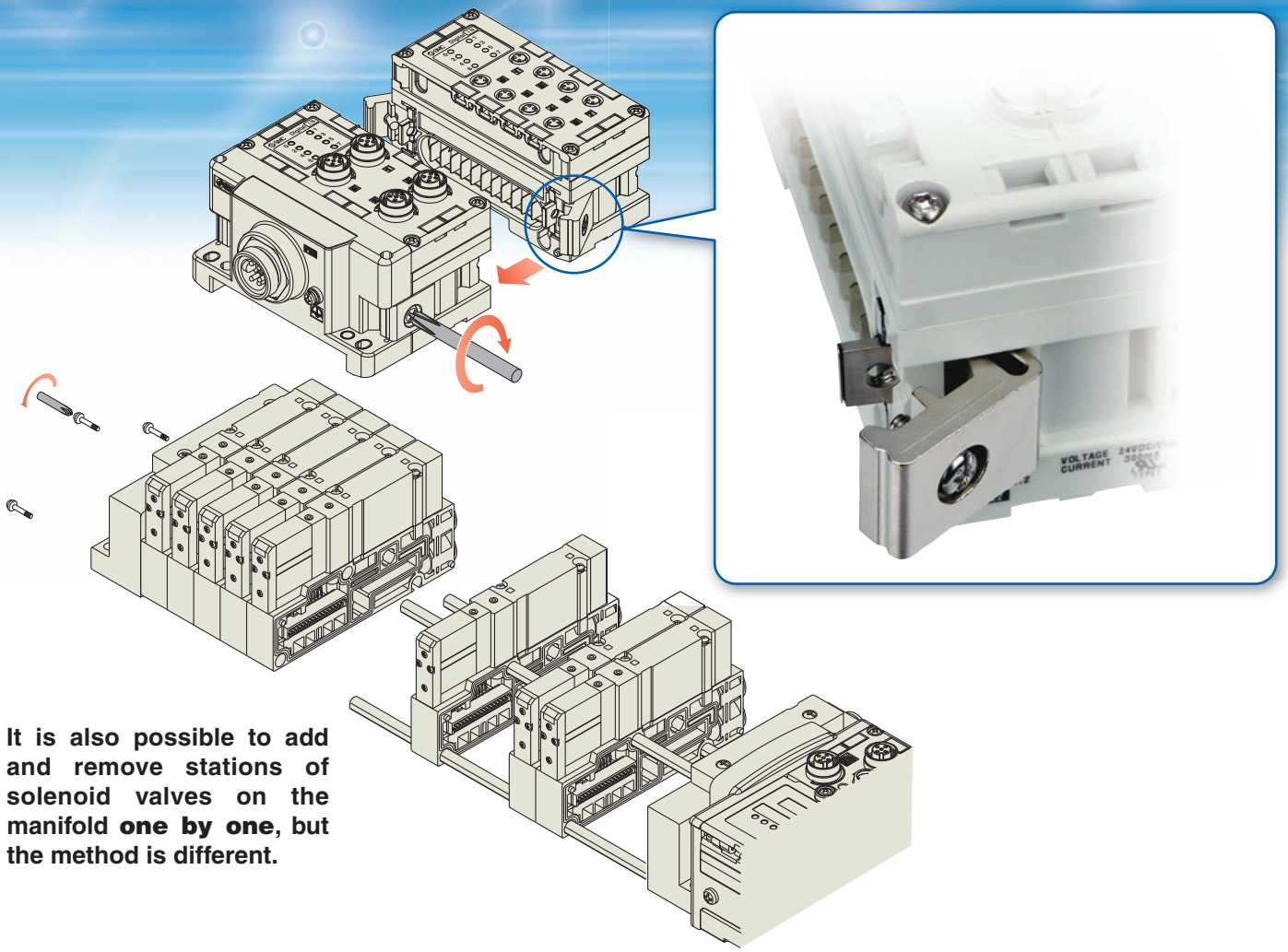

It is also possible to add and remove stations of solenoid valves on the manifold one by one, but the method is different.

Handheld Terminal

Forced input and output function

The input and output signals are controlled forcedly without a PLC. The startup time after facility introduction can be shortened.

Password setting function

Simple operation

Cursor button: Mode and setting change, etc.

Function key: Value and command entry, etc.

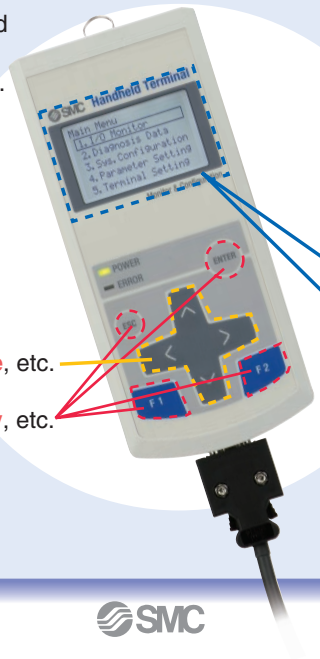

Can be used for the adjustment of internal parameters and the monitoring of input and output signal status.

Parameters: Analog data format
Analog measurement range
Input filter selection
Counter function
Open circuit detection function, etc.

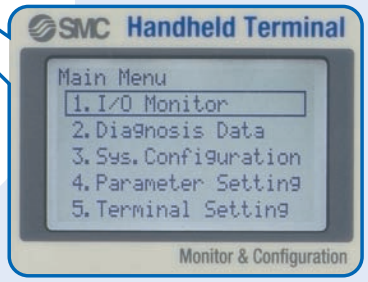

Fieldbus System
Series EX600

How to Order

SI Unit

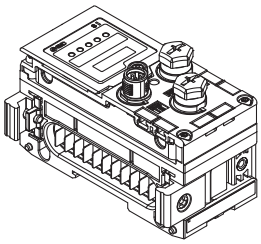

EX600-S □□□

Protocol

Symbol	Description
PR	PROFIBUS DP
DN	DeviceNet™
MJ	CC-Link
EN	EtherNet/IP™ Note 1)
EC	EtherCAT Note 1)

Output type

Symbol	Description
1	PNP (Negative common)
2	NPN (Positive common)

Version

Symbol	Description
Nil	When MJ or EN or EC is selected
A	When PR or DN is selected

Digital Input Unit

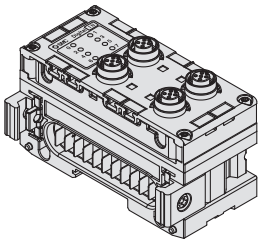

EX600-DX □□

Input type

Symbol	Description
P	PNP
N	NPN

Number of inputs, open circuit detection, and connector

Symbol	Number of inputs	Open circuit detection	Connector
B	8 inputs	No	M12 connector (5 pins) 4 pcs.
C	8 inputs	No	M8 connector (3 pins) 8 pcs.
C1	8 inputs	Yes	M8 connector (3 pins) 8 pcs.
D	16 inputs	No	M12 connector (5 pins) 8 pcs.
E	16 inputs	No	D-sub connector (25 pins) Note1) 2)
F	16 inputs	No	Spring type terminal block (32 pins) Note1) 2)

Digital Output Unit

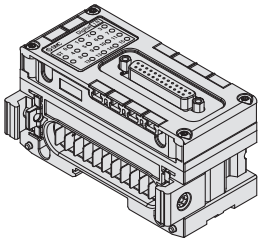

EX600-DY □□

Output type

Symbol	Description
P	PNP
N	NPN

Number of outputs and connector

Symbol	Number of outputs	Connector
B	8 outputs	M12 connector (5 pins) 4 pcs.
E	16 outputs	D-sub connector (25 pins) Note1) 2)
F	16 outputs	Spring type terminal block (32 pins) Note1) 2)

Digital Input/Output Unit

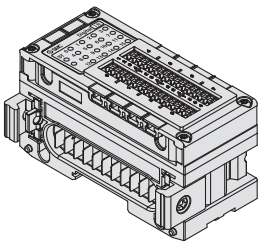

EX600-DM □□

Input/Output type

Symbol	Description
P	PNP
N	NPN

Number of inputs/outputs and connector

Symbol	Number of inputs	Number of outputs	Connector
E	8 inputs	8 outputs	D-sub connector (25 pins) Note1) 2)
F	8 inputs	8 outputs	Spring type terminal block (32 pins) Note1) 2)

Note 1) Cannot be communicated with the EX600-HT1-□. Refer to page 15 for a table of mountable units.
Note 2) Cannot be connected with the EX600-SPR1, EX600-SPR2, EX600-SDN1, or EX600-SDN2. Refer to page 15 for a table of mountable units.

How rder

Analog Input Unit

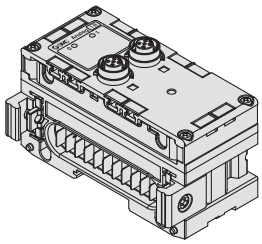

EX600 – AX □

Analog input ● **Number of input channels and connector** ●

Symbol	Number of input channels	Connector
A	2 channels	M12 connector (5 pins) 2 pcs.

Analog Output Unit

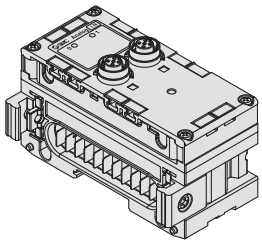

EX600 – AY □

Analog output ● **Number of output channels and connector** ●

Symbol	Number of output channels	Connector
A	2 channels	M12 connector (5 pins) 2 pcs. Note1) 2)

Analog Input/Output Unit

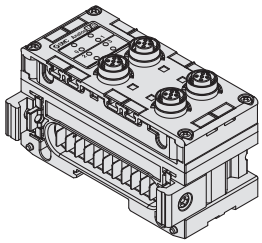

EX600 – AM □

Analog input/output ● **Number of input/output channels and connector** ●

Symbol	Number of input channels	Number of output channels	Connector
B	2 channels	2 channels	M12 connector (5 pins) 4 pcs. Note1) 2)

End Plate

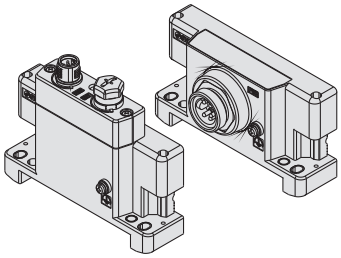

EX600 – ED □ – □

Power connector ●

Symbol	Connector
2	M12 (5 pins)
3	7/8 inch (5 pins)

● **Mounting method**

Symbol	Description
Nil	Without DIN rail mounting bracket
2	With DIN rail mounting bracket
3	With DIN rail mounting bracket (Specialized for Series SY)

Handheld Terminal

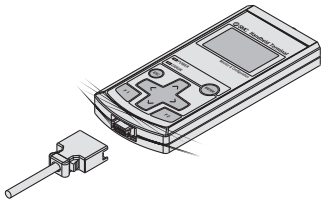

EX600 – HT1A – □

Handheld Terminals are not yet UL-compatible.

Version ● **Cable length** ●

Symbol	Description
Nil	No cable
1	1 m
3	3 m

Note 1) Cannot be communicated with the EX600-HT1-□. Refer to page 15 for a table of mountable units.
Note 2) Cannot be connected with the EX600-SPR1, EX600-SPR2, EX600-SDN1, or EX600-SDN2. Refer to page 15 for a table of mountable units.

SI Unit Specifications

All Units Common Specifications

Environmental resistance	**Operating temperature range**	14 to 122°F
	Storage temperature range	–4 to 140°F
	Operating humidity range	35 to 85% RH (No dew condensation)
	Withstand voltage Note)	500 VAC for 1 minute between external terminals and FE
	Insulation resistance Note)	500 VDC, 10 MΩ or more between external terminals and FE

Note) Except Handheld Terminals

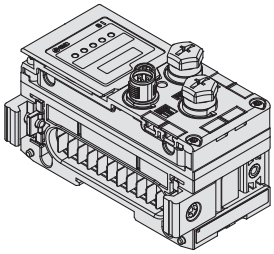

EX600-SPR□A

SI Unit (EX600-SPR□A)

Model		EX600-SPR1A	EX600-SPR2A
Communication	**Protocol**	PROFIBUS DP (DP-V0)	
	Device type	PROFIBUS DP Slave	
	Communication speed	9.6/19.2/45.45/93.75/187.5/500 kbps 1.5/3/6/12 Mbps	
	Configuration file	GSD file	
	I/O occupation area (Inputs/Outputs)	Max. (512 inputs/512 outputs)	
Terminating resistor		Internally implemented	
Internal current consumption (Power supply for Control/Input)		80 mA or less	
Output	**Output type**	PNP (Negative common)	NPN (Positive common)
	Number of outputs	32 outputs (8/16/24/32 outputs selectable)	
	Load	Solenoid valve with surge voltage suppressor 24 VDC, 1.5 W or less (SMC)	
	Power supply	24 VDC, 2 A	
	Fail safe	HOLD/CLEAR/Forced power ON	
	Protection	Short-circuit protection	
Enclosure		IP67 (Manifold assembly)	
Standards		CE marking, UL (CSA), RoHS recognition	
Weight		0.6 lbs (300 g)	

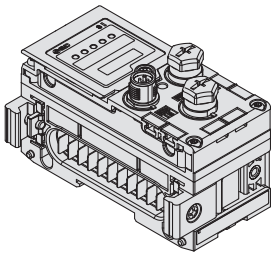

EX600-SDN□A

SI Unit (EX600-SDN□A)

Model		EX600-SDN1A	EX600-SDN2A
Communication	**Protocol**	DeviceNet™: Volume 1 (Edition 2.1), Volume 3 (Edition 1.1)	
	Device type	Group 2 Only Server	
	Communication speed	125/250/500 kbps	
	Configuration file	EDS file	
	I/O occupation area (Inputs/Outputs)	Max. (512 inputs/512 outputs)	
	Applicable messages	Duplicate MAC ID Check Message Group 2 Only Unconnected Explicit Message Explicit Message (Group 2) Poll I/O Message (Predefined M/S Connection set)	
DeviceNet™ power supply		11 to 25 VDC	
Internal current consumption (Power supply for Control/Input)		55 mA or less	
Output	**Output type**	PNP (Negative common)	NPN (Positive common)
	Number of outputs	32 outputs (8/16/24/32 outputs selectable)	
	Load	Solenoid valve with surge voltage suppressor 24 VDC, 1.5 W or less (SMC)	
	Power supply	24 VDC, 2 A	
	Fail safe	HOLD/CLEAR/Forced power ON	
	Protection	Short-circuit protection	
Enclosure		IP67 (Manifold assembly)	
Standards		CE marking, UL (CSA), RoHS recognition	
Weight		0.6 lbs (300 g)	

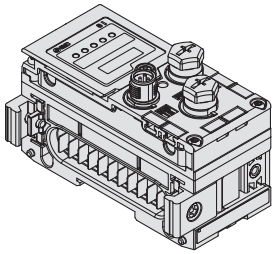

EX600-SMJ□

SI Unit (EX600-SMJ□)

Model		EX600-SMJ1	EX600-SMJ2
Communication	Protocol	CC-Link (Ver. 1.10, Ver. 2.00)	
	Station type	Remote Device Station	
	Communication speed	156/625 kbps 2.5/5/10 Mbps	
	I/O occupation area (Inputs/Outputs)	Max. (512 inputs/512 outputs) 1/2/3/4 stations occupied	
Internal current consumption (Power supply for Control/Input)		75 mA or less	
Output	Output type	PNP (Negative common)	NPN (Positive common)
	Number of outputs	32 outputs (8/16/24/32 outputs selectable)	
	Load	Solenoid valve with surge voltage suppressor 24 VDC, 1.5 W or less (SMC)	
	Power supply	24 VDC, 2 A	
	Fail safe	HOLD/CLEAR/Forced power ON	
	Protection	Short-circuit protection	
Enclosure		IP67 (Manifold assembly)	
Standards		CE marking, UL (CSA), RoHS recognition	
Weight		0.6 lbs (300 g)	

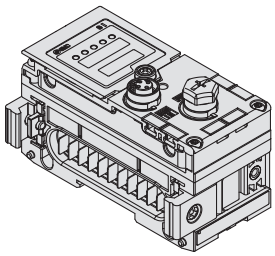

EX600-SEN□

SI Unit (EX600-SEN□)

Model		EX600-SEN1	EX600-SEN2
Communication	Protocol	EtherNet/IP™ (Conformance version: Composite 6)	
	Media	100 BASE-TX	
	Communication speed	10/100 Mbps (Automatic/Manual)	
	Communication method	Full duplex/Half duplex (Automatic/Manual)	
	Configuration file	EDS file	
	I/O occupation area (Inputs/Outputs)	Max. (512 inputs/512 outputs)	
	IP address setting range	SI Unit switch settings: 192.168.0 or 1.1 to 254 Through DHCP server: Optional address	
	Device information	Vendor ID: 7 (SMC Corporation) Product type: 12 (Communication Adapter) Product code: 126	
Internal current consumption (Power supply for Control/Input)		120 mA or less	
Output	Output type	PNP (Negative common)	NPN (Positive common)
	Number of outputs	32 outputs (8/16/24/32 outputs selectable)	
	Load	Solenoid valve with surge voltage suppressor 24 VDC, 1.5 W or less (SMC)	
	Power supply	24 VDC, 2 A	
	Fail safe	HOLD/CLEAR/Forced power ON	
	Protection	Short-circuit protection	
Enclosure		IP67 (Manifold assembly)	
Standards		CE marking, UL (CSA), RoHS recognition	
Weight		0.6 lbs (300 g)	

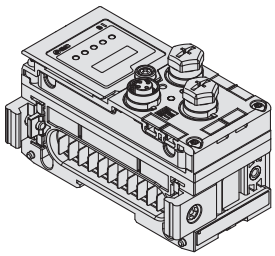

EX600-SEC□

SI Unit (EX600-SEC□)

Model		EX600-SEC1	EX600-SEC2
Communication	Protocol	EtherCAT (Conformance Test Record V.1.2)	
	Communication speed	100 Mbps	
	Configuration file	XML file	
	I/O occupation area (Inputs/Outputs)	Max. (512 inputs/512 outputs)	
Internal current consumption (Power supply for Control/Input)		100 mA or less	
Output	Output type	PNP (Negative common)	NPN (Positive common)
	Number of outputs	32 outputs (8/16/24/32 outputs selectable)	
	Load	Solenoid valve with surge voltage suppressor 24 VDC, 1.5 W or less (SMC)	
	Power supply	24 VDC, 2 A	
	Fail safe	HOLD/CLEAR/Forced power ON	
	Protection	Short-circuit protection	
Enclosure		IP67 (Manifold assembly)	
Standards		CE marking, UL (CSA), RoHS recognition	
Weight		0.6 lbs (300 g)	

Digital Unit Specifications

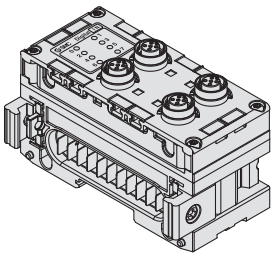

EX600-DX□B

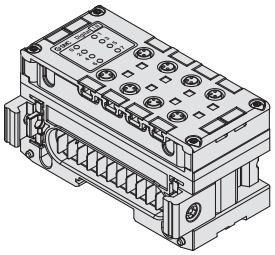

EX600-DX□C□

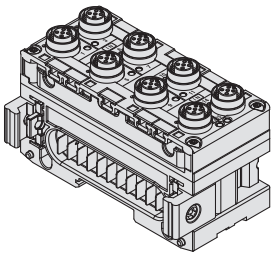

EX600-DX□D

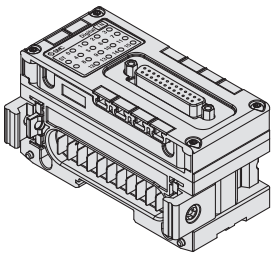

EX600-DX□E

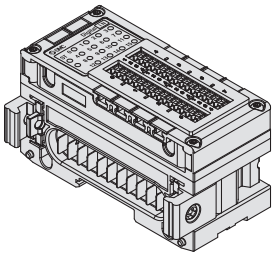

EX600-DX□F

Digital Input Unit

Model			EX600-DXPB	EX600-DXNB	EX600-DXPC□	EX600-DXNC□	EX600-DXPD	EX600-DXND
Input	Input type		PNP	NPN	PNP	NPN	PNP	NPN
	Input connector		M12 (5-pin) socket Note 1)		M8 (3-pin) socket		M12 (5-pin) socket Note 1)	
	Number of inputs		8 inputs (2 inputs/connector)		8 inputs (1 input/connector)		16 inputs (2 inputs/connector)	
	Supplied voltage		24 VDC					
	Max. supplied current		0.5 A/connector 2 A/unit		0.25 A/connector 2 A/unit		0.5 A/connector 2 A/unit	
	Protection		Short-circuit protection					
	Input current (at 24 VDC)		9 mA or less					
	ON voltage		17 V or more (At NPN input, between the pin for input terminal and supplied voltage of +24 V) (At PNP input, between the pin for input terminal and supplied voltage of 0 V)					
	OFF voltage		5 V or less (At NPN input, between the pin for input terminal and supplied voltage of +24 V) (At PNP input, between the pin for input terminal and supplied voltage of 0 V)					
	Open circuit detection current	2 wires	—		0.5 mA/input Note 2)		—	
		3 wires	—		0.5 mA/connector Note 2)		—	
Current consumption			50 mA or less		55 mA or less		70 mA or less	
Enclosure			IP67 (Manifold assembly)					
Standards			CE marking, UL (CSA), RoHS recognition					
Weight			0.6 lbs (300 g)		0.6 lbs (275 g)		0.75 lbs (340 g)	

Note 1) M12 (4-pin) connector can be connected.
Note 2) Function only applies to the EX600-DX□C1.

Model		EX600-DXPE	EX600-DXNE	EX600-DXPF	EX600-DXNF
Input	Input type	PNP	NPN	PNP	NPN
	Input connector	D-sub socket (25 pins) Lock screw: No.4-40 UNC		Spring type terminal block (32 pins)	
	Number of inputs	16 inputs		16 inputs (2 inputs x 8 blocks)	
	Supplied voltage	24 VDC			
	Max. supplied current	2 A/unit		0.5 A/block 2 A/unit	
	Protection	Short-circuit protection			
	Input current (at 24 VDC)	5 mA or less			
	ON voltage	17 V or more (At NPN input, between the pin for input terminal and supplied voltage of +24 V) (At PNP input, between the pin for input terminal and supplied voltage of 0 V)			
	OFF voltage	5 V or less (At NPN input, between the pin for input terminal and supplied voltage of +24 V) (At PNP input, between the pin for input terminal and supplied voltage of 0 V)			
Applicable wire		—		0.08 to 1.5 mm² (AWG16 to 28)	
Current consumption		50 mA or less		55 mA or less	
Enclosure		IP40 (Manifold assembly)			
Standards		CE marking, UL (CSA), RoHS recognition			
Weight		0.6 lbs (300 g)			

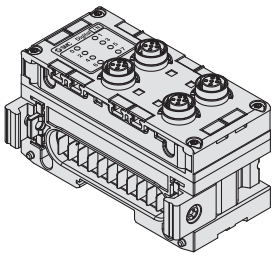

EX600-DY□B

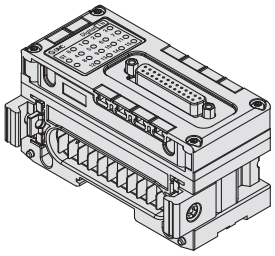

EX600-DY□E
EX600-DM□E

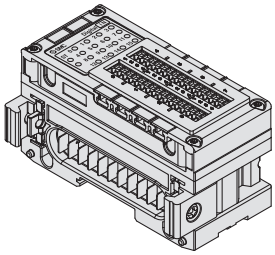

EX600-DY□F
EX600-DM□F

Digital Output Unit

Model		EX600-DYPB	EX600-DYNB	EX600-DYPE	EX600-DYNE	EX600-DYPF	EX600-DYNF
Output	**Output type**	PNP	NPN	PNP	NPN	PNP	NPN
	Output connector	M12 (5-pin) socket Note)		D-sub socket (25 pins) Lock screw: No.4-40 UNC		Spring type terminal block (32 pins)	
	Number of outputs	8 outputs (2 outputs/connector)		16 outputs		16 outputs (2 outputs x 8 blocks)	
	Supplied voltage	24 VDC					
	Max. load current	0.5 A/output 2 A/unit					
	Protection	Short-circuit protection					
Applicable wire		—		—		0.08 to 1.5 mm^2 (AWG16 to 28)	
Current consumption		50 mA or less					
Enclosure		IP67 (Manifold assembly)		IP40 (Manifold assembly)			
Standards		CE marking, UL (CSA), RoHS recognition					
Weight		0.6 lbs (300 g)					

Note) M12 (4-pin) connector can be connected.

Digital Input/Output Unit

Model		EX600-DMPE	EX600-DMNE	EX600-DMPF	EX600-DMNF
Input/Output type		PNP	NPN	PNP	NPN
Connector		D-sub socket (25 pins) Lock screw: No.4-40 UNC		Spring type terminal block (32 pins)	
Input	**Number of inputs**	8 inputs		8 inputs (2 inputs x 4 blocks)	
	Supplied voltage	24 VDC			
	Max. supplied current	2 A/unit		0.5 A/block 2 A/unit	
	Protection	Short-circuit protection			
	Input current (at 24 VDC)	5 mA or less			
	ON voltage	17 V or more (At NPN input, between the pin for input terminal and supplied voltage of +24 V) (At PNP input, between the pin for input terminal and supplied voltage of 0 V)			
	OFF voltage	5 V or less (At NPN input, between the pin for input terminal and supplied voltage of +24 V) (At PNP input, between the pin for input terminal and supplied voltage of 0 V)			
Output	**Number of outputs**	8 outputs		8 outputs (2 outputs x 4 blocks)	
	Supplied voltage	24 VDC			
	Max. load current	0.5 A/output 2 A/unit			
	Protection	Short-circuit protection			
Applicable wire		—		0.08 to 1.5 mm^2 (AWG16 to 28)	
Current consumption		50 mA or less		60 mA or less	
Enclosure		IP40 (Manifold assembly)			
Standards		CE marking, UL (CSA), RoHS recognition			
Weight		0.6 lbs (300 g)			

Analog Unit Specifications

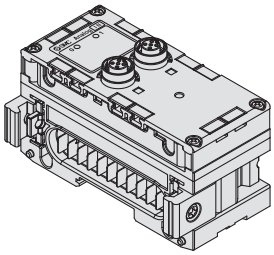

EX600-AXA

Analog Input Unit

Model			EX600-AXA	
Input	Input type		Voltage input	Current input
	Input connector		M12 (5-pin) socket Note 1)	
	Input channel		2 channels (1 channel/connector)	
	Supplied voltage		24 VDC	
	Max. supplied current		0.5 A/connector	
	Protection		Short-circuit protection	
	Input signal range	12 bit resolution	0 to 10 V, 1 to 5 V, 0 to 5 V	0 to 20 mA, 4 to 20 mA
		16 bit resolution	–10 to 10 V, –5 to 5 V	–20 to 20 mA
	Max. rated input signal		±15 V	±22 mA Note 2)
	Input impedance		100 kΩ	50 Ω
	Linearity (77°F)		±0.05% F.S.	
	Repeatability (77°F)		±0.15% F.S.	
	Absolute accuracy (77°F)		±0.5% F.S.	±0.6% F.S.
Current consumption			70 mA or less	
Enclosure			IP67 (Manifold assembly)	
Standards			CE marking, UL (CSA), RoHS recognition	
Weight			0.6 lbs (290 g)	

Note 1) M12 (4-pin) connector can be connected.
Note 2) When input signal exceeds 22 mA, the protection function activates and the input signal is interrupted.

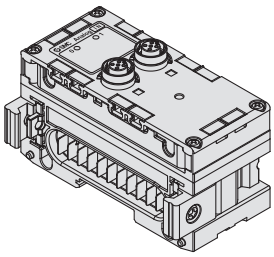

EX600-AYA

Analog Output Unit

Model			EX600-AYA	
Output	Output type		Voltage output	Current output
	Output connector		M12 (5-pin) socket Note)	
	Output channel		2 channels (1 channel/connector)	
	Supplied voltage		24 VDC	
	Max. load current		0.5 A/connector	
	Protection		Short-circuit protection	
	Output signal range	12 bit resolution	0 to 10 V, 1 to 5 V, 0 to 5 V	0 to 20 mA, 4 to 20 mA
	Load impedance		1 kΩ or more	600 Ω or less
	Linearity (77°F)		±0.05% F.S.	
	Repeatability (77°F)		±0.15% F.S.	
	Absolute accuracy (77°F)		±0.5% F.S.	±0.6% F.S.
Current consumption			70 mA or less	
Enclosure			IP67 (Manifold assembly)	
Standards			CE marking, UL (CSA), RoHS recognition	
Weight			0.6 lbs (290 g)	

Note) M12 (4-pin) connector can be connected.

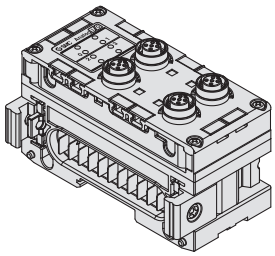

EX600-AMB

Analog Input/Output Unit

Model			EX600-AMB	
Input	Input type		Voltage input	Current input
	Input connector		M12 (5-pin) socket Note 1)	
	Input channel		2 channels (1 channel/connector)	
	Supplied voltage		24 VDC	
	Max. supplied current		0.5 A/connector	
	Protection		Short-circuit protection	
	Input signal range	12 bit resolution	0 to 10 V, 1 to 5 V, 0 to 5 V	0 to 20 mA, 4 to 20 mA
	Max. rated input signal		15 V	22 mA Note 2)
	Input impedance		100 kΩ	250 Ω
	Linearity (77°F)		±0.05% F.S.	
	Repeatability (77°F)		±0.15% F.S.	
	Absolute accuracy (77°F)		±0.5% F.S.	±0.6% F.S.
Output	Output type		Voltage output	Current output
	Output connector		M12 (5-pin) socket Note 1)	
	Output channel		2 channels (1 channel/connector)	
	Supplied voltage		24 VDC	
	Max. load current		0.5 A/connector	
	Protection		Short-circuit protection	
	Output signal range	12 bit resolution	0 to 10 V, 1 to 5 V, 0 to 5 V	0 to 20 mA, 4 to 20 mA
	Load impedance		1 kΩ or more	600 Ω or less
	Linearity (77°F)		±0.05% F.S.	
	Repeatability (77°F)		±0.15% F.S.	
	Absolute accuracy (77°F)		±0.5% F.S.	±0.6% F.S.
Current consumption			100 mA or less	
Enclosure			IP67 (Manifold assembly)	
Standards			CE marking, UL (CSA), RoHS recognition	
Weight			0.6 lbs (300 g)	

Note 1) M12 (4-pin) connector can be connected.
Note 2) When input signal exceeds 22 mA, the protection function activates and the input signal is interrupted.

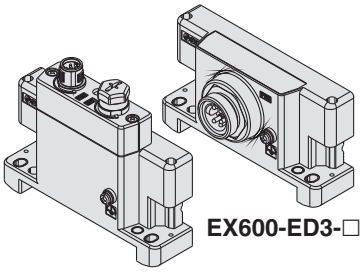

EX600-ED3-□

EX600-ED2-□

End Plate

Model		EX600-ED2-□	EX600-ED3-□
Power specification	Power connector	M12 (5-pin) plug	7/8 inch (5-pin) plug
	Power supply (for Control/Input)	24 VDC ±10%, Class 2, 2 A	24 VDC ±10%, 8 A
	Power supply (for Output)	24 VDC +10/–5%, Class 2, 2 A	24 VDC +10/–5%, 8 A
Enclosure		IP67 (Manifold assembly)	
Standards		CE marking, UL (CSA), RoHS recognition	
Weight		0.4 lbs (170 g)	0.4 lbs (175 g)

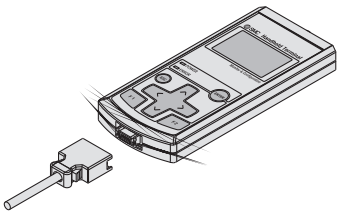

EX600-HT1A-□

Handheld Terminal

Model	EX600-HT1A-□
Power supply	Power supplied from SI Unit connector (24 VDC)
Current consumption	50 mA or less
Display	LCD with backlight
Connection cable	Handheld Terminal cable (1 m ··· EX600-AC010-1, 3 m ··· EX600-AC030-1)
Enclosure	IP20
Standards	CE marking, RoHS recognition
Weight	0.35 lbs (160 g)

Parts Description

SI Unit

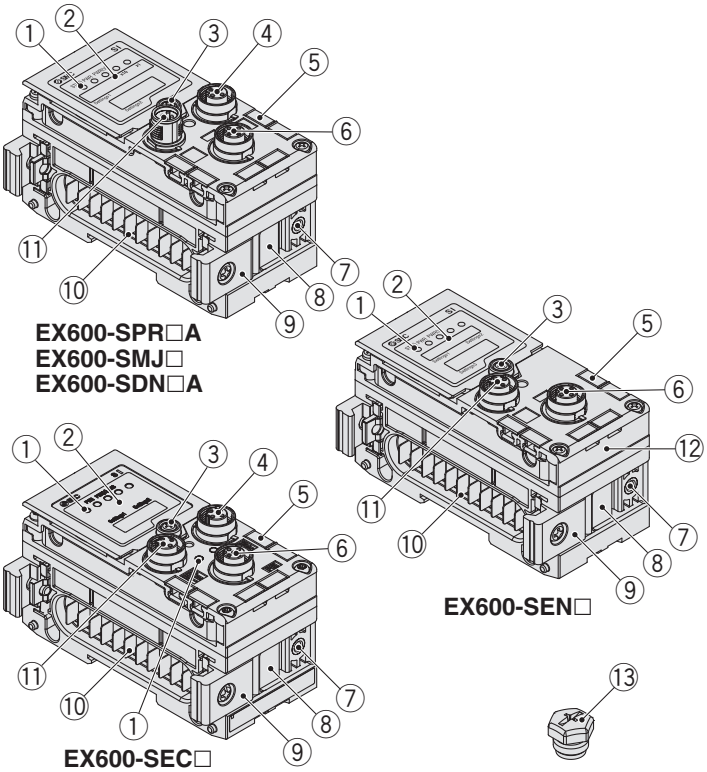

No.	Description	Use
1	**Status indication LED**	Displays unit status.
2	**Indication cover**	Open for setting the switch.
3	**Indication cover set screw**	Loosen for opening the indication cover.
4	**Connector (BUS OUT)**	Connects to the fieldbus output cable.
5	**Marker groove**	Can be used to mount a marker.
6	**Connector (PCI)**	Connects to the Handheld Terminal cable.
7	**Valve Plate mounting holes**	Fixes Valve Plate in place.
8	**Valve Plate mounting groove**	Inserts Valve Plate.
9	**Joint bracket**	Links units to one another.
10	**Connector for unit (Plug)**	Transmits signals to the neighboring unit and supplies power.
11	**Connector (BUS IN)**	Connects to the cable for fieldbus input.
12	**MAC address name plate**	Displays a unique 12-digit MAC address for each SI Unit.
13	**Seal cap**	Mounted on the connectors (BUS OUT and PCI) at the time of shipment.

Handheld Terminal

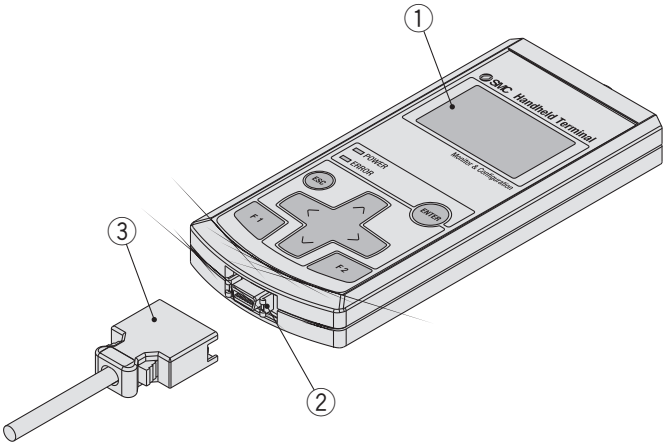

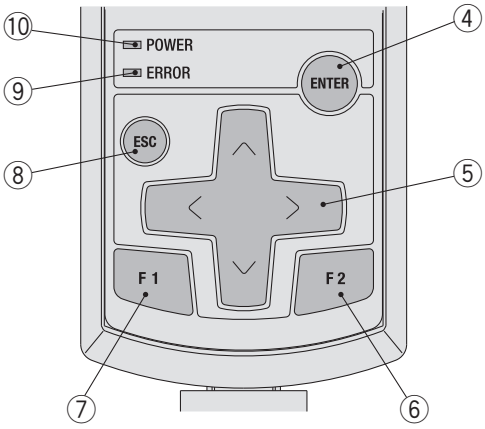

Operation buttons

No.	Description	Use
1	**LCD**	Displays operation and unit information.
2	**Connector**	Connects to the Handheld Terminal cable.
3	**Handheld Terminal cable**	Connects the SI Unit to the Handheld Terminal.
4	**Enter button (ENTER)**	From the selection screen, goes to the screen for the item selected. On the settings screen, registers the settings that have been made so far.
5	**Cursor button (∧ ∨ < >)**	Moves the cursor on the LCD up, down, left or right. Moves the cursor on the selection screen up, down, left or right to make selections. On the settings screen, increases or decreases the value of settings or turns settings on and off.
6	**F2 button (F 2)**	Functions in accordance with on-screen display or instructions.
7	**F1 button (F 1)**	Functions in accordance with on-screen display or instructions.
8	**Escape button (ESC)**	On the selection screen, goes back to the previous screen. On the settings screen, cancels the settings that have been made so far and goes back to the previous screen.
9	**ERROR LED**	Lights up red when the EX600 diagnosis errors occur.
10	**POWER LED**	Connects to the EX600 SI Unit, and lights up green when control/input power supply is on.

Digital Unit

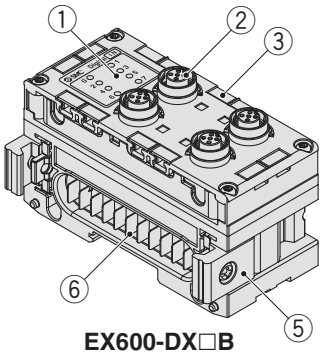

EX600-DX□B
EX600-DY□B

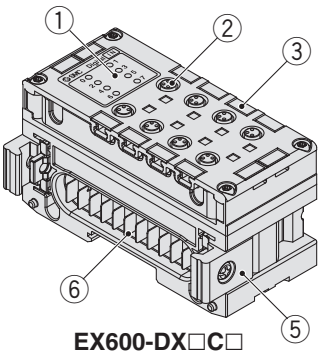

EX600-DX□C□

No.	Description	Use
1	**Status indication LED**	Displays unit status.
2	**Connector**	Connects with input or output devices.
3	**Marker groove**	Can be used to mount a marker.
4	**Lock screw**	Fixes the D-sub connector in place. (No.4-40 UNC)
5	**Joint bracket**	Links units to one another.
6	**Connector for unit (Plug)**	Transmits signals to the neighboring unit and supplies power.

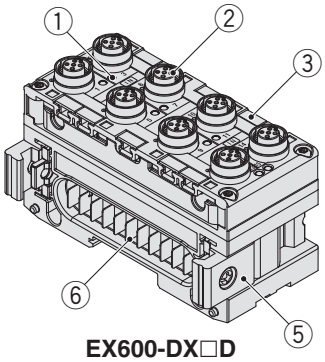

EX600-DX□D

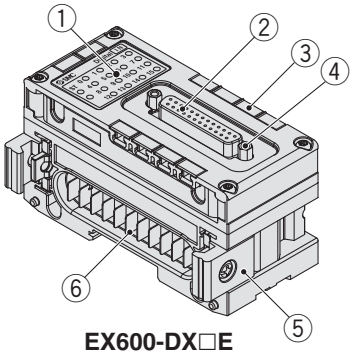

EX600-DX□E
EX600-DY□E
EX600-DM□E

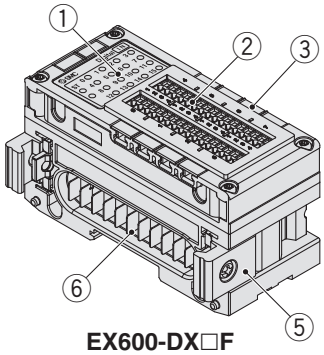

EX600-DX□F
EX600-DY□F
EX600-DM□F

Analog Unit

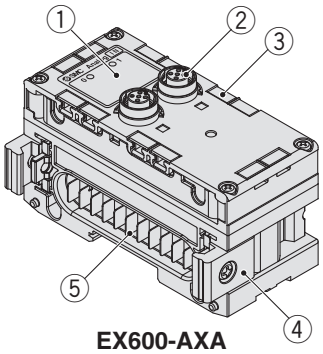

EX600-AXA
EX600-AYA

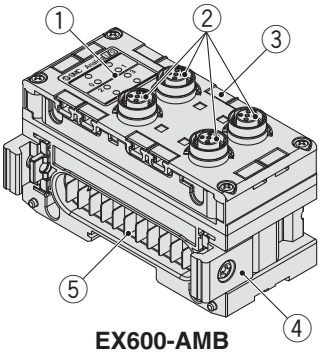

EX600-AMB

No.	Description	Use
1	**Status indication LED**	Displays unit status.
2	**Connector**	Connects with input or output devices.
3	**Marker groove**	Can be used to mount a marker.
4	**Joint bracket**	Links units to one another.
5	**Connector for unit (Plug)**	Transmits signals to the neighboring unit and supplies power.

End Plate

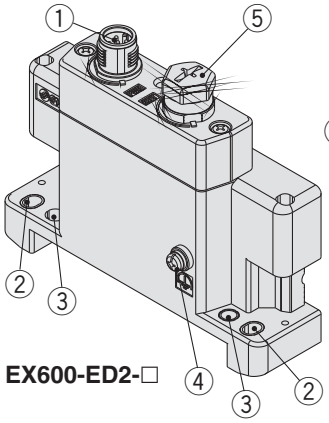

EX600-ED2-□

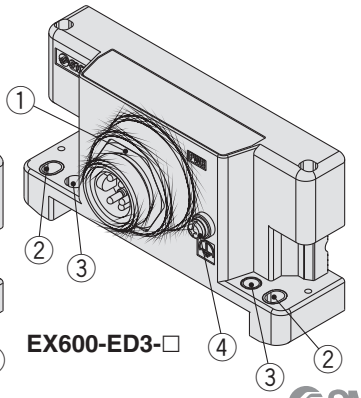

EX600-ED3-□

No.	Description	Use
1	**Power connector**	Supplies power to the unit and/or input/output devices.
2	**Fixing hole for direct mounting**	Connects directly to equipment.
3	**Fixing hole for DIN rail**	Converts to manifold or for DIN rail mounting.
4	**FE terminal**	Connects for grounding to FE (Functional Earth).
5	**Connector (Unused)**	This connector has not yet been used. Do not remove the seal cap.

Dimensions

SI Unit

EX600-SPR□A
EX600-SDN□A
EX600-SMJ□

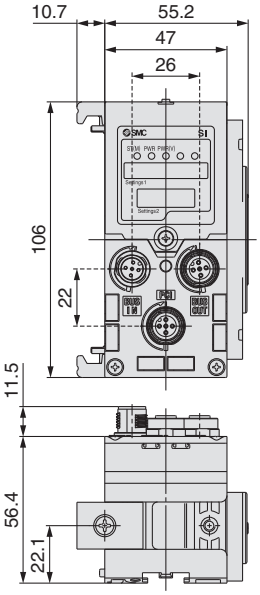

EX600-SEN□
EX600-SEC□

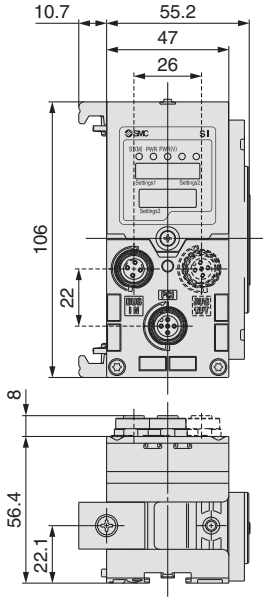

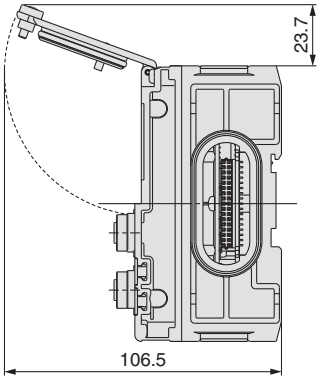

End Plate

EX600-ED2

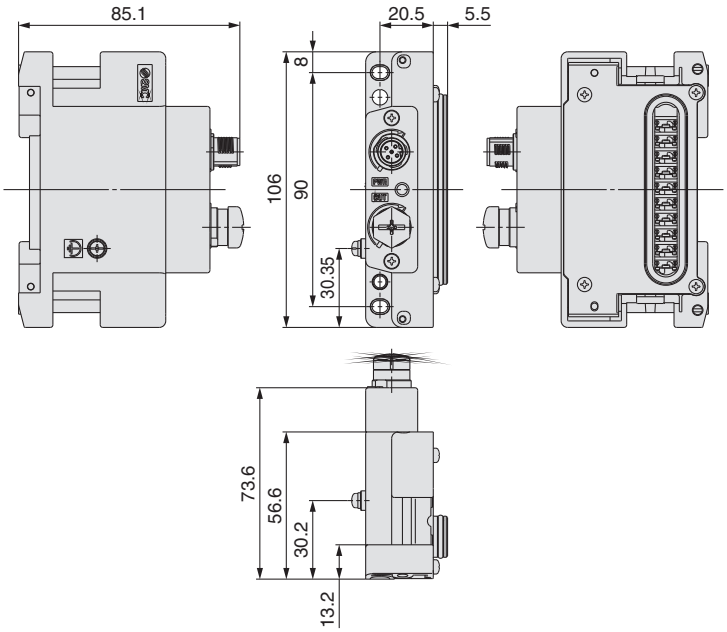

EX600-ED3

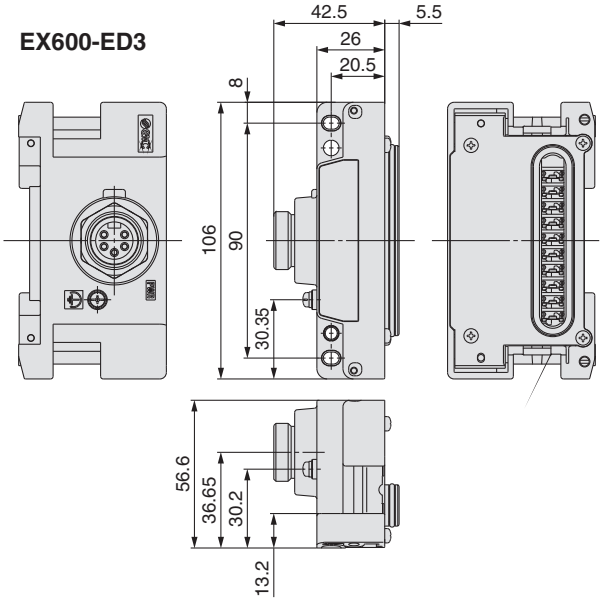

Handheld Terminal

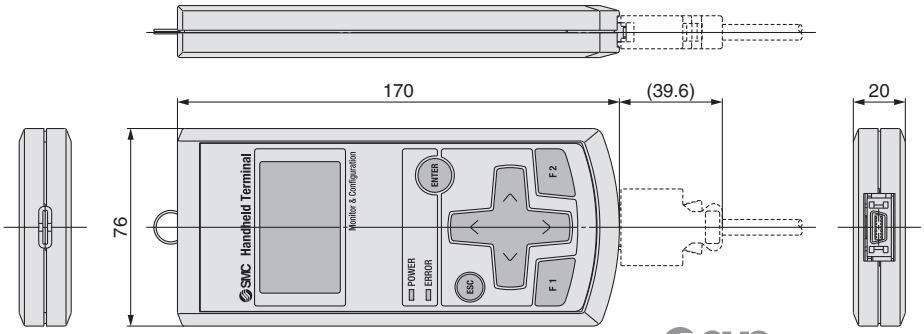

(mm)

Digital Unit

EX600-DX□B
EX600-DY□B

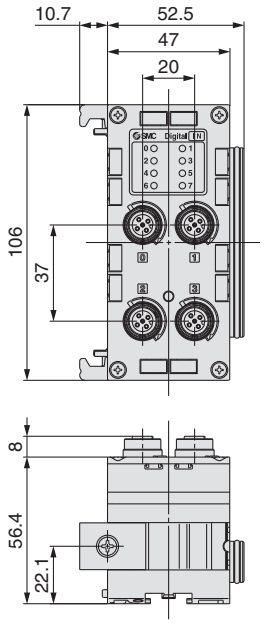

EX600-DX□C□

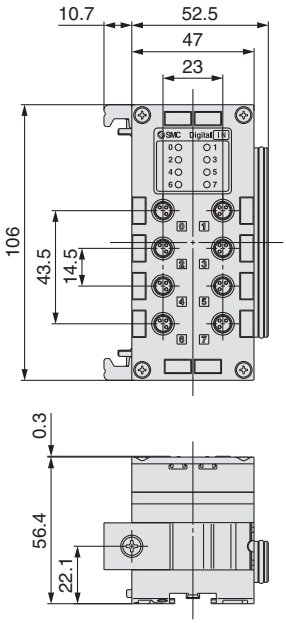

EX600-DX□D

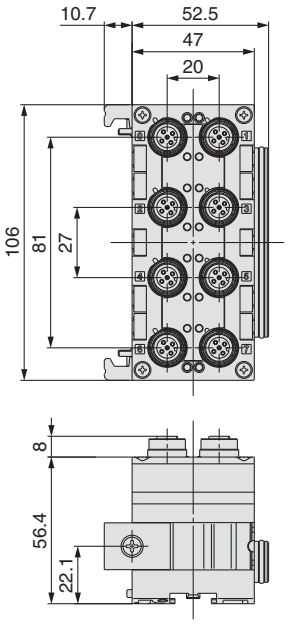

EX600-DX□E
EX600-DY□E
EX600-DM□E

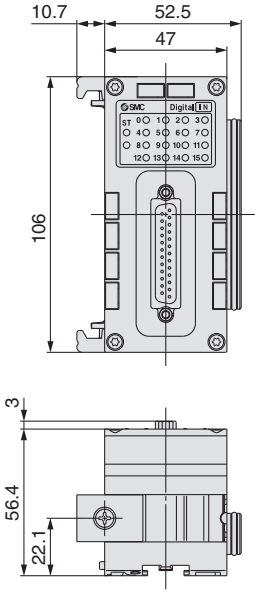

EX600-DX□F
EX600-DY□F
EX600-DM□F

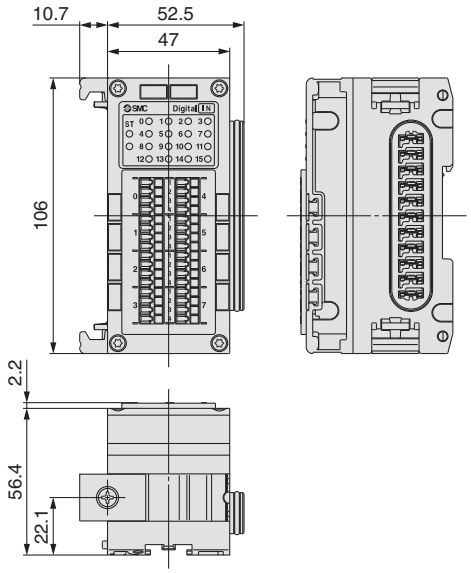

Analog Unit

EX600-AXA
EX600-AYA

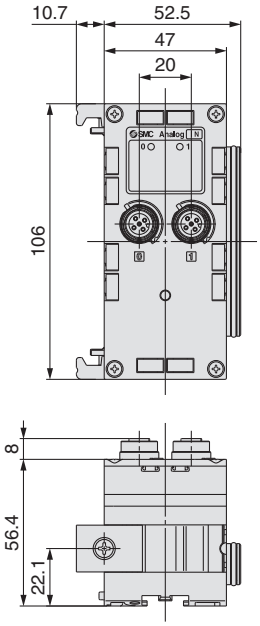

EX600-AMB

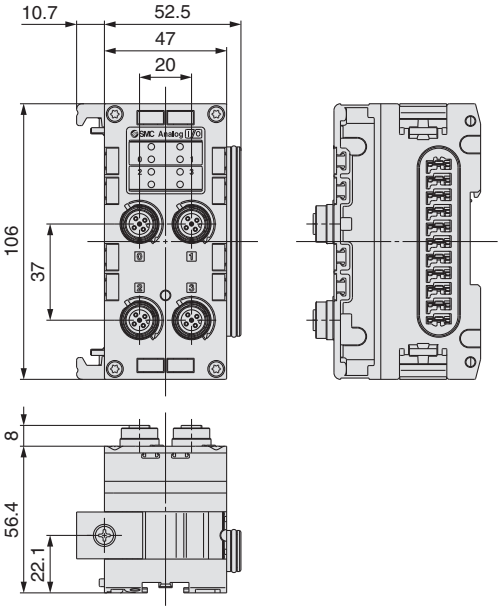

Accessories

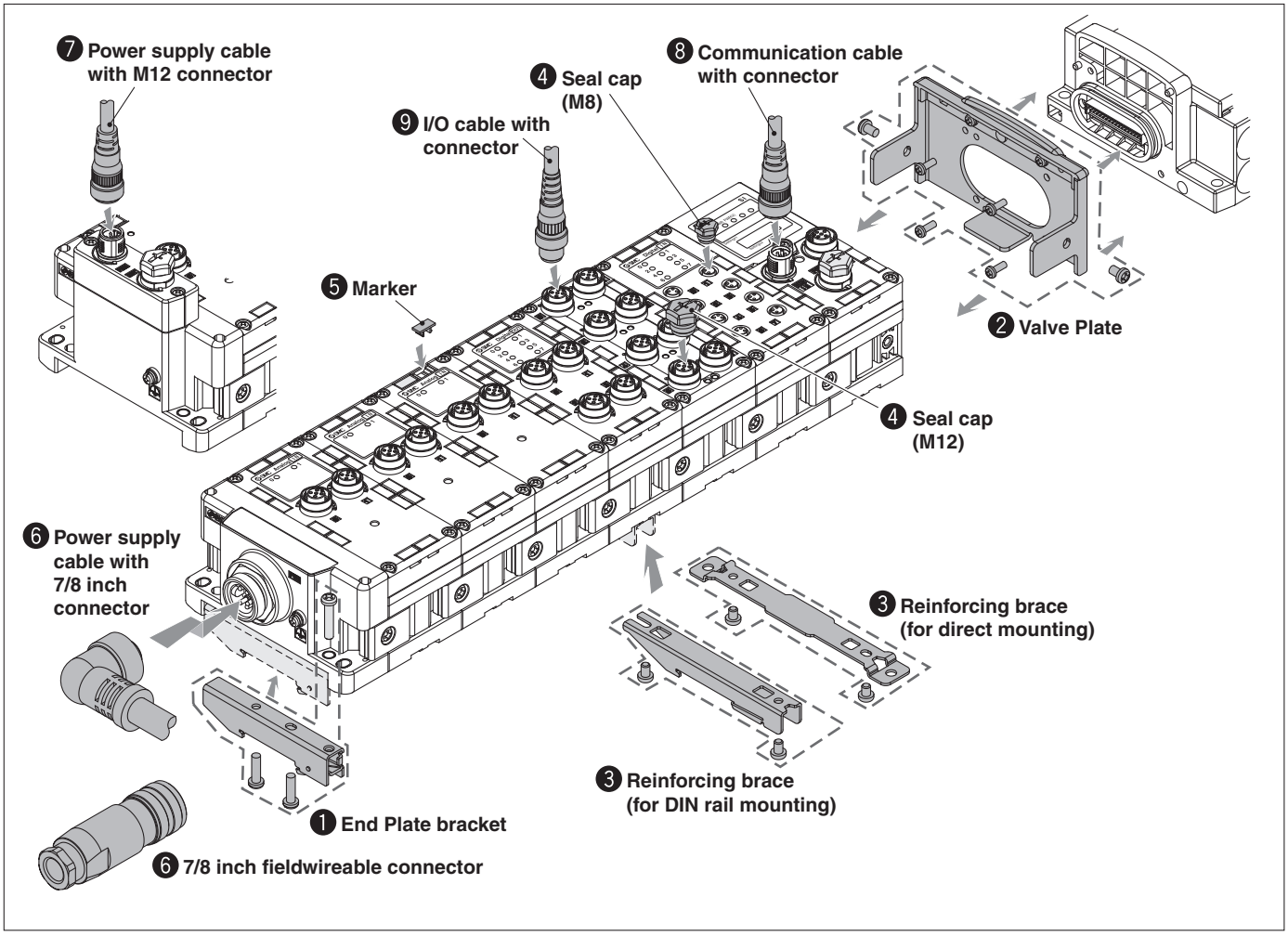

❶ End Plate bracket

This bracket is used for the End Plate of DIN rail mounting.

EX600-ZMA2

Enclosed parts

Round head screw (M4 x 20)	1 pc.
P-tight screw (4 x 14)	2 pcs.

EX600-ZMA3
(Specialized for Series SY)

Enclosed parts

Round head screw with washer (M4 x 20)	1 pc.
P-tight screw (4 x 14)	2 pcs.

❷ Valve Plate

EX600-ZMV1

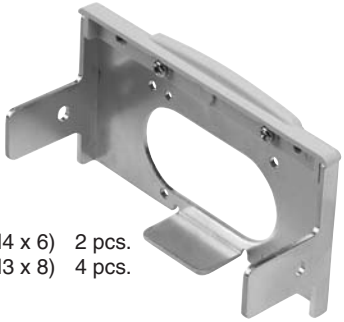

Enclosed parts

Round head screw (M4 x 6)	2 pcs.
Round head screw (M3 x 8)	4 pcs.

EX600-ZMV2
(Specialized for Series SY)

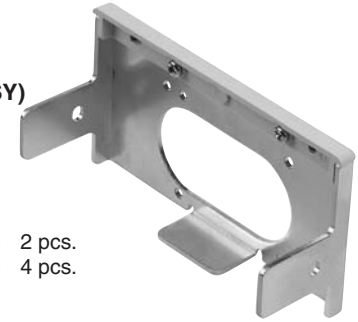

Enclosed parts

Round head screw (M4 x 6)	2 pcs.
Round head screw (M3 x 8)	4 pcs.

❸ Reinforcing brace

This bracket is used on the bottom of the unit at the intermediate position for connecting 6 units or more.

For direct mounting
EX600-ZMB1

Enclosed parts
Round head screw (M4 x 5) 2 pcs.

For DIN rail mounting
EX600-ZMB2

Enclosed parts
Round head screw (M4 x 6) 2 pcs.

❹ Seal cap (10 pcs.)

The seal cap needs to be placed the unused I/O connector.
The specified protection cannot be maintained.

EX9-AWES
For M8

EX9-AWTS
For M12

❺ Marker (1 sheet, 88 pcs.)

The signal name of I/O device and each unit address can be entered and mounted on each unit.

EX600-ZT1

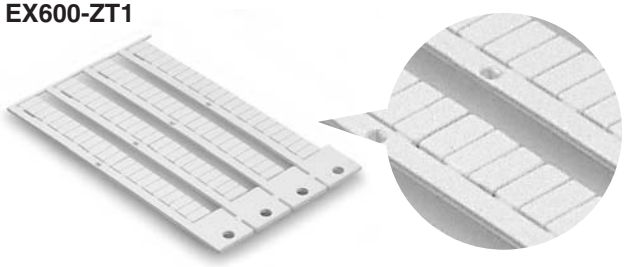

❻ 7/8 inch connector and its related parts

- **Power supply cable with 7/8 inch connector**

PCA-1558810	Straight 2 m
PCA-1558823	Straight 6 m
PCA-1558836	Right angle 2 m
PCA-1558849	Right angle 6 m

- **Fieldwireable 7/8 inch connector** [compatible to AWG22-16]

PCA-1578078	Plug
PCA-1578081	Socket

SPEEDCON and Its Related Parts

❼ Power supply cable with M12 connector (5-pin B-coded)

PCA-1564927	Straight 2 m
PCA-1564930	Straight 6 m
PCA-1564943	Right angle 2 m
PCA-1564969	Right angle 6 m

Note) For M12 connector, description of B-coded for a reverse type is used as a connector shape.

❽ Communication cable with connector/ Communication connector

For EtherNet/IP™ and EtherCAT

- **Communication cable (with connector on one end only)**
  Straight 5 m
  PCA-1446566

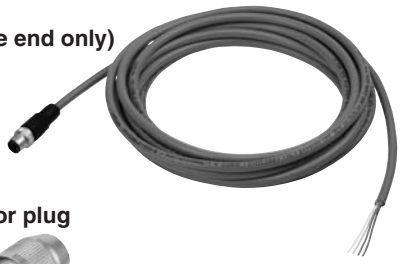

- **Fieldwireable connector plug**
  PCA-1446553

The communication cable with connector and the communication connector that can be used on this series other than EtherNet/IP ™ and EtherCAT are found in the M8/M12 connector catalog.

❾ I/O cable with connector/ I/O connector

The I/O cable with connector and I/O connector that can be used on this series are found in the M8/M12 connector catalog (ES100-73).

Table of Mountable Units

The units that can be connected differ depending on the product number.
Before mounting, please be sure to confirm the types of units that can be connected.

Table of compatible units mountable with each SI Unit

			Product number			
			SI Unit			
			EX600-SPR□ (PROFIBUS DP) EX600-SDN□ (DeviceNet™)	EX600-SPR□A (PROFIBUS DP) EX600-SDN□A (DeviceNet™)	EX600-SMJ□ (CC-Link)	EX600-SEN□ (EtherNet/IP™) EX600-SEC□ (EtherCAT)
			Version Nil	Version A	Version Nil	Version Nil
Product number	Digital Input Unit	EX600-DX□B	○	○	○	○
		EX600-DX□C□	○	○	○	○
		EX600-DX□D	○	○	○	○
		EX600-DX□E	×	○	○	○
		EX600-DX□F	×	○	○	○
	Digital Output Unit	EX600-DY□B	○	○	○	○
		EX600-DY□E	×	○	○	○
		EX600-DY□F	×	○	○	○
	Digital Input/Output Unit	EX600-DM□E	×	○	○	○
		EX600-DM□F	×	○	○	○
	Analog Input Unit	EX600-AXA	○	○	○	○
	Analog Output Unit	EX600-AYA	×	○	○	○
	Analog Input/Output Unit	EX600-AMB	×	○	○	○
	Handheld Terminal	EX600-HT1-□	○	○	○	×
		EX600-HT1A-□	○	○	○	○

Table of compatible units capable of communication with Handheld Terminals

			Product number	
			Handheld Terminal	
			EX600-HT1-□	EX600-HT1A-□
			Version Nil	Version A
Product number	SI Unit	EX600-SPR□ (PROFIBUS DP)	○	○
		EX600-SPR□A (PROFIBUS DP)	○	○
		EX600-SDN□ (DeviceNet™)	○	○
		EX600-SDN□A (DeviceNet™)	○	○
		EX600-SMJ□ (CC-Link)	○	○
		EX600-SEN□ (EtherNet/IP™)	×	○
		EX600-SEC□ (EtherCAT)	×	○
	Digital Input Unit	EX600-DX□B	○	○
		EX600-DX□C□	○	○
		EX600-DX□D	○	○
		EX600-DX□E	×	○
		EX600-DX□F	×	○
	Digital Output Unit	EX600-DY□B	○	○
		EX600-DY□E	×	○
		EX600-DY□F	×	○
	Digital Input/Output Unit	EX600-DM□E	×	○
		EX600-DM□F	×	○
	Analog Input Unit	EX600-AXA	○	○
	Analog Output Unit	EX600-AYA	×	○
	Analog Input/Output Unit	EX600-AMB	×	○

Manifold Solenoid Valves for *Series EX600*

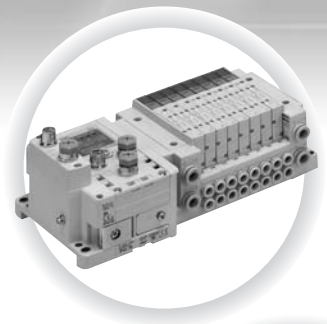

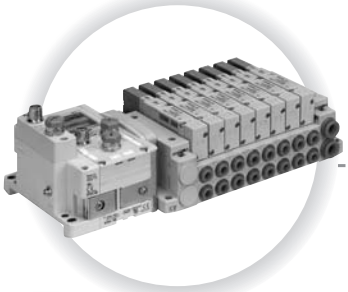

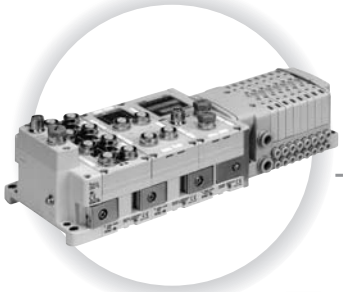

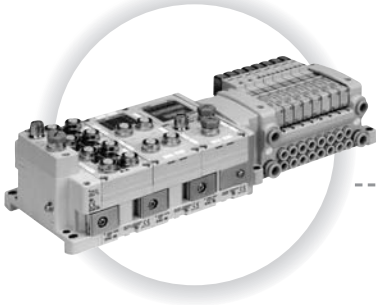

Type 10
Side Ported

Type 11
Bottom Ported

For Series EX600
Plug-in Connector Connecting Base
Series SY3000/5000

CE RoHS

How to Order Manifold

Refer to the SY3000/5000 series catalog (CAT.ES11-103) for Type 11/Bottom ported dimensions.

SS5Y 3 – 10 S6 Q □ 2 – 05 U – C6 □

❶ ❷ ❸ ❹ ❺ ❻ ❼ ❽ ❾

❶ Series

3	SY3000
5	SY5000

❷ Type

10	Side ported
11	Bottom ported

∗ The SY5000 manifold base is used for mixed mounting of the SY3000/5000 and bottom ported of the SY3000. When ordering, refer to "How to Order Manifold" (for plug-in mixed mounting) in the SY series catalog.

❸ SI Unit

0	Without SI Unit
Q	For DeviceNet™
N	For PROFIBUS DP
V	For CC-Link
ZE	For EtherNet/IP™
D	For EtherCAT

Note 1) I/O Unit cannot be mounted without SI Unit.
Note 2) Valve Plate which connects manifold and SI Unit is not mounted to a valve without SI Unit. Refer to page 51 for mounting method.

❹ SI Unit common, End Plate type

SI Unit common	Power supply with M12 connector	Power supply with 7/8 inch connector
Without SI Unit	Nil	
SI Unit Positive common	2	3
SI Unit Negative common	4	5

Note) Without SI Unit, the symbol is nil.

❺ I/O Unit stations

Nil	None
1	1 station
⋮	⋮
9	9 stations

Note 1) Without SI Unit, the symbol is nil.
Note 2) SI Unit is not included in I/O Unit stations.
Note 3) When I/O Unit is selected, it is shipped separately, and assembled by customer. Refer to the attached operation manual for mounting method.
Note 4) Refer to page 50 for details on enclosure.

❻ Valve stations

Symbol	Stations	Note
02	2 stations	Double wiring Note 1)
⋮	⋮	
16	16 stations	
02	2 stations	Specified layout Note 2) (Available up to 32 solenoids)
⋮	⋮	
24	24 stations	

Note 1) Double wiring: 2-position single, double, 3-position and 4-position valves can be used on all manifold stations. Use of a 2-position single solenoid will result in an unused control signal. If this is not desired, order with a specified layout.
Note 2) Specified layout: Indicate the wiring specifications on the manifold specification sheet. (Note that 2-position double, 3-position and 4-position valves cannot be used where single wiring has been specified.)
Note 3) This also includes the number of blanking plate assembly.

How to Order Manifold Assembly

Example (SS5Y3-10S6□-□)

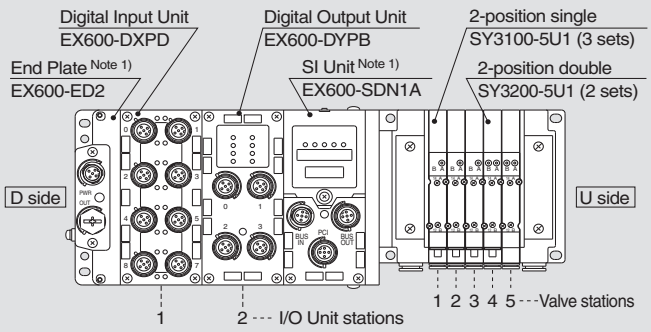

SS5Y3-10S6Q42-05B-C6 ···1 set (Type 10 5-station manifold base part no.)
∗SY3100-5U1 ·····3 sets (2-position single part no.)
∗SY3200-5U1 ·····2 sets (2-position double part no.)
∗EX600-DXPD ·····1 set I/O Unit part number (Station 1)
∗EX600-DYPB ·····1 set I/O Unit part number (Station 2)
The asterisk denotes the symbol for assembly. Prefix it to the part nos. of the valve, etc.

- The valve arrangement is numbered as the 1st station from the D side.
- Under the manifold part number, state the valves to be mounted, then the I/O Units in order from the 1st station as shown in the figure above. If the arrangement becomes complicated, specify on a manifold specification sheet.

Note 1) Do not enter the SI Unit part number and the End Plate part number together.
Note 2) When mixing top ported configurations, select from page 24. Specify on a manifold specification sheet if plugs are reguired on the A and B port on the manifold.

❼ P, E port entry, SUP/EXH block assembly

	Internal pilot	Internal pilot, Built-in silencer	External pilot
P, E port entry U side (2 to 10 stations)	U	C	G
P, E port entry D side (2 to 10 stations)	D	E	H
P, E port entry both sides (2 to 24 stations)	B	F	J

∗ 3/5 (E) port is plugged for the built-in silencer type.
∗ When the built-in silencer type is used, keep the exhaust port from coming in direct contact with water or other liquids.

Refer to the page on the right for ❽

❾ Mounting

Nil	Direct mounting	
D	DIN rail mounting (With DIN rail)	
D0	DIN rail mounting (Without DIN rail)	
D3	For 3 stations	Specify a longer rail than the standard length.
⋮	⋮	
D24	For 24 stations	

∗ Only direct mounting is available for Type 11 (Bottom ported). When it is necessary to mount a DIN rail without an SI Unit, select D0 and order the DIN rail with required length separately by referring to L3 in the dimensions. When selecting the DIN rail mounting (with DIN rail) of the SY5000 series with the End Plate to a power supply 7/8 inch connector, 9 I/O Unit stations will result in a total of 23 valve stations. With 24 stations, the DIN rail mounting (with DIN rail) cannot be indicated, so please exercise caution. (Refer to "DIN Rail Overall Length" on pages 19 to 22.)

Refer to the catalog of each series for details on manifold solenoid valve specifications, Common Precautions and Specific Product Precautions.

❽ A, B port size (Metric)

Symbol		A, B port	Type 10/ Side ported SY3000	Type 10/ Side ported SY5000	Type 11/ Bottom ported SY5000
C2	Straight	ø2 One-touch fitting	●	—	—
C3	Straight	ø3.2 One-touch fitting	●	—	—
C4	Straight	ø4 One-touch fitting	●	●	●
C6	Straight	ø6 One-touch fitting	●	●	●
C8	Straight	ø8 One-touch fitting	—	●	●
CM*	Straight	Straight port, mixed sizes	●	●	●
L4	Elbow Upward	ø4 One-touch fitting	●	●	—
L6	Elbow Upward	ø6 One-touch fitting	●	●	—
L8	Elbow Upward	ø8 One-touch fitting	—	●	—
B4	Elbow Downward	ø4 One-touch fitting	●	●	—
B6	Elbow Downward	ø6 One-touch fitting	●	●	—
B8	Elbow Downward	ø8 One-touch fitting	—	●	—
LM*	Elbow	Elbow port, mixed sizes (Including upward and downward piping)	●	●	—
P, E port size (One-touch fittings)			ø8	ø10	ø10

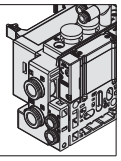

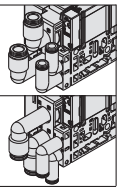

A, B port size (Inch)

Symbol		A, B port	Type 10/ Side ported SY3000	Type 10/ Side ported SY5000	Type 11/ Bottom ported SY5000
N1	Straight	ø1/8" One-touch fitting	●	—	—
N3	Straight	ø5/32" One-touch fitting	●	●	●
N7	Straight	ø1/4" One-touch fitting	●	●	●
N9	Straight	ø5/16" One-touch fitting	—	●	●
CM*	Straight	Straight port, mixed sizes	●	●	●
LN3	Elbow Upward	ø5/32" One-touch fitting	●	—	—
LN7	Elbow Upward	ø1/4" One-touch fitting	●	●	—
LN9	Elbow Upward	ø5/16" One-touch fitting	—	●	—
BN3	Elbow Downward	ø5/32" One-touch fitting	●	—	—
BN7	Elbow Downward	ø1/4" One-touch fitting	●	●	—
BN9	Elbow Downward	ø5/16" One-touch fitting	—	●	—
LM*	Elbow	Elbow port, mixed sizes (Including upward and downward piping)	●	●	—
P, E port size (One-touch fittings)			ø5/16"	ø3/8"	ø3/8"

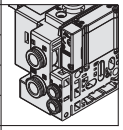

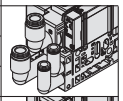

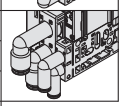

∗ Indicate the sizes on the manifold specification sheet in the case of "CM" and "LM".
∗ The direction of P, E port fittings is the same as for A, B port. If selecting "LM", indicate it on the manifold specification sheet for the P, E port fitting direction.

How to Order Valves (With two mounting screws)

SY 3 1 0 0 ☐ ☐ ☐ ☐ – 5 ☐ ☐ 1 – ☐

❶ ❷ ❸ ❹ ❺ ❻ ❼ ❽ ❾ ❿ ⓫

• Base mounted

❶ Series

3	SY3000
5	SY5000

❷ Type of actuation

1	2-position single
2	2-position double
3	3-position closed center
4	3-position exhaust center
5	3-position pressure center
A*	4-position dual 3-port valve (N.C./N.C.)
B*	4-position dual 3-port valve (N.O./N.O.)
C*	4-position dual 3-port valve (N.C./N.O.)

∗ Only rubber seal type is available for 4-position dual 3-port valves.

❸ Seal type

0	Rubber seal
1	Metal seal

❹ Pilot type

Nil	Internal pilot
R	External pilot

❺ Back pressure check valve (Built-in valve type)

Nil	None
H	Built-in

∗ Only rubber seal type.
Manifold installed type is available if the back pressure check valve is required for a valve with metal seal, Refer to the SY3000/5000 series catalog (CAT.ES11-103) for details. However, it is not recommended to use the built-in valve type and the manifold installed type at the same time because it will reduce the flow.
∗ The built-in valve type back pressure check valve is not available for the 3-position type.

❻ Pilot valve option

Nil	Standard (102 psi)
B	Quick response type (102 psi)
K*	High pressure type (145 psi)

∗ Only metal seal type is available for the high pressure type.

❼ Coil type

Nil	Standard
T	With power saving circuit (Continuous duty type)

∗ Be sure to select the power saving circuit type when the valve is continuously energized for long periods of time.
∗ The product with power saving circuit is not available for the quick response type.

❽ Rated voltage

5	24 VDC

❾ Light/surge voltage suppressor and common specification

R	With surge voltage suppressor (Non-polar)
U	With light/surge voltage suppressor (Non-polar)
S	With surge voltage suppressor (Positive common)
Z	With light/surge voltage suppressor (Positive common)
NS	With surge voltage suppressor (Negative common)
NZ	With light/surge voltage suppressor (Negative common)

∗ Only "Z" and "NZ" types are available for the product with power saving circuit. Select a valve from R, U, S or Z when the SI Unit common is positive common. Select a valve from R, U, NS or NZ when the SI Unit common is negative common.

❿ Manual override

Nil: Non-locking push type

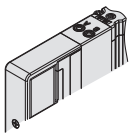

D: Push-turn locking slotted type

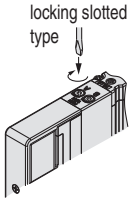

F: Slide locking type

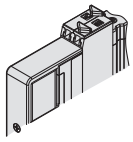

⓫ Option for mounting

Nil	With mounting screw (Round head combination screw)
B	With mounting screw (Hexagon socket head cap screw)
K	With mounting screw (Round head combination screw, falling-out-prevention type)
H	With mounting screw (Hexagon socket head cap screw, falling-out-prevention type)

∗ For "K" and "H", mounting screws do not fall out from the valve. (An apparatus to prevent falling-out is provided on the valve body cover.)
∗ When ordering a valve individually, the base gasket is not included. Since the base gasket is attached to the manifold, please order the base gasket separately if it is needed for maintenance service. Refer to the SY3000/5000 series catalog (CAT.ES11-103) for details.
∗ "B" and "H" cannot be selected for the individual SUP/EXH spacer assembly or double check spacer assembly with residual pressure release valve.

Dimensions: Type 10/For EX600 (M12 Connector)/Series SY3000

(mm)

SS5Y3-10S6□ 2/4 □-Stations U/D/B -C2/C3, N1/C4, N3/C6, N7 (D)

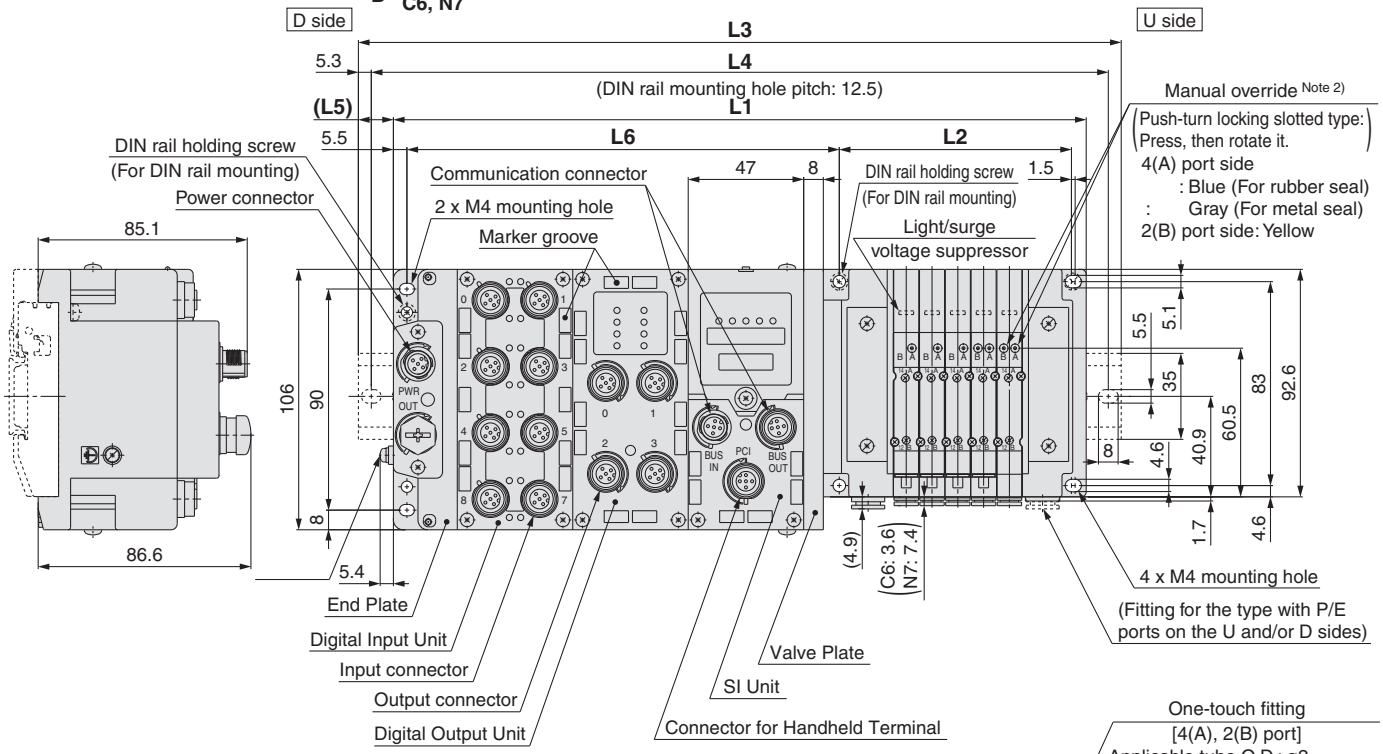

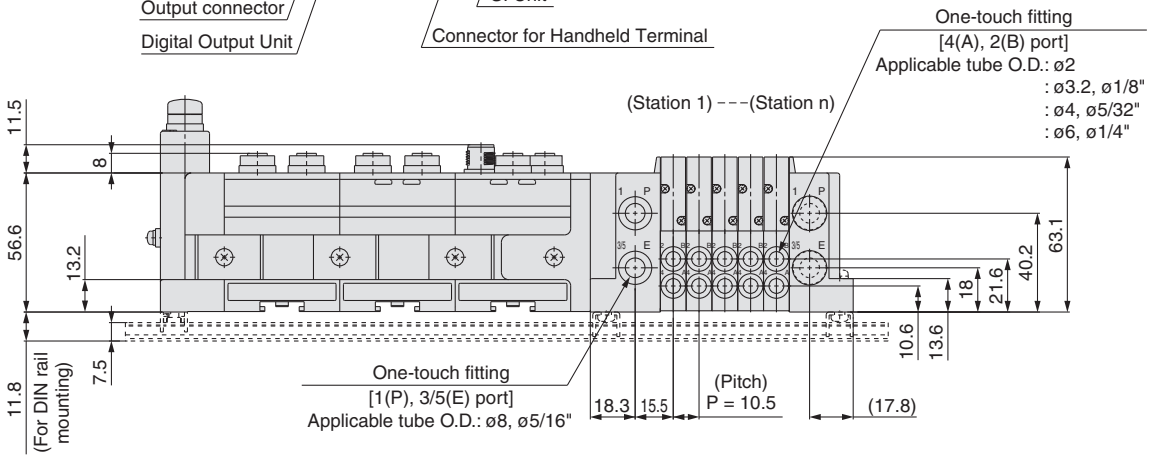

L1 = 10.5 x n1 + 135.5 + 47 x n2
L2 = 10.5 x n1 + 42
L4 = L3 – 10.5
L5 = (L3 – L1)/2
L6 = 47 x n2 + 82

Note 1) These figures show the "SS5Y3-10S6Q22-05D-C6".
Note 2) Refer to the SY3000/5000 series catalog (CAT.ES11-103) for dimensions of external pilot, silencer, elbow fittings and slide locking manual override.
Note 3) Refer to the SY3000/5000 series catalog (CAT.ES11-103) for dimensions of A or B port top-ported type.

L3: DIN Rail Overall Length

(mm)

I/O Unit stations (n2) \ Valve stations (n1)	2	3	4	5	6	7	8	9	10	11	12	13	14	15	16	17	18	19	20	21	22	23	24
0	185.5	198	210.5	223	223	235.5	248	260.5	273	285.5	285.5	298	310.5	323	335.5	348	348	360.5	373	385.5	398	410.5	423
1	235.5	248	248	260.5	273	285.5	298	310.5	323	323	335.5	348	360.5	373	385.5	385.5	398	410.5	423	435.5	448	448	460.5
2	285.5	285.5	298	310.5	323	335.5	348	348	360.5	373	385.5	398	410.5	410.5	423	435.5	448	460.5	473	485.5	485.5	498	510.5
3	323	335.5	348	360.5	373	385.5	385.5	398	410.5	423	435.5	448	448	460.5	473	485.5	498	510.5	510.5	523	535.5	548	560.5
4	373	385.5	398	410.5	410.5	423	435.5	448	460.5	473	473	485.5	498	510.5	523	535.5	548	548	560.5	573	585.5	598	610.5
5	423	435.5	448	448	460.5	473	485.5	498	510.5	510.5	523	535.5	548	560.5	573	573	585.5	598	610.5	623	635.5	635.5	648
6	473	473	485.5	498	510.5	523	535.5	535.5	548	560.5	573	585.5	598	610.5	610.5	623	635.5	648	660.5	673	673	685.5	698
7	510.5	523	535.5	548	560.5	573	573	585.5	598	610.5	623	635.5	635.5	648	660.5	673	685.5	698	698	710.5	723	735.5	748
8	560.5	573	585.5	598	598	610.5	623	635.5	648	660.5	673	673	685.5	698	710.5	723	735.5	735.5	748	760.5	773	785.5	798
9	610.5	623	635.5	635.5	648	660.5	673	685.5	698	698	710.5	723	735.5	748	760.5	760.5	773	785.5	798	810.5	823	835.5	835.5

Dimensions: Type 10/For EX600 (7/8 Inch Connector)/Series SY3000

(mm)

SS5Y3-10S6□$^{3}_{5}$□-Stations $^{U}_{D}$ ^{B} - ^{C2} $^{C3, N1}$ $^{C4, N3}$ $^{C6, N7}$ (D)

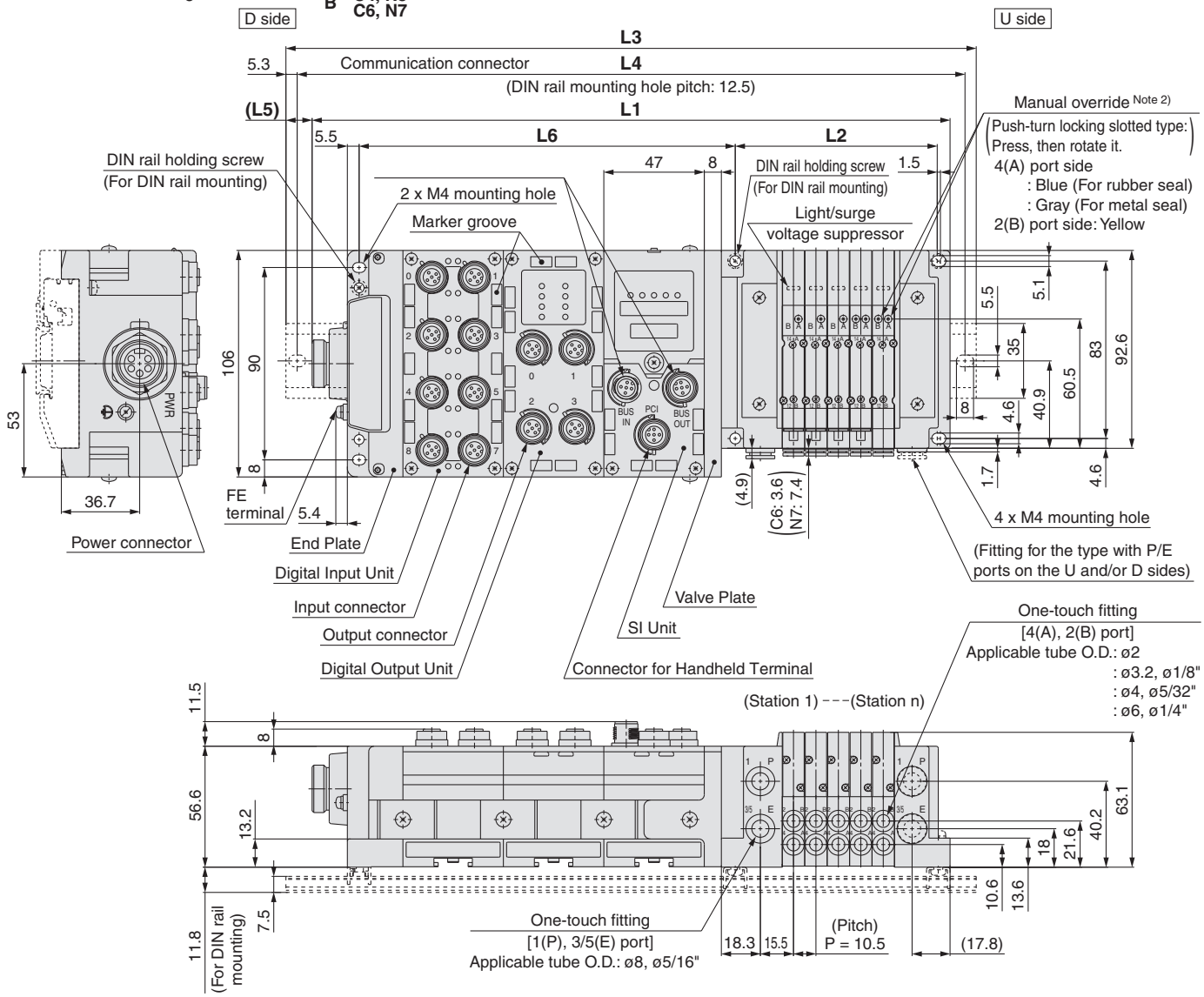

L1 = 10.5 x n1 + 152 + 47 x n2
L2 = 10.5 x n1 + 42
L4 = L3 – 10.5
L5 = (L3 – L1)/2
L6 = 47 x n2 + 82

Note 1) These figures show the "SS5Y3-10S6Q32-05D-C6".
Note 2) Refer to the SY3000/5000 series catalog (CAT.ES11-103) for dimensions of external pilot, silencer, elbow fittings and slide locking manual override.
Note 3) Refer to the SY3000/5000 series catalog (CAT.ES11-103) for dimensions of A or B port top-ported type.

L3: DIN Rail Overall Length

(mm)

I/O Unit stations (n2) \ Valve stations (n1)	2	3	4	5	6	7	8	9	10	11	12	13	14	15	16	17	18	19	20	21	22	23	24
0	198	210.5	223	235.5	248	260.5	260.5	273	285.5	298	310.5	323	323	335.5	348	360.5	373	385.5	385.5	398	410.5	423	435.5
1	248	260.5	273	285.5	285.5	298	310.5	323	335.5	348	360.5	360.5	373	385.5	398	410.5	423	423	435.5	448	460.5	473	485.5
2	298	310.5	323	323	335.5	348	360.5	373	385.5	385.5	398	410.5	423	435.5	448	448	460.5	473	485.5	498	510.5	523	523
3	348	348	360.5	373	385.5	398	410.5	423	423	435.5	448	460.5	473	485.5	485.5	498	510.5	523	535.5	548	548	560.5	573
4	385.5	398	410.5	423	435.5	448	448	460.5	473	485.5	498	510.5	510.5	523	535.5	548	560.5	573	585.5	585.5	598	610.5	623
5	435.5	448	460.5	473	485.5	485.5	498	510.5	523	535.5	548	548	560.5	573	585.5	598	610.5	610.5	623	635.5	648	660.5	673
6	485.5	498	510.5	510.5	523	535.5	548	560.5	573	573	585.5	598	610.5	623	635.5	648	648	660.5	673	685.5	698	710.5	710.5
7	535.5	548	548	560.5	573	585.5	598	610.5	610.5	623	635.5	648	660.5	673	673	685.5	698	710.5	723	735.5	735.5	748	760.5
8	573	585.5	598	610.5	623	635.5	635.5	648	660.5	673	685.5	698	710.5	710.5	723	735.5	748	760.5	773	773	785.5	798	810.5
9	623	635.5	648	660.5	673	673	685.5	698	710.5	723	735.5	735.5	748	760.5	773	785.5	798	798	810.5	823	835.5	848	860.5

Dimensions: Type 10/For EX600 (M12 Connector)/Series SY5000

(mm)

SS5Y5-10S6□ 2/4 □- Stations U C4, N3 / D - C6, N7 / B C8, N9 (D)

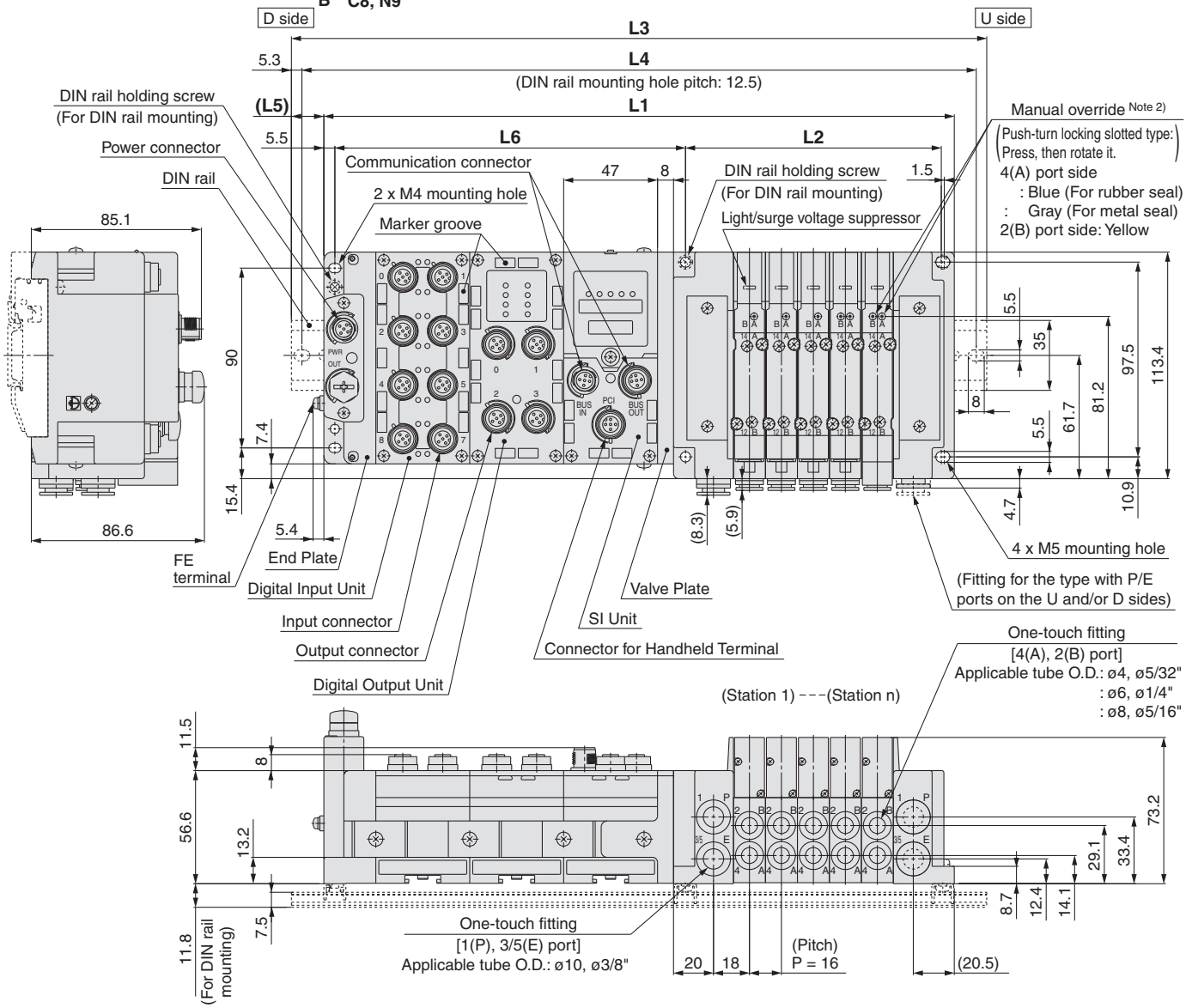

L1 = 16 x n1 + 141.5 + 47 x n2
L2 = 16 x n1 + 48
L4 = L3 – 10.5
L5 = (L3 – L1)/2
L6 = 47 x n2 + 81.5

Note 1) These figures show the "SS5Y5-10S6Q22-05D-C8".
Note 2) Refer to the SY3000/5000 series catalog (CAT.ES11-103) for dimensions of external pilot, silencer, elbow fittings and slide locking manual override.
Note 3) Refer to the SY3000/5000 series catalog (CAT.ES11-103) for dimensions of A or B port top-ported type.

L3: DIN Rail Overall Length

(mm)

I/O Unit stations (n2) \ Valve stations (n1)	2	3	4	5	6	7	8	9	10	11	12	13	14	15	16	17	18	19	20	21	22	23	24
0	198	223	235.5	248	273	285.5	298	310.5	335.5	348	360.5	373	398	410.5	423	448	460.5	473	485.5	510.5	523	535.5	560.5
1	248	260.5	285.5	298	310.5	335.5	348	360.5	373	398	410.5	423	448	460.5	473	485.5	510.5	523	535.5	548	573	585.5	598
2	298	310.5	323	348	360.5	373	398	410.5	423	435.5	460.5	473	485.5	510.5	523	535.5	548	573	585.5	598	623	635.5	648
3	348	360.5	373	398	410.5	423	435.5	460.5	473	485.5	498	523	535.5	548	573	585.5	598	610.5	635.5	648	660.5	685.5	698
4	385.5	410.5	423	435.5	460.5	473	485.5	498	523	535.5	548	573	585.5	598	610.5	635.5	648	660.5	673	698	710.5	723	748
5	435.5	448	473	485.5	498	523	535.5	548	560.5	585.5	598	610.5	635.5	648	660.5	673	698	710.5	723	748	760.5	773	785.5
6	485.5	498	523	535.5	548	560.5	585.5	598	610.5	623	648	660.5	673	698	710.5	723	735.5	760.5	773	785.5	810.5	823	835.5
7	535.5	548	560.5	585.5	598	610.5	623	648	660.5	673	698	710.5	723	735.5	760.5	773	785.5	798	823	835.5	848	873	885.5
8	573	598	610.5	623	648	660.5	673	685.5	710.5	723	735.5	760.5	773	785.5	798	823	835.5	848	873	885.5	898	910.5	935.5
9	623	648	660.5	673	685.5	710.5	723	735.5	748	773	785.5	798	823	835.5	848	860.5	885.5	898	910.5	935.5	948	960.5	973

Dimensions: Type 10/For EX600 (7/8 Inch Connector)/Series SY5000

(mm)

SS5Y5-10S6□ 3/5 □- Stations U/D/B - C4, N3/C6, N7/C8, N9 (D)

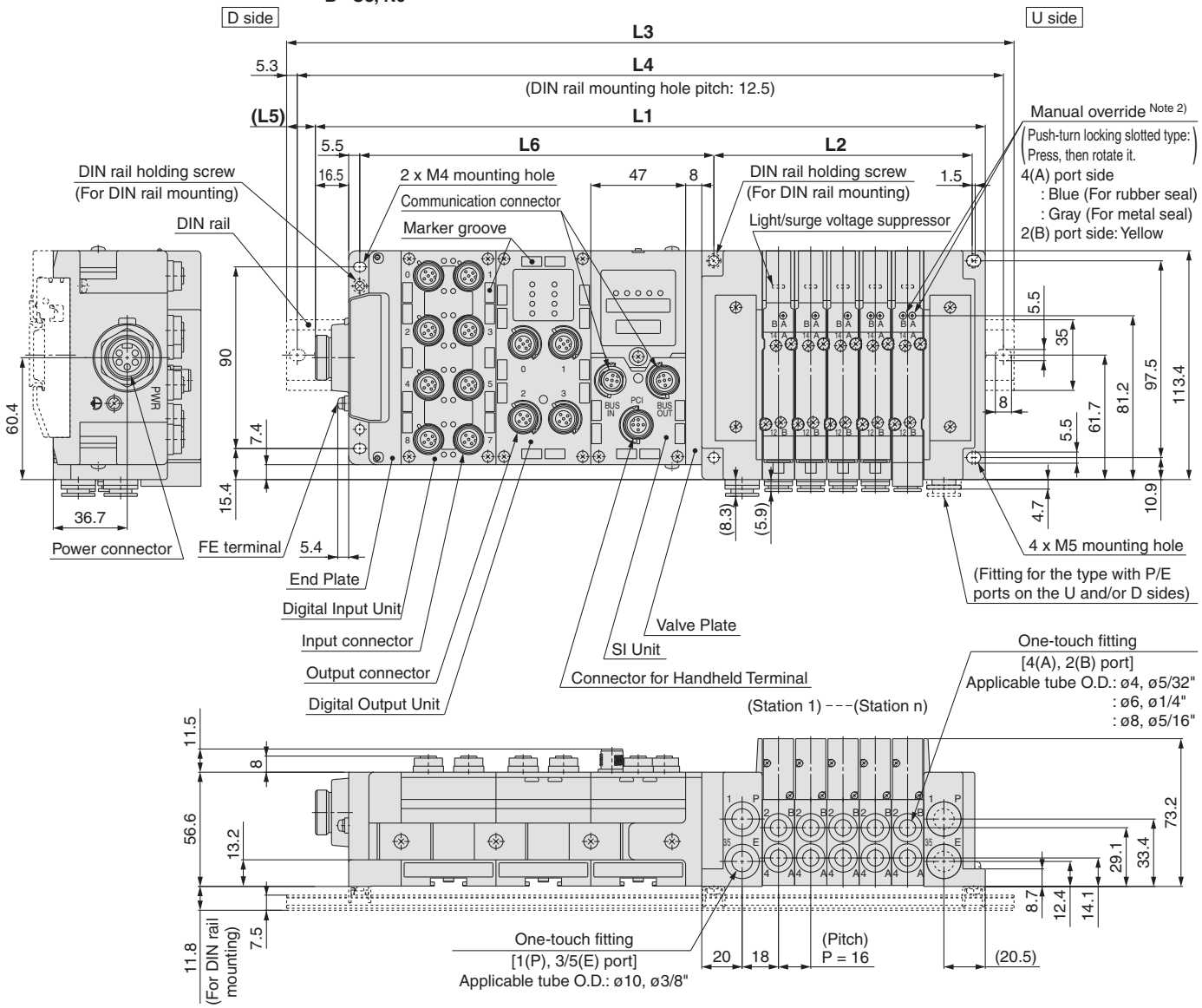

L1 = 16 x n1 + 158 + 47 x n2
L2 = 16 x n1 + 48
L4 = L3 – 10.5
L5 = (L3 – L1)/2
L6 = 47 x n2 + 81.5

Note 1) These figures show the "SS5Y5-10S6Q32-05D-C8".
Note 2) Refer to the SY3000/5000 series catalog (CAT.ES11-103) for dimensions of external pilot, silencer, elbow fittings and slide locking manual override.
Note 3) Refer to the SY3000/5000 series catalog (CAT.ES11-103) for dimensions of A or B port top-ported type.

L3: DIN Rail Overall Length

(mm)

I/O Unit stations (n2) \ Valve stations (n1)	2	3	4	5	6	7	8	9	10	11	12	13	14	15	16	17	18	19	20	21	22	23	24
0	223	235.5	248	273	285.5	298	310.5	335.5	348	360.5	385.5	398	410.5	423	448	460.5	473	485.5	510.5	523	535.5	560.5	573
1	260.5	285.5	298	310.5	335.5	348	360.5	373	398	410.5	423	448	460.5	473	485.5	510.5	523	535.5	560.5	573	585.5	598	623
2	310.5	335.5	348	360.5	373	398	410.5	423	435.5	460.5	473	485.5	510.5	523	535.5	548	573	585.5	598	623	635.5	648	660.5
3	360.5	373	398	410.5	423	435.5	460.5	473	485.5	510.5	523	535.5	548	573	585.5	598	610.5	635.5	648	660.5	685.5	698	710.5
4	410.5	423	435.5	460.5	473	485.5	498	523	535.5	548	573	585.5	598	610.5	635.5	648	660.5	685.5	698	710.5	723	748	760.5
5	460.5	473	485.5	498	523	535.5	548	560.5	585.5	598	610.5	635.5	648	660.5	673	698	710.5	723	748	760.5	773	785.5	810.5
6	498	523	535.5	548	560.5	585.5	598	610.5	635.5	648	660.5	673	698	710.5	723	735.5	760.5	773	785.5	810.5	823	835.5	848
7	548	560.5	585.5	598	610.5	623	648	660.5	673	698	710.5	723	735.5	760.5	773	785.5	810.5	823	835.5	848	873	885.5	898
8	598	610.5	623	648	660.5	673	685.5	710.5	723	735.5	760.5	773	785.5	798	823	835.5	848	873	885.5	898	910.5	935.5	948
9	648	660.5	673	685.5	710.5	723	735.5	760.5	773	785.5	798	823	835.5	848	860.5	885.5	898	910.5	935.5	948	960.5	973	—

Type 12
Top Ported

For Series EX600
Plug-in Connector Connecting Base
Series SY3000/5000

How to Order Manifold

Refer to the SY3000/5000 series catalog (CAT.ES11-103) for Type 12/Top ported dimensions.

SS5Y 3 – 12S6 Q □ 2 – 05 U – □ □

❶ ❷ ❸ ❹ ❺ ❻ ❼ ❽

❶ Series

3	SY3000
5	SY5000

∗ For mixed mounting of the SY3000/5000 series, refer to "How to Order Manifold" (for plug-in mixed mounting) in the SY series catalog.

❷ SI Unit

0	Without SI Unit
Q	For DeviceNet™
N	For PROFIBUS DP
V	For CC-Link
ZE	For EtherNet/IP™
D	For EtherCAT

Note 1) I/O Unit cannot be mounted without SI Unit.
Note 2) Valve Plate which connects manifold and SI Unit is not mounted to a valve without SI Unit. Refer to page 51 for mounting method.

❸ SI Unit common, End Plate type

SI Unit common	Power supply with M12 connector	Power supply with 7/8 inch connector
Without SI Unit	Nil	
SI Unit Positive common	2	3
SI Unit Negative common	4	5

Note) Without SI Unit, the symbol is nil.

❹ I/O Unit stations

Nil	None
1	1 station
⋮	⋮
9	9 stations

Note 1) Without SI Unit, the symbol is nil.
Note 2) SI Unit is not included in I/O Unit stations.
Note 3) When I/O Unit is selected, it is shipped separately, and assembled by customer. Refer to the attached operation manual for mounting method.
Note 4) Refer to page 50 for details on enclosure.

❺ Valve stations

Symbol	Stations	Note
02	2 stations	Double wiring Note 1)
⋮	⋮	
16	16 stations	
02	2 stations	Specified layout Note 2) (Available up to 32 solenoids)
⋮	⋮	
24	24 stations	

Note 1) Double wiring: 2-position single, double, 3-position and 4-position valves can be used on all manifold stations.
Use of a 2-position single solenoid will result in an unused control signal. If this is not desired, order with a specified layout.
Note 2) Specified layout: Indicate the wiring specifications on the manifold specification sheet. (Note that 2-position double, 3-position and 4-position valves cannot be used where single wiring has been specified.)
Note 3) This also includes the number of blanking plate assembly.

❻ P, E port entry, SUP/EXH block assembly

	Internal pilot	Internal pilot, Built-in silencer	External pilot
P, E port entry U side (2 to 10 stations)	U	C Note)	G
P, E port entry D side (2 to 10 stations)	D	E Note)	H
P, E port entry both sides (2 to 24 stations)	B	—	J

∗ For built-in silencer type, P and E ports are available on the U and D sides. 3/5(E) port is plugged. The silencer discharge port is located on the opposite side of P, E port entry. (Example: When the P, E port entry is D side, the silencer discharge port is U side.)
∗ When the built-in silencer type is used, keep the exhaust port from coming in direct contact with water or other liquids.
Note) When ordering the SUP/EXH block assembly with the built-in silencer, the P port will be located on either the U or D side.

❼ P, E port size (One-touch fittings)

Symbol	SY3000	SY5000
Nil	ø8	ø10
N	ø5/16"	ø3/8"

∗ For N, sizes are in inches.

❽ Mounting

Nil	Direct mounting
D	DIN rail mounting (With DIN rail)
D0	DIN rail mounting (Without DIN rail)
D3	For 3 stations — Specify a longer rail than the standard length.
⋮	⋮
D24	For 24 stations

∗ When it is necessary to mount a DIN rail without an SI unit, select D0 and order the DIN rail with required length separately by referring to L3 in the dimensions. When selecting the DIN rail mounting (with DIN rail) of the SY5000 series with the End Plate to a power supply 7/8 inch connector, 9 I/O Unit stations will result in a total of 23 valve stations. With 24 stations, the DIN rail mounting (with DIN rail) cannot be indicated, so please exercise caution. (Refer to "DIN Rail Overall Length" on pages 19 to 22.)

How to Order Manifold Assembly

Example (SS5Y3-12S6□-□)

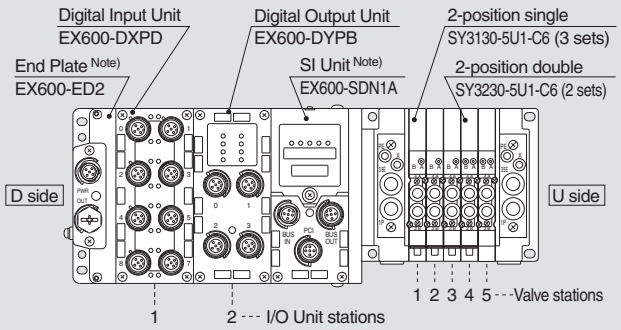

SS5Y3-12S6Q42-05B ·····1 set (Type 12 5-station manifold base part no.)
∗SY3130-5U1-C6 ·····3 sets (2-position single part no.)
∗SY3230-5U1-C6 ·····2 sets (2-position double part no.)
∗EX600-DXPD ·····1 set I/O Unit part number (Station 1)
∗EX600-DYPB ·····1 set I/O Unit part number (Station 2)
The asterisk denotes the symbol for assembly. Prefix it to the part nos. of the valve, etc.

- The valve arrangement is numbered as the 1st station from the D side.
- Under the manifold part number, state the valves to be mounted, then the I/O Units in order from the 1st station as shown in the figure above. If the arrangement becomes complicated, specify on a manifold specification sheet.

Note) Do not enter the SI Unit part number and the End Plate part number together.

Refer to the catalog of each series for details on manifold solenoid valve specifications, Common Precautions and Specific Product Precautions.

How rder Valves (With two mounting screws)

SY 3 1 3 0 □ □ □ □ – 5 □ □ 1 – C6 □ – □

❶ ❷ ❸ ❹ ❺ ❻ ❼ ❽ ❾ ❿ ⓫ ⓬ ⓭

• Top mounted

❶ Series

3	SY3000
5	SY5000

❷ Type of actuation

1	2-position single
2	2-position double
3	3-position closed center
4	3-position exhaust center
5	3-position pressure center
A*	4-position dual 3-port valve (N.C./N.C.)
B*	4-position dual 3-port valve (N.O./N.O.)
C*	4-position dual 3-port valve (N.C./N.O.)

* Only rubber seal type is available for 4-position dual 3-port valves.

❸ Seal type

0	Rubber seal
1	Metal seal

❹ Pilot type

Nil	Internal pilot
R	External pilot

❺ Back pressure check valve

Nil	None
H	Built-in

* Only rubber seal type. Manifold installed type is available if the back pressure check valve is required for a valve with metal seal. Refer to the SY3000/5000 series catalog (CAT.ES11-103) for details. However, it is not recommended to use the built-in valve type and the manifold installed type at the same time because it will reduce the flow.
* The built-in valve type back pressure check valve is not available for the 3-position type.

❻ Pilot valve option

Nil	Standard (102 psi)
B	Quick response type (102 psi)
K*	High pressure type (145 psi)

* Only metal seal type is available for the high pressure type.

❼ Coil type

Nil	Standard
T	With power saving circuit (Continuous duty type)

* Be sure to select the power saving circuit type when the valve is continuously energized for long periods of time.
* The product with power saving circuit is not available for the quick response type.

❽ Rated voltage

5	24 VDC

❾ Light/surge voltage suppressor and common specification

R	With surge voltage suppressor (Non-polar)
U	With light/surge voltage suppressor (Non-polar)
S	With surge voltage suppressor (Positive common)
Z	With light/surge voltage suppressor (Positive common)
NS	With surge voltage suppressor (Negative common)
NZ	With light/surge voltage suppressor (Negative common)

* Only "Z" and "NZ" types are available for the product with power saving circuit. Select a valve from R, U, S or Z when the SI Unit common is positive common. Select a valve from R, U, NS or NZ when the SI Unit common is negative common.

❿ Manual override

Nil: Non-locking push type	D: Push-turn locking slotted type	F: Slide locking type
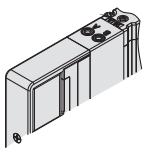	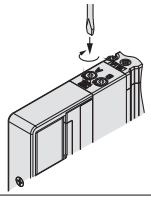	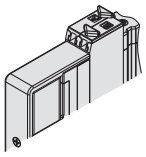

⓫ A, B port size

Thread piping

Symbol	Port size	Applicable series
M5	M5 x 0.8	SY3000
01	1/8	SY5000

One-touch fitting (Metric)

Symbol	A, B port	SY3000	SY5000
C2	ø2 One-touch fitting	●	—
C3	ø3.2 One-touch fitting	●	—
C4	ø4 One-touch fitting	●	●
C6	ø6 One-touch fitting	●	●
C8	ø8 One-touch fitting	—	●

One-touch fitting (Inch)

Symbol	A, B port	SY3000	SY5000
N1	ø1/8" One-touch fitting	●	—
N3	ø5/32" One-touch fitting	●	●
N7	ø1/4" One-touch fitting	●	●
N9	ø5/16" One-touch fitting	—	●

⓬ Thread type

Nil	Rc
F	G
N	NPT
T	NPTF

* Only Nil is available for M5.

⓭ Option for mounting

Nil	With mounting screw (Round head combination screw)
B	With mounting screw (Hexagon socket head cap screw)
K	With mounting screw (Round head combination screw, falling-out-prevention type)
H	With mounting screw (Hexagon socket head cap screw, falling-out-prevention type)

* For "K" and "H", mounting screws do not fall out from the valve. (An apparatus to prevent falling-out is provided on the valve port block.)
* When ordering a valve individually, the base gasket is not included. Since the base gasket is attached to the manifold, please order the base gasket separately if it is needed for maintenance service. Refer to the SY3000/5000 series catalog (CAT.ES11-103) for details.
* "B" and "H" cannot be selected for the individual SUP/EXH spacer assembly.

For Series EX600

Series SV1000/2000/3000

When I/O Unit EX600-D□□E or EX600-D□□F are selected, enclosure is IP40.
Refer to page 50 for details.

How rder Manifold

● Tie-rod Base

SS5V 1 – □ 10S6 Q □ □ □ D – 05 U □ – C6 – □

Series

1	SV1000
2	SV2000
3	SV3000

Enclosure

Nil	IP40
W	IP67

SI Unit

0	Without SI Unit
Q	For DeviceNet™
N	For PROFIBUS DP
V	For CC-Link
ZE	For EtherNet/IP™
D	For EtherCAT

- When "Without SI Unit" is specified, I/O Unit cannot be mounted.
- When "Without SI Unit" is specified, Valve Plate to connect the valve manifold and SI Unit is not mounted. Refer to page 51 for mounting method.

End Plate type

Nil	No End Plate
2	Power supply with M12 connector (Max. supplied current 2 A)
3	Power supply with 7/8 inch connector (Max. supplied current 8 A)

Note) Without SI Unit, the symbol is nil.

SI Unit common

Nil	Positive common
N	Negative common

Note) Without SI Unit, the symbol is nil.

I/O Unit stations

Nil	None
1	1 station
⋮	⋮
9	9 stations

Note 1) Without SI Unit, the symbol is nil.
Note 2) SI Unit is not included in I/O Unit stations.
Note 3) When I/O Unit is selected, it is shipped separately and assembled by customer. Refer to the attached operation manual for mounting method.

Valve stations

Symbol	Stations	Note
02	2 stations	Double wiring Note 1)
⋮	⋮	
16	16 stations	
02	2 stations	Specified layout Note 2) (Available up to 32 solenoids)
⋮	⋮	
20	20 stations	

Note 1) Double wiring: single, double, 3-position and 4-position valves can be used on all manifold stations.
Use of a single solenoid will result in an unused control signal. If this is not desired, order with a specified layout.
Note 2) Specified layout: Indicate the wiring specifications on the manifold specification sheet. (Note that double, 3-position and 4-position valves cannot be used where single wiring has been specified.)

Mounting

Nil	Direct mounting	
D	DIN rail mounting (With DIN rail)	
D0 Note 1)	DIN rail mounting (Without DIN rail)	
D3	For 3 stations	When a longer DIN rail is desired than the specified stations. (Specify a longer rail than the standard length.)
⋮	⋮	
D20	For 20 stations	

Note 1) In the case of D0, only DIN rail mounting bracket is attached.
Note 2) DIN rail is not attached (but shipped together) on the manifold in the case of with DIN rail. Refer to the SV series catalog for mounting method.
Note 3) When selecting the DIN rail mounting (with DIN rail) of the SV3000 series, and 9 I/O Unit stations will result in a total of 18 valve stations. With 19 and 20 stations, the DIN rail mounting (with DIN rail) cannot be indicated, so please exercise caution. (Refer to "DIN Rail Overall Length" on page 31 and 32.)
Note 4) Please consult SMC when changing from direct mounting to DIN rail mounting.
Note 5) When it is necessary to mount a DIN rail without an SI Unit, select D0 and order the DIN rail with required length separately by referring to L1 in the dimensions.

SUP/EXH block assembly

Nil	Internal pilot
S Note)	Internal pilot, Built-in silencer
R	External pilot
RS Note)	External pilot, Built-in silencer

Note) When the built-in silencer type is used, keep the exhaust port from coming in direct contact with water or other liquids.

P, E port entry

U	U side (2 to 10 stations)
D	D side (2 to 10 stations)
B	Both sides (2 to 20 stations)

A, B port size (Metric)

Symbol	A, B port	P, E port	Applicable series
C3	ø3.2 One-touch fitting	ø8 One-touch fitting	SV1000
C4	ø4 One-touch fitting		
C6	ø6 One-touch fitting		
C4	ø4 One-touch fitting	ø10 One-touch fitting	SV2000
C6	ø6 One-touch fitting		
C8	ø8 One-touch fitting		
C6	ø6 One-touch fitting	ø12 One-touch fitting	SV3000
C8	ø8 One-touch fitting		
C10	ø10 One-touch fitting		
M	A, B port mixed		

A, B port size (Inch)

Symbol	A, B port	P, E port	Applicable series
N1	ø1/8" One-touch fitting	ø5/16" One-touch fitting	SV1000
N3	ø5/32" One-touch fitting		
N7	ø1/4" One-touch fitting		
N3	ø5/32" One-touch fitting	ø3/8" One-touch fitting	SV2000
N7	ø1/4" One-touch fitting		
N9	ø5/16" One-touch fitting		
N7	ø1/4" One-touch fitting	ø3/8" One-touch fitting	SV3000
N9	ø5/16" One-touch fitting		
N11	ø3/8" One-touch fitting		
M	A, B port mixed		

∗ In the case of mixed specifications (M), indicate separately on the manifold specification sheet.
∗ The X and PE port size of External pilot type (R), and X port size of External pilot, Built-in silencer type (RS) are ø4 (mm) or ø5/32" (inch) for the SV1000/2000 series, and ø6 (mm) or ø1/4" (inch) for the SV3000 series.

How to Order Manifold Assembly

Example (SS5V1)

Manifold
Power supply with
M12 connector

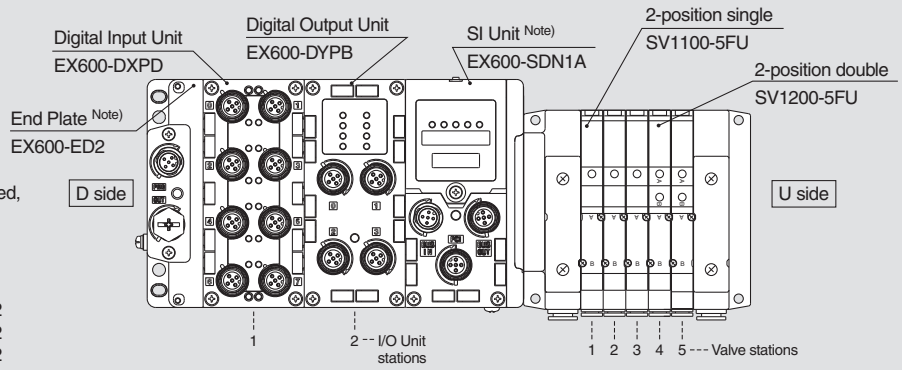

For the I/O Unit part number mounted, refer to the following pages.

- Digital Input Unit ·····P.1
- Digital Output Unit ·····P.1
- Digital Input/Output Unit ·····P.1
- Analog Input Unit ·····P.2
- Analog Output Unit ·····P.2
- Analog Input/Output Unit ·····P.2

Serial transmission kit

SS5V1-W10S6Q2N2D-05B-C6	**····1 set**	**Manifold base part number**
∗ **SV1100-5FU**	**·····3 sets**	**Valve part number (Stations 1 to 3)**
∗ **SV1200-5FU**	**·····2 sets**	**Valve part number (Stations 4 to 5)**
∗ **EX600-DXPD**	**·····1 set**	**I/O Unit part number (Station 1)**
∗ **EX600-DYPB**	**·····1 set**	**I/O Unit part number (Station 2)**

→The asterisk denotes the symbol for assembly. Prefix it to the part nos. of the solenoid valve, etc.

Enter in order starting from the first station on the D side. If the arrangement becomes complicated, specify on a manifold specification sheet.

Enter in order starting from the first station on the D side. If the arrangement becomes complicated, specify on a manifold specification sheet.

Note) Do not enter the SI Unit part number and the End Plate part number together.

How to Order Valves

SV 1 1 00 □ □ – 5 F U □ – □

Series

1	SV1000
2	SV2000
3	SV3000

Type of actuation

1	2-position single
2	2-position double
3	3-position closed center
4	3-position exhaust center
5	3-position pressure center
A	4-position dual 3-port valve (N.C./N.C.)
B	4-position dual 3-port valve (N.O./N.O.)
C	4-position dual 3-port valve (N.C./N.O.)

∗ 4-position dual 3-port valves are applicable to the SV1000/2000 series only.

Pilot type

Nil	Internal pilot
R	External pilot

∗ External pilot specification is not available for 4-position dual 3-port valves.

Back pressure check valve

Nil	None
K	Built-in

∗ The built-in back pressure check valve type is applicable to the SV1000 series only.

∗ The product with back pressure check valve is not available for 3-position valves.

Rated voltage

5	24 VDC

Light/surge voltage suppressor

U	With light/surge voltage suppressor
R	With surge voltage suppressor

Manual override

Nil: Non-locking push type	**D**: Push-turn locking slotted type

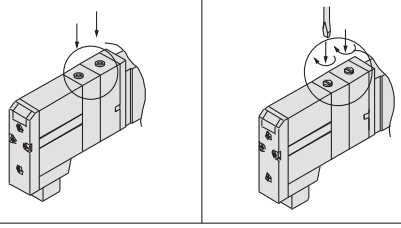

Made to Order

Nil	—
X90	Fluororubber specification

Refer to the catalog of each series for details on manifold solenoid valve specifications, Common Precautions and Specific Product Precautions.

Dimensions: Series SV1000

(mm)

Power supply with M12 connector

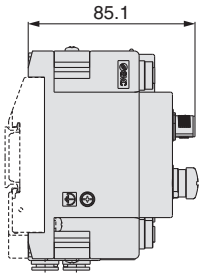

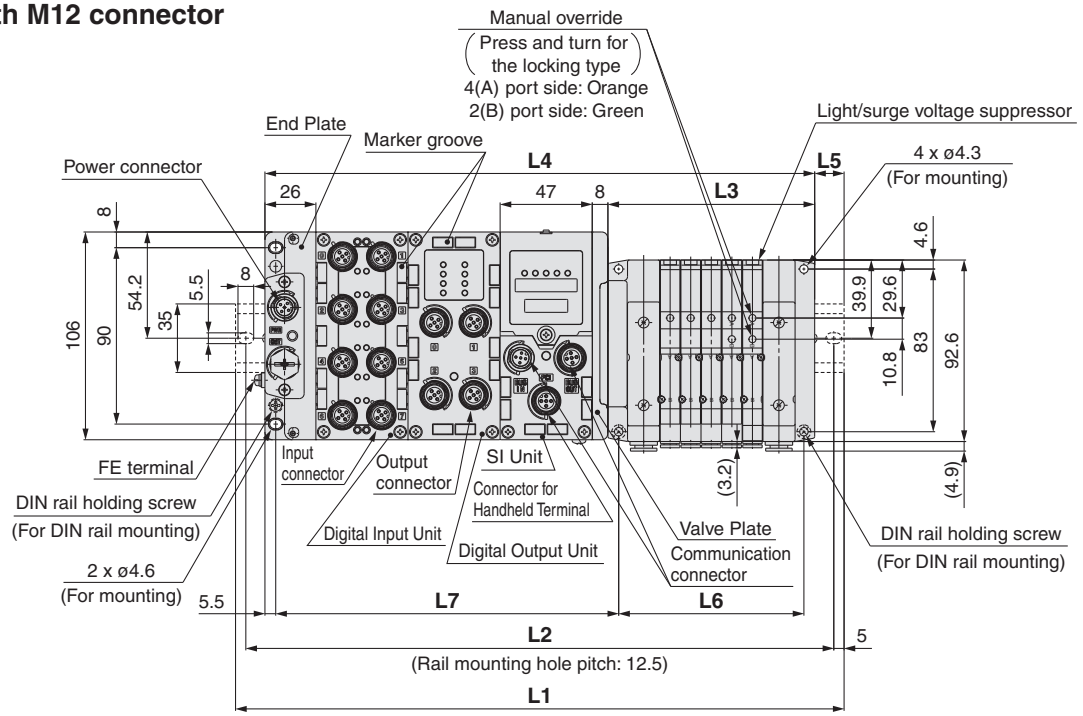

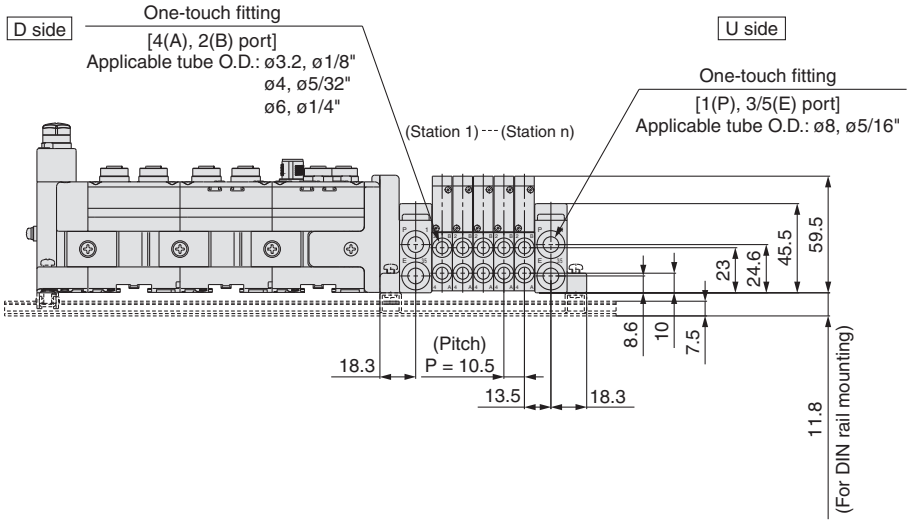

L2 = L1 – 10.5
L3 = 10.5 x n1 + 53
L4 = L3 + 81 + 47 x n2
L5 = (L1 – L4)/2
L6 = 10.5 x n1 + 42
L7 = 47 x n2 + 81

L1: DIN Rail Overall Length

(mm)

I/O Unit stations (n2) \ Valve stations (n1)	2	3	4	5	6	7	8	9	10	11	12	13	14	15	16	17	18	19	20
0	185.5	198	210.5	210.5	223	235.5	248	260.5	273	273	285.5	298	310.5	323	335.5	348	348	360.5	373
1	235.5	248	248	260.5	273	285.5	298	310.5	310.5	323	335.5	348	360.5	373	373	385.5	398	410.5	423
2	273	285.5	298	310.5	323	335.5	335.5	348	360.5	373	385.5	398	410.5	410.5	423	435.5	448	460.5	473
3	323	335.5	348	360.5	373	373	385.5	398	410.5	423	435.5	435.5	448	460.5	473	485.5	498	498	510.5
4	373	385.5	398	398	410.5	423	435.5	448	460.5	473	473	485.5	498	510.5	523	535.5	535.5	548	560.5
5	423	435.5	435.5	448	460.5	473	485.5	498	498	510.5	523	535.5	548	560.5	560.5	573	585.5	598	610.5
6	460.5	473	485.5	498	510.5	523	535.5	535.5	548	560.5	573	585.5	598	598	610.5	623	635.5	648	660.5
7	510.5	523	535.5	548	560.5	560.5	573	585.5	598	610.5	623	623	635.5	648	660.5	673	685.5	698	698
8	560.5	573	585.5	598	598	610.5	623	635.5	648	660.5	660.5	673	685.5	698	710.5	723	723	735.5	748
9	610.5	623	623	635.5	648	660.5	673	685.5	685.5	698	710.5	723	735.5	748	760.5	760.5	773	785.5	798

Dimensions: Series SV1000

(mm)

Power supply with 7/8 inch connector

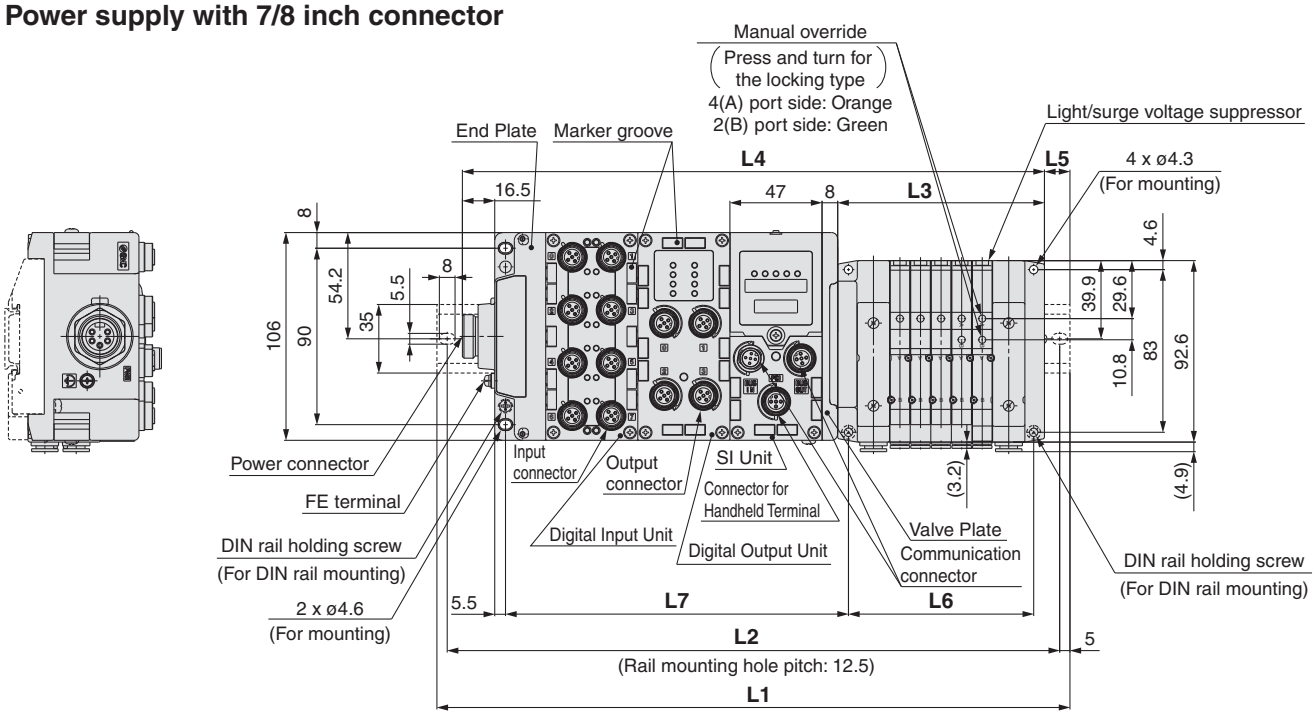

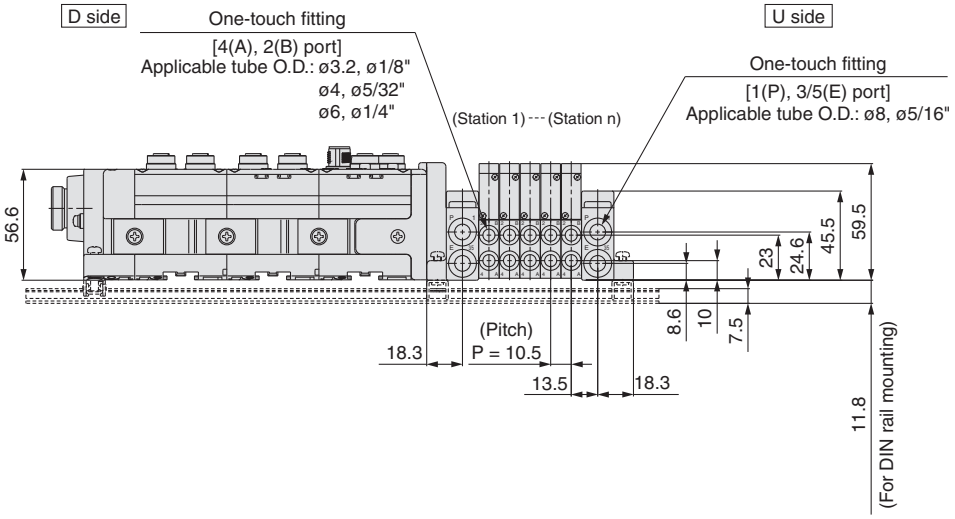

L2 = L1 – 10.5
L3 = 10.5 x n1 + 53
L4 = L3 + 97.5 + 47 x n2
L5 = (L1 – L4)/2
L6 = 10.5 x n1 + 42
L7 = 47 x n2 + 81

L1: DIN Rail Overall Length

(mm)

I/O Unit stations (n2) \ Valve stations (n1)	2	3	4	5	6	7	8	9	10	11	12	13	14	15	16	17	18	19	20
0	198	210.5	223	235.5	248	248	260.5	273	285.5	298	310.5	310.5	323	335.5	348	360.5	373	385.5	385.5
1	248	260.5	273	285.5	285.5	298	310.5	323	335.5	348	348	360.5	373	385.5	398	410.5	410.5	423	435.5
2	298	310.5	310.5	323	335.5	348	360.5	373	373	385.5	398	410.5	423	435.5	448	448	460.5	473	485.5
3	348	348	360.5	373	385.5	398	410.5	410.5	423	435.5	448	460.5	473	473	485.5	498	510.5	523	535.5
4	385.5	398	410.5	423	435.5	435.5	448	460.5	473	485.5	498	510.5	510.5	523	535.5	548	560.5	573	573
5	435.5	448	460.5	473	473	485.5	498	510.5	523	535.5	535.5	548	560.5	573	585.5	598	598	610.5	623
6	485.5	498	498	510.5	523	535.5	548	560.5	573	573	585.5	598	610.5	623	635.5	635.5	648	660.5	673
7	535.5	535.5	548	560.5	573	585.5	598	598	610.5	623	635.5	648	660.5	660.5	673	685.5	698	710.5	723
8	573	585.5	598	610.5	623	635.5	635.5	648	660.5	673	685.5	698	698	710.5	723	735.5	748	760.5	760.5
9	623	635.5	648	660.5	660.5	673	685.5	698	710.5	723	723	735.5	748	760.5	773	785.5	798	798	810.5

Dimensions: Series SV2000

(mm)

Power supply with M12 connector

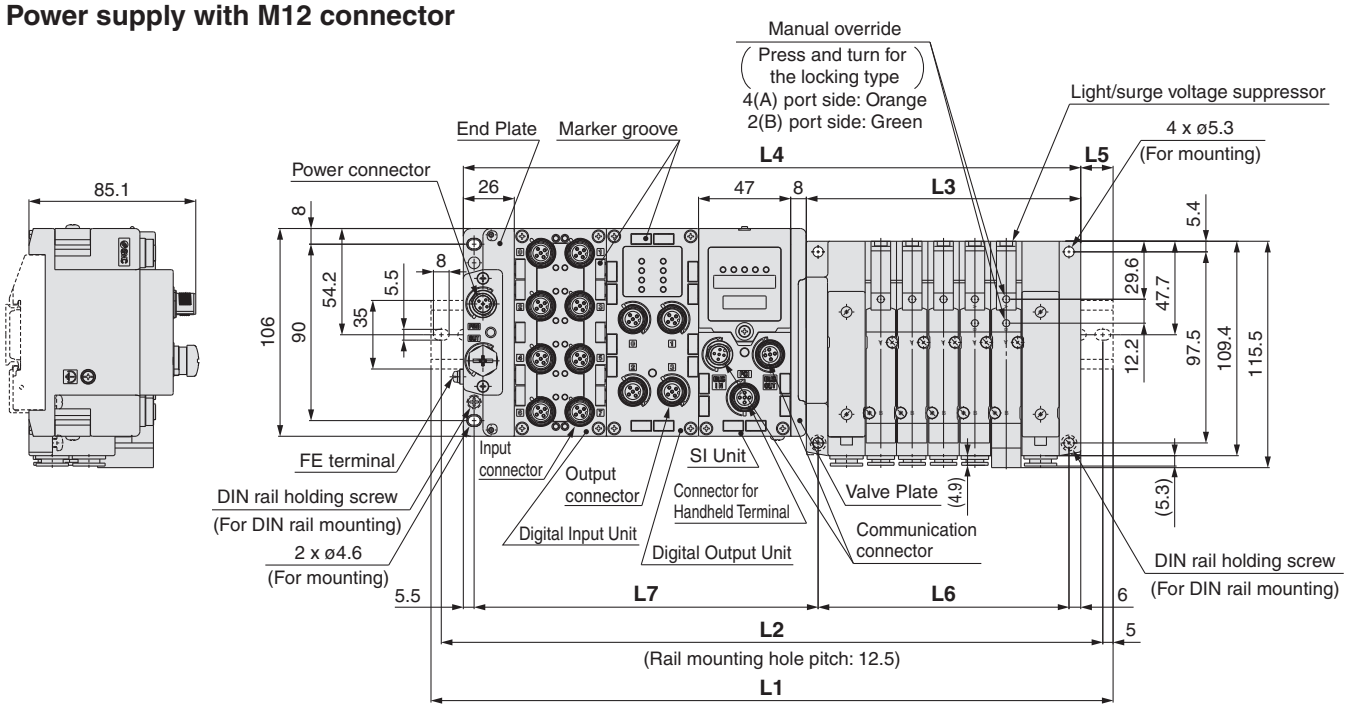

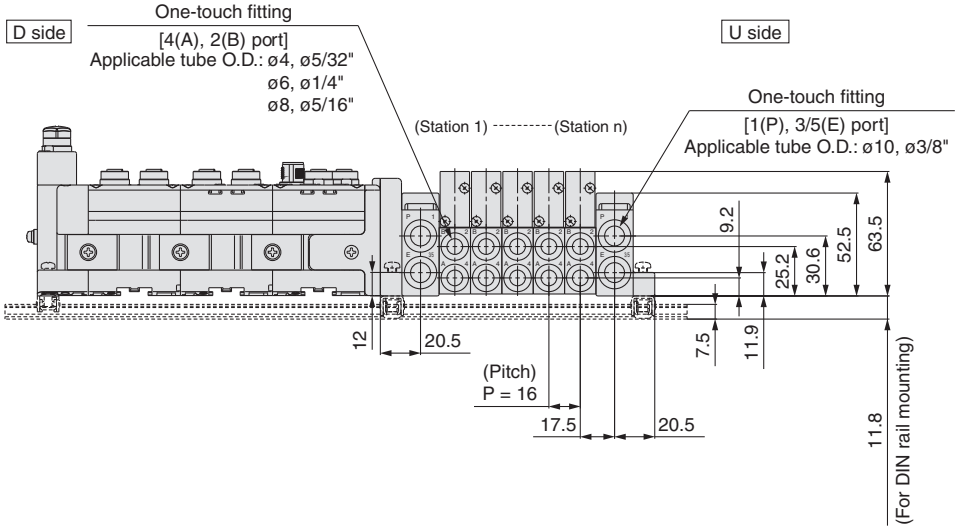

L2 = L1 – 10.5
L3 = 16 x n1 + 60
L4 = L3 + 81 + 47 x n2
L5 = (L1 – L4)/2
L6 = 16 x n1 + 48
L7 = 47 x n2 + 81.5

L1: DIN Rail Overall Length

(mm)

I/O Unit stations (n2) \ Valve stations (n1)	2	3	4	5	6	7	8	9	10	11	12	13	14	15	16	17	18	19	20
0	198	223	235.5	248	260.5	285.5	298	310.5	335.5	348	360.5	373	398	410.5	423	448	460.5	473	485.5
1	248	260.5	285.5	298	310.5	335.5	348	360.5	373	398	410.5	423	435.5	460.5	473	485.5	510.5	523	535.5
2	298	310.5	323	348	360.5	373	398	410.5	423	435.5	460.5	473	485.5	510.5	523	535.5	548	573	585.5
3	348	360.5	373	385.5	410.5	423	435.5	460.5	473	485.5	498	523	535.5	548	573	585.5	598	610.5	635.5
4	385.5	410.5	423	435.5	460.5	473	485.5	498	523	535.5	548	560.5	585.5	598	610.5	635.5	648	660.5	673
5	435.5	448	473	485.5	498	523	535.5	548	560.5	585.5	598	610.5	635.5	648	660.5	673	698	710.5	723
6	485.5	498	510.5	535.5	548	560.5	585.5	598	610.5	623	648	660.5	673	698	710.5	723	735.5	760.5	773
7	535.5	548	560.5	585.5	598	610.5	623	648	660.5	673	685.5	710.5	723	735.5	760.5	773	785.5	798	823
8	573	598	610.5	623	648	660.5	673	685.5	710.5	723	735.5	760.5	773	785.5	798	823	835.5	848	860.5
9	623	635.5	660.5	673	685.5	710.5	723	735.5	748	773	785.5	798	823	835.5	848	860.5	885.5	898	910.5

Dimensions: Series SV2000

(mm)

Power supply with 7/8 inch connector

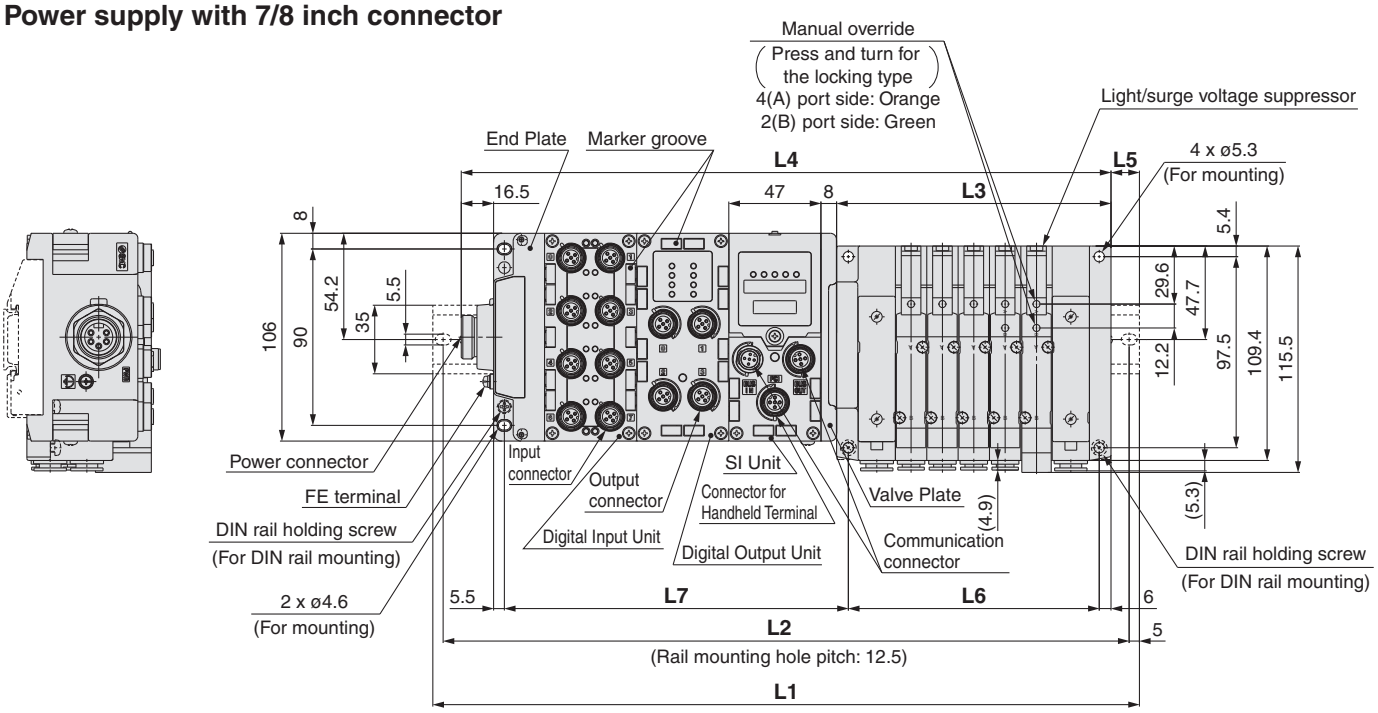

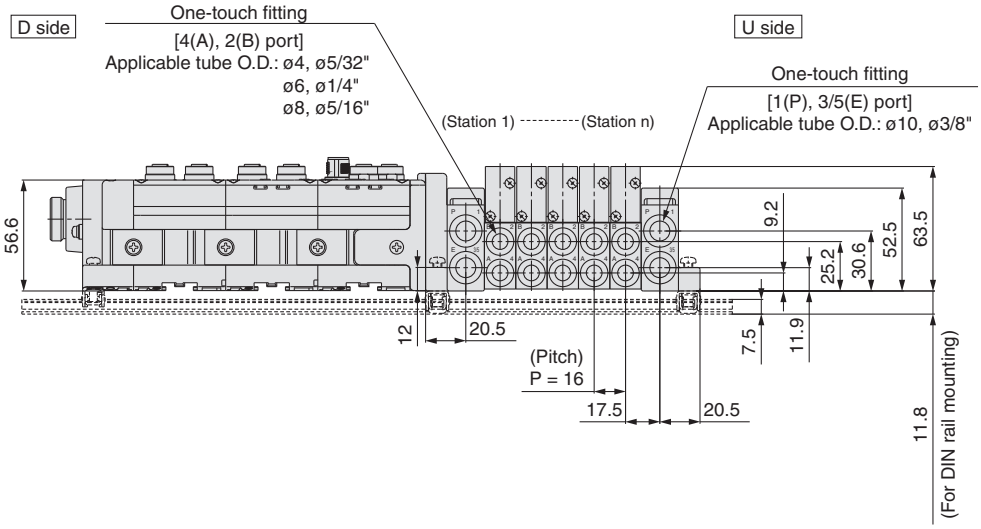

L2 = L1 – 10.5
L3 = 16 x n1 + 60
L4 = L3 + 97.5 + 47 x n2
L5 = (L1 – L4)/2
L6 = 16 x n1 + 48
L7 = 47 x n2 + 81.5

L1: DIN Rail Overall Length

(mm)

I/O Unit stations (n2) \ Valve stations (n1)	2	3	4	5	6	7	8	9	10	11	12	13	14	15	16	17	18	19	20
0	223	235.5	248	273	285.5	298	310.5	335.5	348	360.5	373	398	410.5	423	448	460.5	473	485.5	510.5
1	260.5	285.5	298	310.5	335.5	348	360.5	373	398	410.5	423	448	460.5	473	485.5	510.5	523	535.5	548
2	310.5	323	348	360.5	373	398	410.5	423	435.5	460.5	473	485.5	510.5	523	535.5	548	573	585.5	598
3	360.5	373	398	410.5	423	435.5	460.5	473	485.5	498	523	535.5	548	573	585.5	598	610.5	635.5	648
4	410.5	423	435.5	460.5	473	485.5	498	523	535.5	548	573	585.5	598	610.5	635.5	648	660.5	673	698
5	448	473	485.5	498	523	535.5	548	560.5	585.5	598	610.5	635.5	648	660.5	673	698	710.5	723	748
6	498	523	535.5	548	560.5	585.5	598	610.5	623	648	660.5	673	698	710.5	723	735.5	760.5	773	785.5
7	548	560.5	585.5	598	610.5	623	648	660.5	673	698	710.5	723	735.5	760.5	773	785.5	798	823	835.5
8	598	610.5	623	648	660.5	673	685.5	710.5	723	735.5	760.5	773	785.5	798	823	835.5	848	873	885.5
9	648	660.5	673	685.5	710.5	723	735.5	748	773	785.5	798	823	835.5	848	860.5	885.5	898	910.5	935.5

Dimensions: Series SV3000

(mm)

Power supply with M12 connector

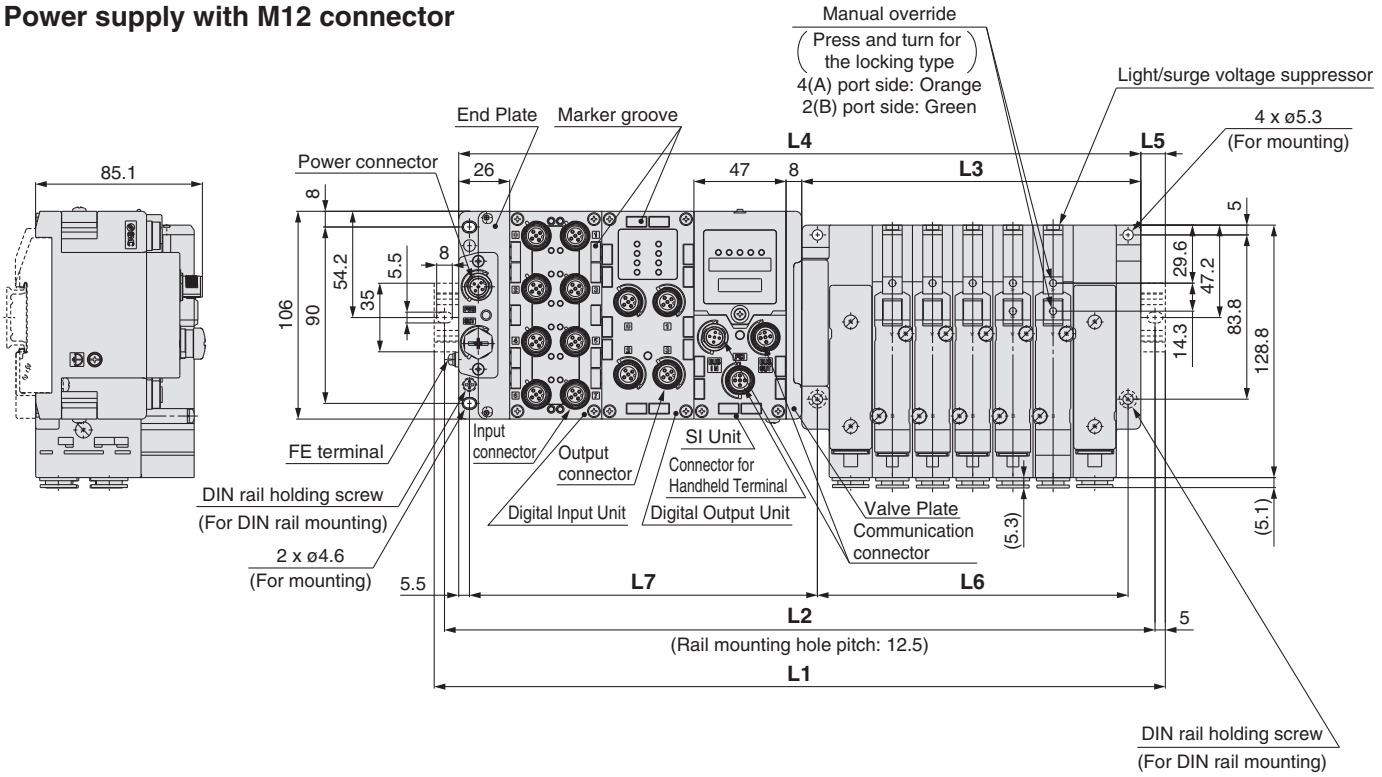

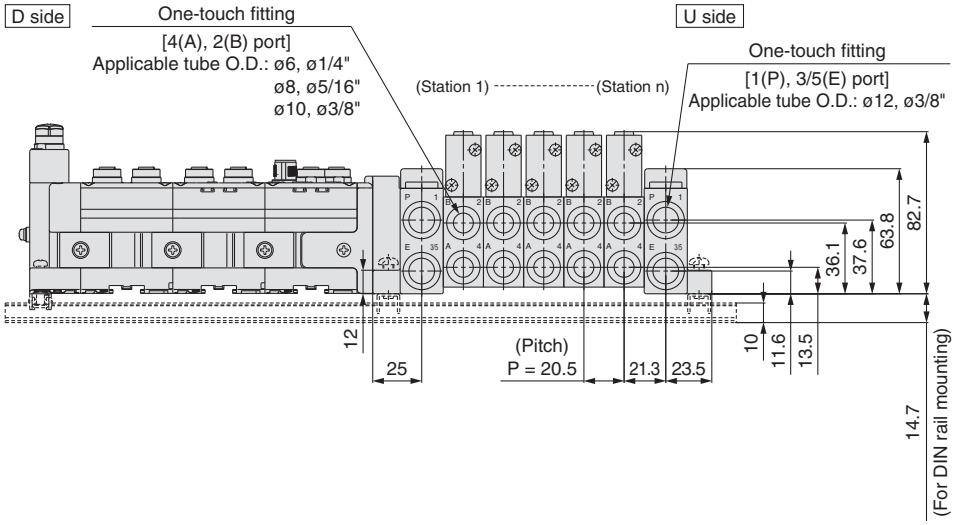

L2 = L1 – 10.5
L3 = 20.5 x n1 + 70.5
L4 = L3 + 81 + 47 x n2
L5 = (L1 – L4)/2
L6 = 20.5 x n1 + 56
L7 = 47 x n2 + 83.5

L1: DIN Rail Overall Length

(mm)

I/O Unit stations (n2) \ Valve stations (n1)	2	3	4	5	6	7	8	9	10	11	12	13	14	15	16	17	18	19	20
0	223	248	260.5	285.5	298	323	348	360.5	385.5	410.5	423	448	473	485.5	510.5	535.5	548	573	585.5
1	273	285.5	310.5	335.5	348	373	398	410.5	435.5	448	473	498	510.5	535.5	560.5	573	598	623	635.5
2	310.5	335.5	360.5	373	398	423	435.5	460.5	485.5	498	523	535.5	560.5	585.5	598	623	648	660.5	685.5
3	360.5	385.5	398	423	448	460.5	485.5	510.5	523	548	573	585.5	610.5	635.5	648	673	685.5	710.5	735.5
4	410.5	435.5	448	473	498	510.5	535.5	548	573	598	610.5	635.5	660.5	673	698	723	735.5	760.5	773
5	460.5	473	498	523	535.5	560.5	585.5	598	623	635.5	660.5	685.5	698	723	748	760.5	785.5	810.5	823
6	498	523	548	560.5	585.5	610.5	623	648	673	685.5	710.5	735.5	748	773	785.5	810.5	835.5	848	873
7	548	573	598	610.5	635.5	648	673	698	710.5	735.5	760.5	773	798	823	835.5	860.5	873	898	923
8	598	623	635.5	660.5	685.5	698	723	735.5	760.5	785.5	798	823	848	860.5	885.5	910.5	923	948	973
9	648	660.5	685.5	710.5	723	748	773	785.5	810.5	835.5	848	873	885.5	910.5	935.5	948	973	—	—

Dimensions: Series SV3000

(mm)

Power supply with 7/8 inch connector

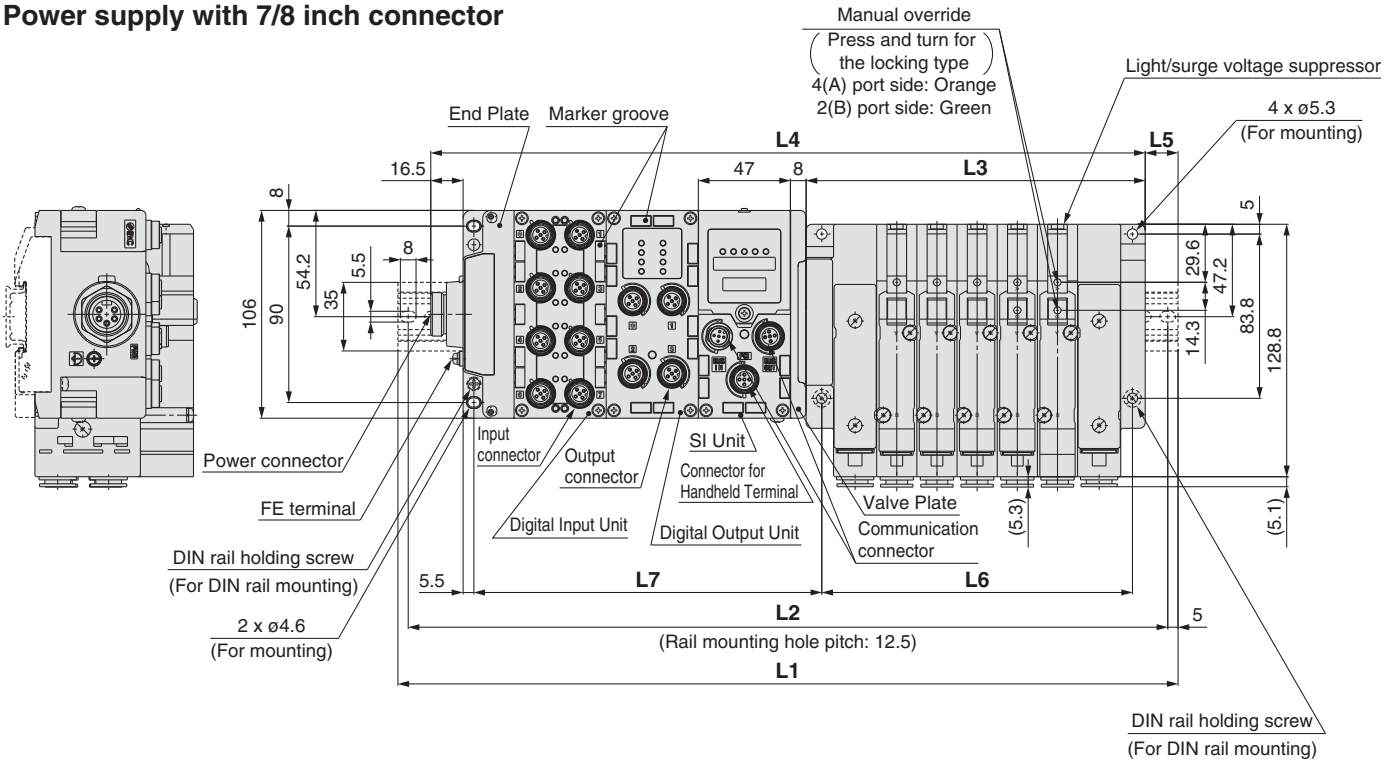

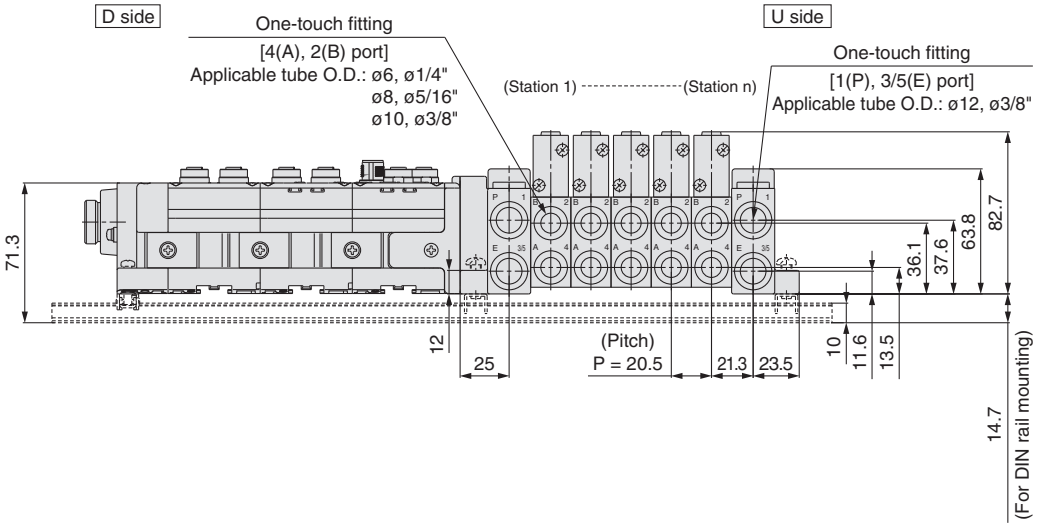

L2 = L1 – 10.5
L3 = 20.5 x n1 + 70.5
L4 = L3 + 97.5 + 47 x n2
L5 = (L1 – L4)/2
L6 = 20.5 x n1 + 56
L7 = 47 x n2 + 83.5

L1: DIN Rail Overall Length

(mm)

I/O Unit stations (n2) \ Valve stations (n1)	2	3	4	5	6	7	8	9	10	11	12	13	14	15	16	17	18	19	20
0	235.5	260.5	285.5	298	323	335.5	360.5	385.5	398	423	448	460.5	485.5	510.5	523	548	560.5	585.5	610.5
1	285.5	310.5	323	348	373	385.5	410.5	423	448	473	485.5	510.5	535.5	548	573	598	610.5	635.5	660.5
2	335.5	348	373	398	410.5	435.5	460.5	473	498	523	535.5	560.5	573	598	623	635.5	660.5	685.5	698
3	385.5	398	423	435.5	460.5	485.5	498	523	548	560.5	585.5	610.5	623	648	660.5	685.5	710.5	723	748
4	423	448	473	485.5	510.5	523	548	573	585.5	610.5	635.5	648	673	698	710.5	735.5	760.5	773	798
5	473	498	510.5	535.5	560.5	573	598	623	635.5	660.5	673	698	723	735.5	760.5	785.5	798	823	848
6	523	535.5	560.5	585.5	598	623	648	660.5	685.5	710.5	723	748	760.5	785.5	810.5	823	848	873	885.5
7	573	585.5	610.5	623	648	673	685.5	710.5	735.5	748	773	798	810.5	835.5	860.5	873	898	910.5	935.5
8	610.5	635.5	660.5	673	698	723	735.5	760.5	773	798	823	835.5	860.5	885.5	898	923	948	960.5	985.5
9	660.5	685.5	698	723	748	760.5	785.5	810.5	823	848	860.5	885.5	910.5	923	948	973	985.5	—	—

For Series EX600

Series S0700

How to Order Manifold

SS0750 – 08 C4 SD6Q 2 N 1 – B

Stations

Symbol	Stations
01	1 station
⋮	⋮
24 Note)	24 stations

Note) Max. number of stations depends on the wiring specifications.

Cylinder port size

Symbol	Port size	
C2	With ø2 One-touch fitting	Metric
C3	With ø3.2 One-touch fitting	
C4	With ø4 One-touch fitting	
CM	Mixed sizes and with port plug Note)	
N1	With ø1/8" One-touch fitting	Inch
N3	With ø5/32" One-touch fitting	
NM	Mixed sizes and with port plug Note)	

Note) Indicate the sizes on the manifold specification sheet in the case of "CM" and "NM".

Kit type

Kit type	Symbol	Specifications	Stations	Max. number of stations for special wiring specifications	Max. number of solenoids
S kit	SD60	Without SI Unit	1 to 12 stations	24 stations	24
	SD6Q	For DeviceNet™			
	SD6N	For PROFIBUS DP			
	SD6V	For CC-Link			
	SD6ZE	For EtherNet/IP™			
	SD6D	For EtherCAT			

Note) Max. number of stations depends on the number of solenoids.
Add the option symbol "-K" when the combination of single wiring and double wiring is specified.

- When "Without SI Unit" is specified, Valve Plate to connect the manifold and SI Unit is not mounted. Refer to page 51 for mounting method.
- When "Without SI Unit" is specified, I/O Unit cannot be mounted.

Type of actuation	Single type	Double, dual 3-port type
Number of solenoids	1	2

End Plate type

Nil	No End Plate
2	Power supply with M12 connector (Max. supplied current 2 A)
3	Power supply with 7/8 inch connector (Max. supplied current 8 A)

Note) Without SI Unit, the symbol is nil.

Option

Symbol	Option
Nil	None
B Note 2)	With back pressure check valve (All stations)
D	With DIN rail (Rail length: Standard)
D0	Without DIN rail (with bracket)
D□ Note 3)	With DIN rail (Rail length specified, □: Stations)
K Note 4)	Special wiring specifications (Except double wiring)
N	With name plate
R	External pilot
S	Built-in silencer

Note 1) When two or more symbols are specified, indicate them alphabetically. Example) "-BKN"
Note 2) When the back pressure check valve is used only for specified station, specify the back pressure check valve part number, and specify the station number to which the valve is mounted, on the manifold specification sheet.
Note 3) Specified station number shall be longer than manifold station number.
Note 4) When single wiring and double wiring are mixed, specify wiring type of each station on the manifold specification sheet.
Note 5) When "Without SI Unit (SD60)" is specified, "With DIN rail (D)" cannot be selected.

I/O Unit stations

Nil	None
1	1 station
⋮	⋮
9	9 stations

Note 1) Without SI Unit, the symbol is nil.
Note 2) SI Unit is not included in I/O Unit stations.
Note 3) When I/O Unit is selected, it is shipped separately and assembled by customer. Refer to the attached operation manual for mounting method.

SI Unit common

Nil	Positive common
N	Negative common

Note) Without SI Unit, the symbol is nil.

Refer to the catalog of each series for details on manifold solenoid valve specifications, Common Precautions and Specific Product Precautions.

How to Order Manifold Assembly

Example (S0700)

Manifold
Power supply with
M12 connector

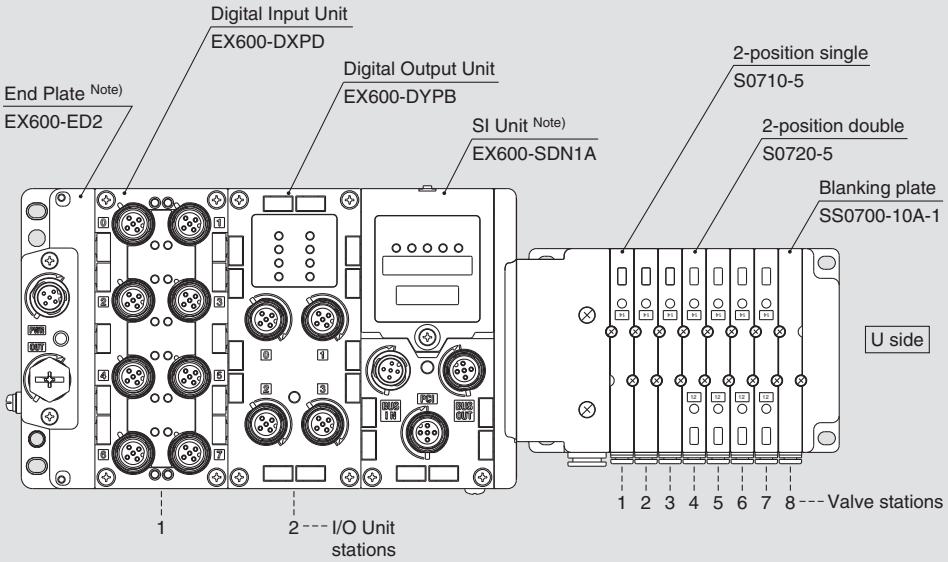

For the I/O Unit part number mounted, refer to the following pages.

- Digital Input Unit P.1
- Digital Output Unit P.1
- Digital Input/Output Unit P.1
- Analog Input Unit P.2
- Analog Output Unit P.2
- Analog Input/Output Unit P.2

Serial transmission kit

SS0750-08C4SD6Q2N2	**1 set**	**Manifold base part number**	Enter in order starting from the first station on the D side. If the arrangement becomes complicated, specify on a manifold specification sheet.
∗ **S0710-5**	**3 sets**	**Valve part number (Stations 1 to 3)**	
∗ **S0720-5**	**4 sets**	**Valve part number (Stations 4 to 7)**	
∗ **SS0700-10A-1**	**1 set**	**Blanking plate part number (Station 8)**	
∗ **EX600-DXPD**	**1 set**	**I/O Unit part number (Station 1)**	Enter in order starting from the first station on the D side. If the arrangement becomes complicated, specify on a manifold specification sheet.
∗ **EX600-DYPB**	**1 set**	**I/O Unit part number (Station 2)**	

The asterisk denotes the symbol for assembly.
Prefix it to the part nos. of the solenoid valve, etc.

Note) Do not enter the SI Unit part number and the End Plate part number together.

How to Order Valves

S07 1 0 □ – 5

Type of actuation

1	2-position single 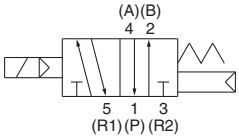	**A**	4-position dual 3-port valve (N.C. + N.C.) [Exhaust center] 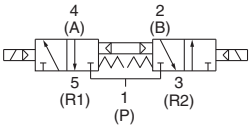
2	2-position double 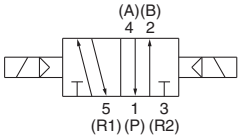	**B**	4-position dual 3-port valve (N.O. + N.O.) [Pressure center] 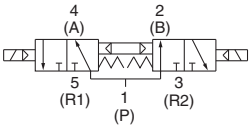
		C	4-position dual 3-port valve (N.C. + N.O.) 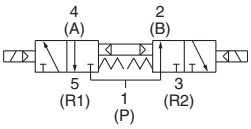

Coil voltage

5	24 VDC

Function

Symbol	Specification
Nil	Standard
R	External pilot Note)

Note) Not applicable for dual 3-port valves

Base mounted plug-in

Dimensions

(mm)

Power supply with M12 connector

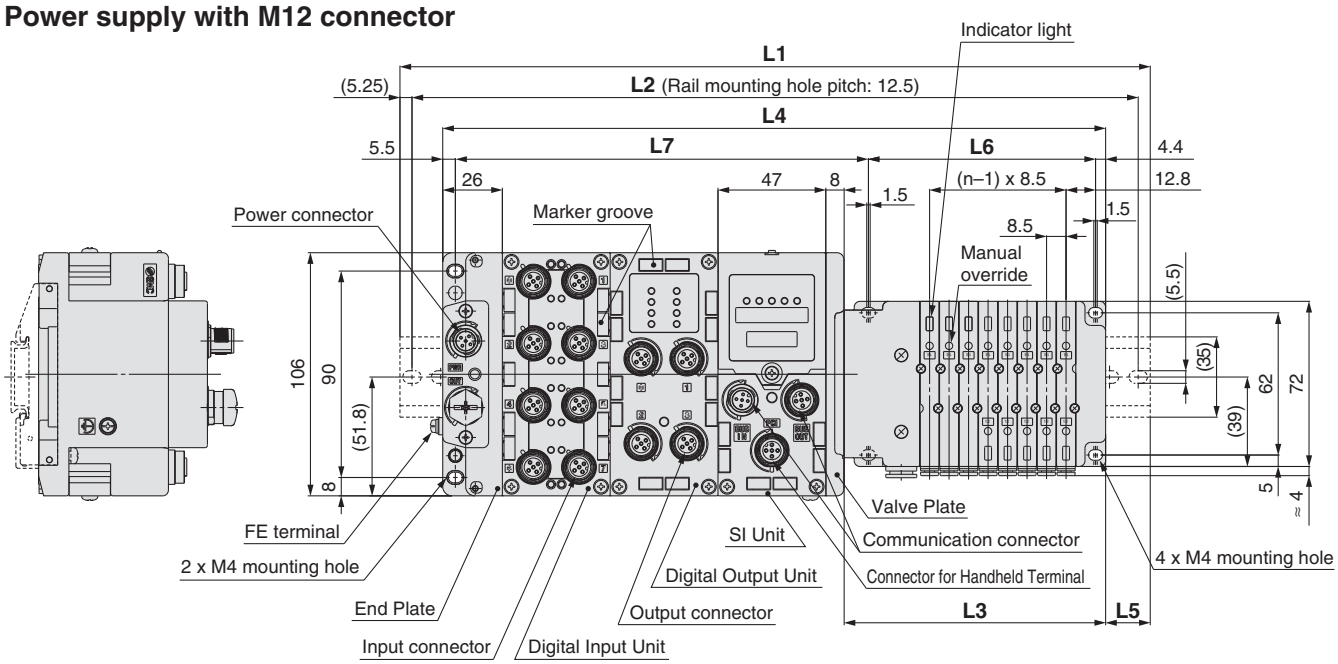

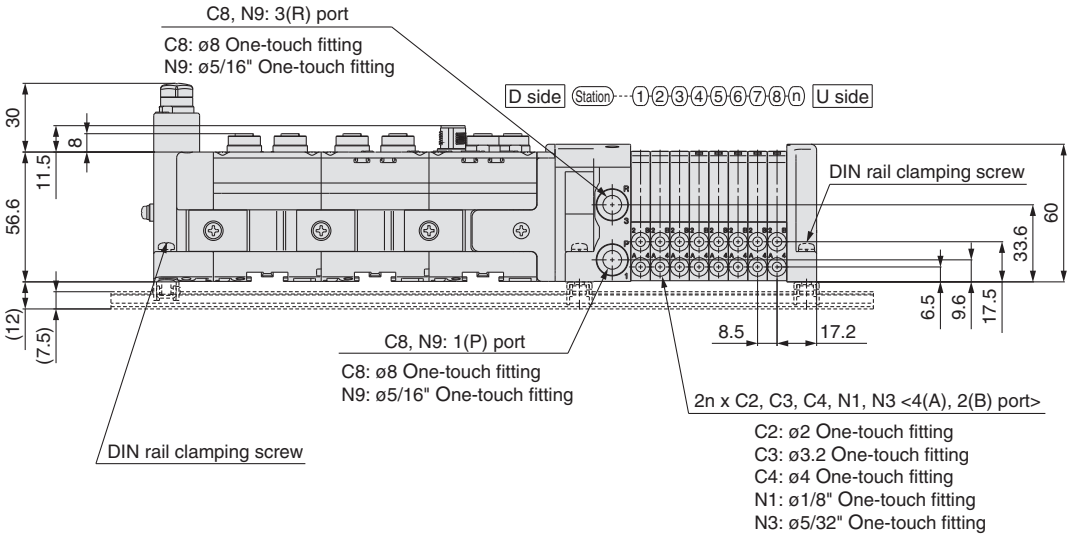

L2 = L1 – 10.5
L3 = 8.5 x n1 + 46
L4 = L3 + 81 + 47 x n2
L5 = (L1 – L4)/2
L6 = 8.5 x n1 + 31
L7 = 47 x n2 + 86.1

L1: DIN Rail Overall Length

(mm)

I/O Unit stations (n2) \ Valve stations (n1)	1	2	3	4	5	6	7	8	9	10	11	12	13	14	15	16	17	18	19	20	21	22	23	24
0	173	185.5	185.5	198	210.5	210.5	223	235.5	235.5	248	260.5	260.5	273	285.5	285.5	298	310.5	310.5	323	335.5	335.5	348	360.5	373
1	223	223	235.5	248	248	260.5	273	273	285.5	298	298	310.5	323	323	335.5	348	360.5	360.5	373	385.5	385.5	398	410.5	410.5
2	260.5	273	285.5	285.5	298	310.5	310.5	323	335.5	348	348	360.5	373	373	385.5	398	398	410.5	423	423	435.5	448	448	460.5
3	310.5	323	335.5	335.5	348	360.5	360.5	373	385.5	385.5	398	410.5	410.5	423	435.5	435.5	448	460.5	460.5	473	485.5	485.5	498	510.5
4	360.5	373	373	385.5	398	398	410.5	423	423	435.5	448	448	460.5	473	473	485.5	498	498	510.5	523	535.5	535.5	548	560.5
5	410.5	410.5	423	435.5	435.5	448	460.5	460.5	473	485.5	485.5	498	510.5	523	523	535.5	548	548	560.5	573	573	585.5	598	598
6	448	460.5	473	473	485.5	498	510.5	510.5	523	535.5	535.5	548	560.5	560.5	573	585.5	585.5	598	610.5	610.5	623	635.5	635.5	648
7	498	510.5	523	523	535.5	548	548	560.5	573	573	585.5	598	598	610.5	623	623	635.5	648	648	660.5	673	673	685.5	698
8	548	560.5	560.5	573	585.5	585.5	598	610.5	610.5	623	635.5	635.5	648	660.5	660.5	673	685.5	698	698	710.5	723	723	735.5	748
9	598	598	610.5	623	623	635.5	648	648	660.5	673	685.5	685.5	698	710.5	710.5	723	735.5	735.5	748	760.5	760.5	773	785.5	785.5

Dimensions

(mm)

Power supply with 7/8 inch connector

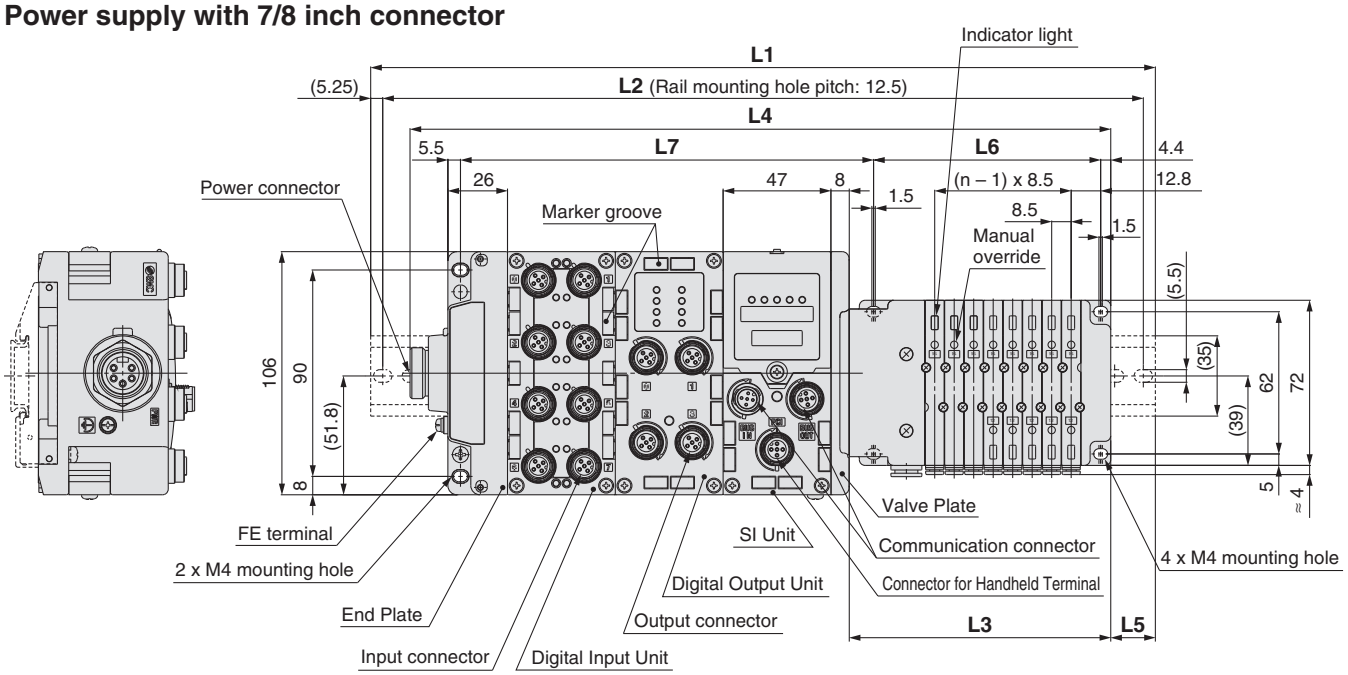

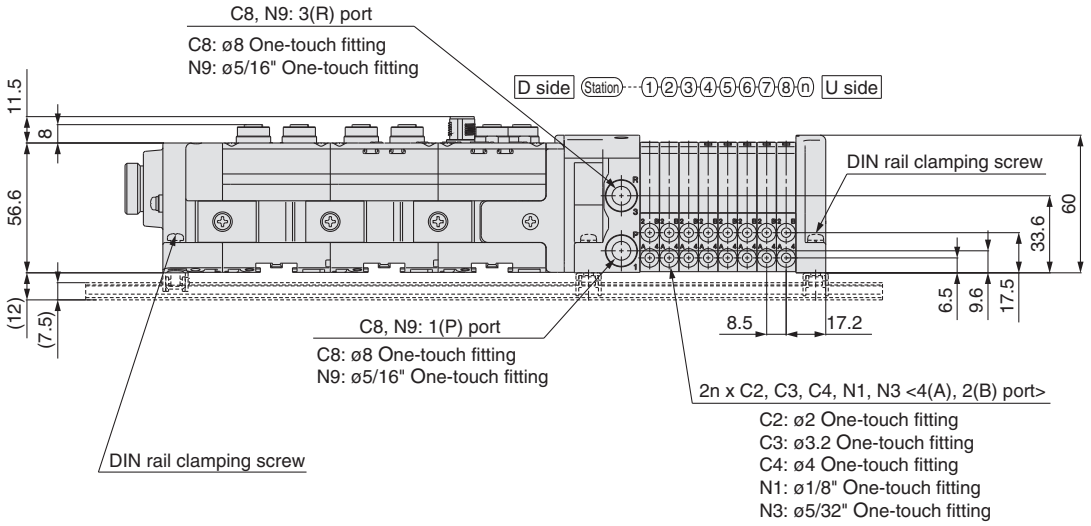

L2 = L1 – 10.5
L3 = 8.5 x n1 + 46
L4 = L3 + 97.5 + 47 x n2
L5 = (L1 – L4)/2
L6 = 8.5 x n1 + 31
L7 = 47 x n2 + 86.1

L1: DIN Rail Overall Length

(mm)

I/O Unit stations (n2) \ Valve stations (n1)	1	2	3	4	5	6	7	8	9	10	11	12	13	14	15	16	17	18	19	20	21	22	23	24
0	185.5	198	210.5	210.5	223	235.5	235.5	248	260.5	260.5	273	285.5	285.5	298	310.5	310.5	323	335.5	335.5	348	360.5	360.5	373	385.5
1	235.5	248	248	260.5	273	273	285.5	298	298	310.5	323	323	335.5	348	348	360.5	373	385.5	385.5	398	410.5	410.5	423	435.5
2	285.5	285.5	298	310.5	310.5	323	335.5	335.5	348	360.5	373	373	385.5	398	398	410.5	423	423	435.5	448	448	460.5	473	473
3	323	335.5	348	360.5	360.5	373	385.5	385.5	398	410.5	410.5	423	435.5	435.5	448	460.5	460.5	473	485.5	485.5	498	510.5	510.5	523
4	373	385.5	398	398	410.5	423	423	435.5	448	448	460.5	473	473	485.5	498	498	510.5	523	523	535.5	548	560.5	560.5	573
5	423	435.5	435.5	448	460.5	460.5	473	485.5	485.5	498	510.5	510.5	523	535.5	548	548	560.5	573	573	585.5	598	598	610.5	623
6	473	473	485.5	498	498	510.5	523	535.5	535.5	548	560.5	560.5	573	585.5	585.5	598	610.5	610.5	623	635.5	635.5	648	660.5	660.5
7	523	523	535.5	548	548	560.5	573	573	585.5	598	598	610.5	623	623	635.5	648	648	660.5	673	673	685.5	698	698	710.5
8	560.5	573	585.5	585.5	598	610.5	610.5	623	635.5	635.5	648	660.5	660.5	673	685.5	685.5	698	710.5	723	723	735.5	748	748	760.5
9	610.5	623	623	635.5	648	648	660.5	673	673	685.5	698	710.5	710.5	723	735.5	735.5	748	760.5	760.5	773	785.5	785.5	798	810.5

For Series EX600

Series VQC1000

How to Order Manifold

VV5QC 1 1 – 08 C6 SD6Q 2 N 1 – ☐

Series VQC1000

Base mounted plug-in

Stations

Symbol	Stations
01	1 station
⋮	⋮
24 Note)	24 stations

Note) Max. number of stations depends on the wiring specifications.

Cylinder port size

C3	With ø3.2 One-touch fitting
C4	With ø4 One-touch fitting
C6	With ø6 One-touch fitting
M5	M5 thread
CM	Mixed sizes and with port plug
L3	Top ported elbow with ø3.2 One-touch fitting
L4	Top ported elbow with ø4 One-touch fitting
L6	Top ported elbow with ø6 One-touch fitting
L5	M5 thread
B3	Bottom ported elbow with ø3.2 One-touch fitting
B4	Bottom ported elbow with ø4 One-touch fitting
B6	Bottom ported elbow with ø6 One-touch fitting
B5	M5 thread
LM	Mixed port sizes of elbow piping

Note 1) Indicate the sizes on the manifold specification sheet in the case of "CM" and "LM".
Note 2) Symbols for inch size are as follows.
- N1: ø1/8"
- N3: ø5/32"
- N7: ø1/4"
- NM: Mixed sizes

The top ported elbow is LN☐ and the bottom ported elbow is BN☐.
For NM, specify it on the manifold specification sheet.

Kit type

Kit type	Symbol	Specifications	Stations	Max. number of stations for special wiring specifications	Max. number of solenoids
S kit	SD60	Without SI Unit	1 to 12 stations	24 stations	24
	SD6Q	For DeviceNet™			
	SD6N	For PROFIBUS DP			
	SD6V	For CC-Link			
	SD6ZE	For EtherNet/IP™			
	SD6D	For EtherCAT			

Note) Max. number of stations depends on the number of solenoids.
Add the option symbol "-K" when the combination of single wiring and double wiring is specified.
- When "Without SI Unit" is specified, I/O Unit cannot be mounted.
- When "Without SI Unit" is specified, Valve Plate to connect the manifold and SI Unit is not mounted. Refer to page 51 for mounting method.

Refer to the catalog of each series for details on manifold solenoid valve specifications, Common Precautions and Specific Product Precautions.

Option

Nil	None
B Note 2)	With back pressure check valve (All stations)
D	With DIN rail (Rail length: Standard)
D0	Without DIN rail (with bracket)
D☐ Note 3)	With DIN rail (Rail length specified, ☐: Stations)
K Note 4)	Special wiring specifications (Except double wiring)
N	With name plate
R Note 5)	External pilot
S Note 6)	Built-in silencer, Direct exhaust

Note 1) When two or more symbols are specified, indicate them alphabetically. Example) "-BRS"
Note 2) When the back pressure check valve is used only for specified station, specify the back pressure check valve part number, and specify the station number to which the valve is mounted, on the manifold specification sheet.
Note 3) Specified station number shall be longer than manifold station number.
Note 4) When single wiring and double wiring are mixed, specify wiring type of each station on the manifold specification sheet.
Note 5) When the external pilot type is selected, also specify the external pilot type for valves.
Note 6) Built-in silencer type dose not satisfy IP67.
Note 7) When specification change from no DIN rail type to DIN rail mounting type, please consult SMC.
Note 8) When "Without SI Unit (SD60)" is specified, "With DIN rail (D)" cannot be selected.
Note 9) DIN rail is not attached (but shipped together) on the manifold in the case of with DIN rail. Refer to the VQC series catalog (CAT.ES11-101) for mounting method.

I/O Unit stations

Nil	None
1	1 station
⋮	⋮
9	9 stations

Note 1) Without SI Unit, the symbol is nil.
Note 2) SI Unit is not included in I/O Unit stations.
Note 3) When I/O Unit is selected, it is shipped separately and assembled by customer.
Refer to the attached operation manual for mounting method.
Note 4) Refer to page 50 for details on enclosure.

SI Unit common

Nil	Positive common
N	Negative common

Note) Without SI Unit, the symbol is nil.

End Plate type

Nil	No End Plate
2	Power supply with M12 connector (Max. supplied current 2 A)
3	Power supply with 7/8 inch connector (Max. supplied current 8 A)

Note) Without SI Unit, the symbol is nil.

How to Order Manifold Assembly

Example (VV5QC11)

Manifold
Power supply with
M12 connector

For the I/O Unit part number mounted, refer to the following pages.

- Digital Input Unit ····· P.1
- Digital Output Unit ····· P.1
- Digital Input/Output Unit ····· P.1
- Analog Input Unit ····· P.2
- Analog Output Unit ····· P.2
- Analog Input/Output Unit ····· P.2

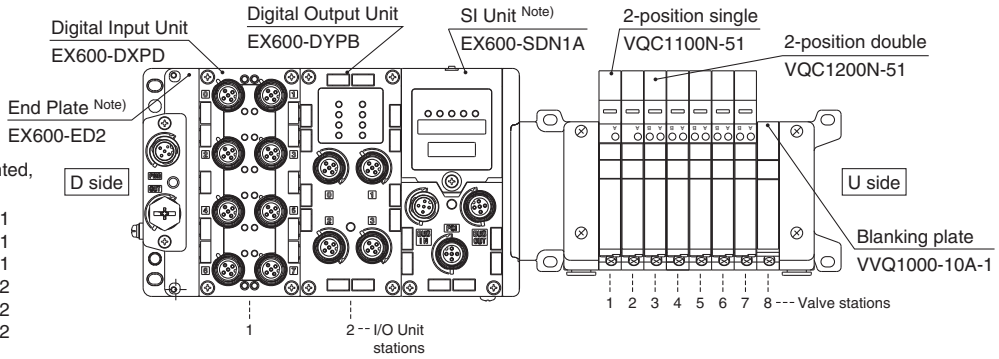

Serial transmission kit

VV5QC11-08C6SD6Q2N2	**1 set**	**Manifold base part number**	
∗ **VQC1100N-51**	**2 sets**	**Valve part number (Stations 1 to 2)**	Enter in order starting from the first station on the D side. If the arrangement becomes complicated, specify on a manifold specification sheet.
∗ **VQC1200N-51**	**5 sets**	**Valve part number (Stations 3 to 7)**	
∗ **VVQ1000-10A-1**	**1 set**	**Blanking plate part number (Station 8)**	
∗ **EX600-DXPD**	**1 set**	**I/O Unit part number (Station 1)**	Enter in order starting from the first station on the D side. If the arrangement becomes complicated, specify on a manifold specification sheet.
∗ **EX600-DYPB**	**1 set**	**I/O Unit part number (Station 2)**	

The asterisk denotes the symbol for assembly.
Prefix it to the part nos. of the solenoid valve, etc.

Note) Do not enter the SI Unit part number and the End Plate part number together.

How to Order Valves

VQC1 1 0 0 □ – 5 □ 1

Series VQC1000

Type of actuation

1	2-position single (A) (B) 4 2 / 5 1 3 (R1)(P)(R2)	Note) A	4-position dual 3-port valve (A) (A) 4 (B) 2 / 5 (R1) N.C. / 1 (P) / 3 (R2) N.C.
2	2-position double (Metal) (A) (B) 4 2 / 5 1 3 (R1)(P)(R2)	Note) B	4-position dual 3-port valve (B) (A) 4 (B) 2 / 5 (R1) N.O. / 1 (P) / 3 (R2) N.O.
	2-position double (Rubber) (A) (B) 4 2 / 5 1 3 (R1)(P)(R2)	Note) C	4-position dual 3-port valve (C) (A) 4 (B) 2 / 5 (R1) N.C. / 1 (P) / 3 (R2) N.O.
3	3-position closed center (A) (B) 4 2 / 5 1 3 (R1) (P) (R2)		
4	3-position exhaust center (A) (B) 4 2 / 5 1 3 (R1) (P) (R2)		
5	3-position pressure center (A) (B) 4 2 / 5 1 3 (R1) (P) (R2)		

Note) Only rubber seal type

Coil voltage

5	24 VDC

Function

Nil	Standard (0.4 W)
B	Quick response type (0.95 W)
K Note 2)	High pressure type (145 psi)
N Note 3)	Negative common
R Note 4)	External pilot

Note 1) When two or more symbols are specified, indicate them alphabetically. However, combination of "B" and "K" is not possible.
Note 2) Only metal seal type
Note 3) When negative common is specified for the SI Unit, select and mount the valve of negative common.
Note 4) Not applicable for dual 3-port valves

Seal type

0	Metal seal
1	Rubber seal

Manual override

Nil: Non-locking push type (Tool required)

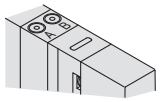

B: Locking type (Tool required)

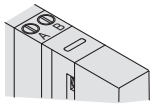

C: Locking type (Manual)

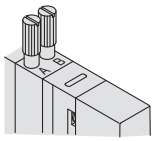

D: Slide locking type (Manual)

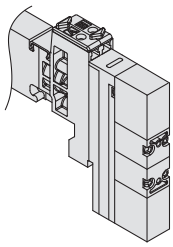

Dimensions

(mm)

Power supply with M12 connector

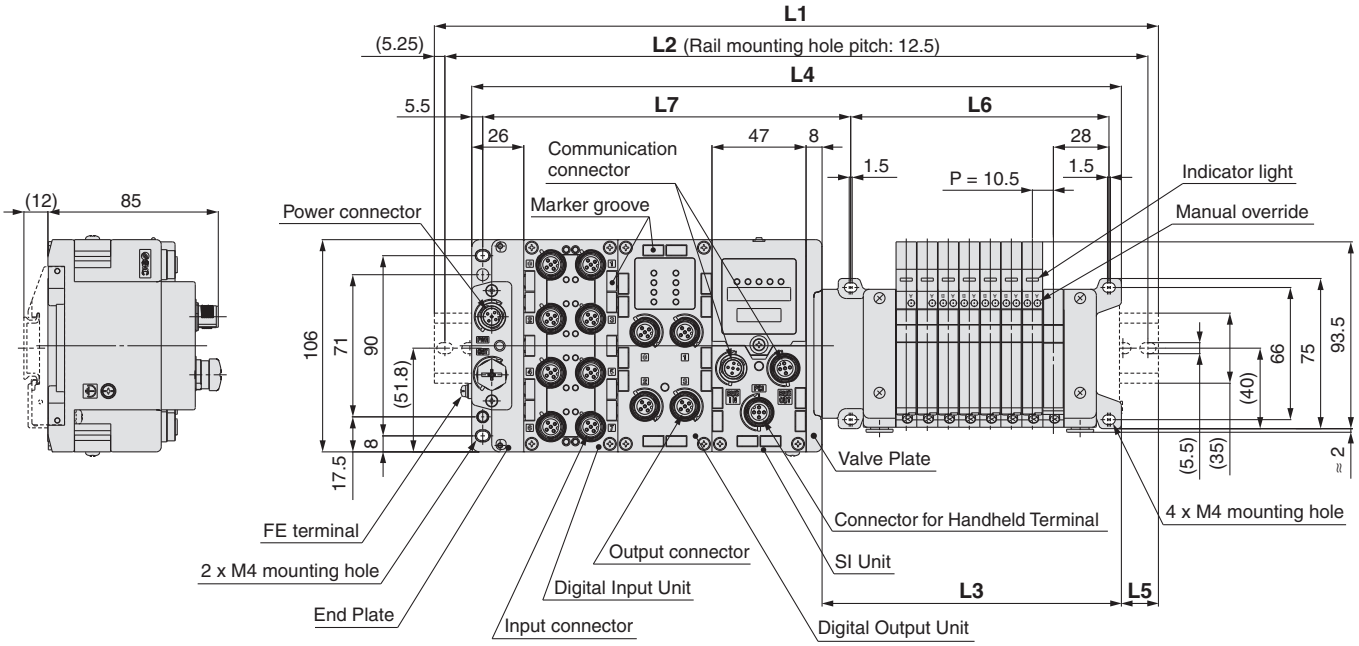

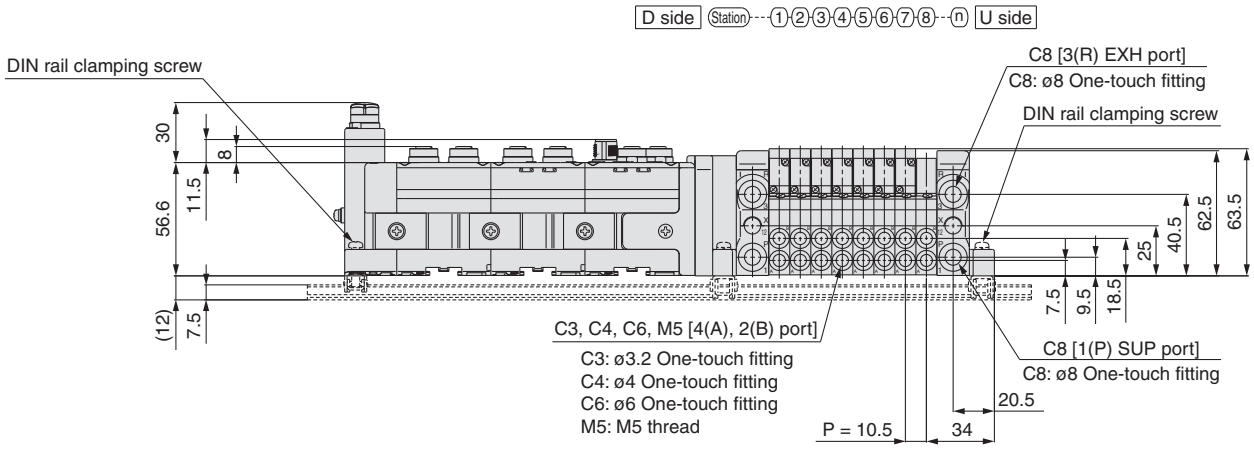

L2 = L1 – 10.5
L3 = 10.5 x n1 + 65.5
L4 = L3 + 81 + 47 x n2
L5 = (L1 – L4)/2
L6 = 10.5 x n1 + 45
L7 = 47 x n2 + 89.8

L1: DIN Rail Overall Length

(mm)

I/O Unit stations (n2) \ Valve stations (n1)	1	2	3	4	5	6	7	8	9	10	11	12	13	14	15	16	17	18	19	20	21	22	23	24
0	198	198	210.5	223	235.5	248	260.5	260.5	273	285.5	298	310.5	323	335.5	335.5	348	360.5	373	385.5	398	398	410.5	423	435.5
1	235.5	248	260.5	273	285.5	298	298	310.5	323	335.5	348	360.5	360.5	373	385.5	398	410.5	423	423	435.5	448	460.5	473	485.5
2	285.5	298	310.5	323	323	335.5	348	360.5	373	385.5	398	398	410.5	423	435.5	448	460.5	460.5	473	485.5	498	510.5	523	523
3	335.5	348	360.5	360.5	373	385.5	398	410.5	423	423	435.5	448	460.5	473	485.5	485.5	498	510.5	523	535.5	548	560.5	560.5	573
4	385.5	385.5	398	410.5	423	435.5	448	460.5	460.5	473	485.5	498	510.5	523	523	535.5	548	560.5	573	585.5	585.5	598	610.5	623
5	423	435.5	448	460.5	473	485.5	485.5	498	510.5	523	535.5	548	548	560.5	573	585.5	598	610.5	623	623	635.5	648	660.5	673
6	473	485.5	498	510.5	523	523	535.5	548	560.5	573	585.5	585.5	598	610.5	623	635.5	648	648	660.5	673	685.5	698	710.5	710.5
7	523	535.5	548	548	560.5	573	585.5	598	610.5	610.5	623	635.5	648	660.5	673	685.5	685.5	698	710.5	723	735.5	748	748	760.5
8	573	585.5	585.5	598	610.5	623	635.5	648	648	660.5	673	685.5	698	710.5	710.5	723	735.5	748	760.5	773	773	785.5	798	810.5
9	610.5	623	635.5	648	660.5	673	673	685.5	698	710.5	723	735.5	748	748	760.5	773	785.5	798	810.5	810.5	823	835.5	848	860.5

Dimensions

(mm)

Power supply with 7/8 inch connector

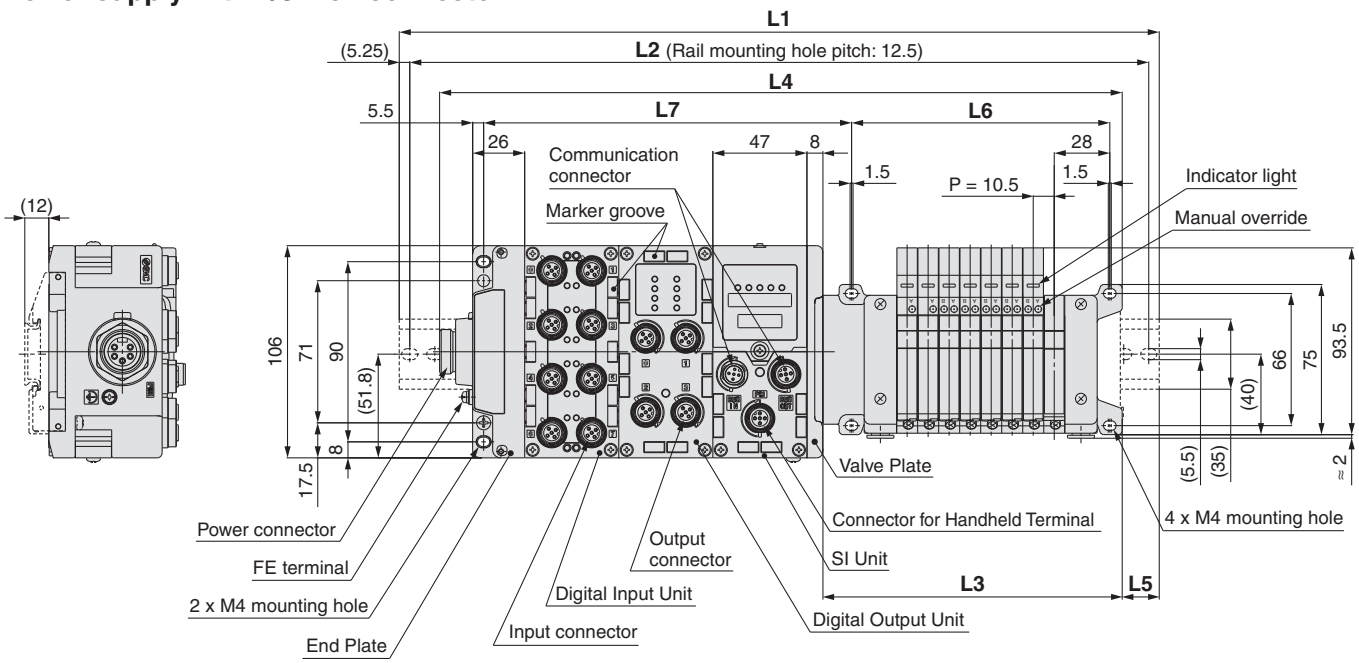

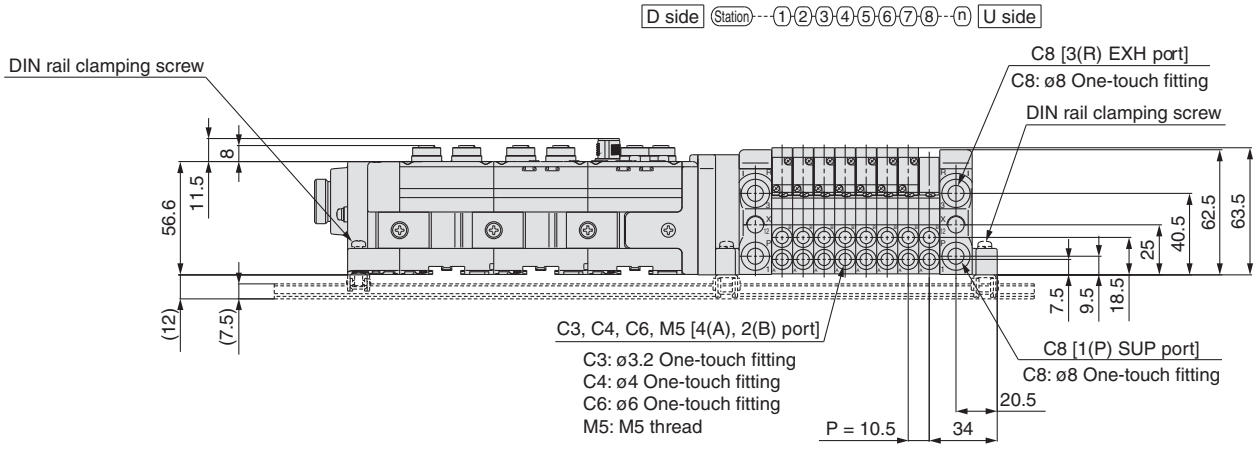

L2 = L1 – 10.5
L3 = 10.5 x n1 + 65.5
L4 = L3 + 97.5 + 47 x n2
L5 = (L1 – L4)/2
L6 = 10.5 x n1 + 45
L7 = 47 x n2 + 89.8

L1: DIN Rail Overall Length

(mm)

I/O Unit stations (n2) \ Valve stations (n1)	1	2	3	4	5	6	7	8	9	10	11	12	13	14	15	16	17	18	19	20	21	22	23	24
0	210.5	223	235.5	235.5	248	260.5	273	285.5	298	298	310.5	323	335.5	348	360.5	373	373	385.5	398	410.5	423	435.5	435.5	448
1	260.5	273	273	285.5	298	310.5	323	335.5	335.5	348	360.5	373	385.5	398	398	410.5	423	435.5	448	460.5	460.5	473	485.5	498
2	298	310.5	323	335.5	348	360.5	360.5	373	385.5	398	410.5	423	435.5	435.5	448	460.5	473	485.5	498	498	510.5	523	535.5	548
3	348	360.5	373	385.5	398	398	410.5	423	435.5	448	460.5	460.5	473	485.5	498	510.5	523	523	535.5	548	560.5	573	585.5	598
4	398	410.5	423	423	435.5	448	460.5	473	485.5	498	498	510.5	523	535.5	548	560.5	560.5	573	585.5	598	610.5	623	623	635.5
5	448	460.5	460.5	473	485.5	498	510.5	523	523	535.5	548	560.5	573	585.5	585.5	598	610.5	623	635.5	648	660.5	660.5	673	685.5
6	485.5	498	510.5	523	535.5	548	560.5	560.5	573	585.5	598	610.5	623	623	635.5	648	660.5	673	685.5	685.5	698	710.5	723	735.5
7	535.5	548	560.5	573	585.5	585.5	598	610.5	623	635.5	648	648	660.5	673	685.5	698	710.5	723	723	735.5	748	760.5	773	785.5
8	585.5	598	610.5	623	623	635.5	648	660.5	673	685.5	685.5	698	710.5	723	735.5	748	748	760.5	773	785.5	798	810.5	810.5	823
9	635.5	648	648	660.5	673	685.5	698	710.5	710.5	723	735.5	748	760.5	773	785.5	785.5	798	810.5	823	835.5	848	848	860.5	873

For Series EX600

Series VQC2000

How to Order Manifold

VV5QC 2 1 – 08 C8 SD6Q 2 N 1 – ☐

Series VQC2000

Base mounted plug-in

Stations

Symbol	Stations
01	1 station
⋮	⋮
24 Note)	24 stations

Note) Max. number of stations depends on the wiring specifications.

Cylinder port size

C4	With ø4 One-touch fitting
C6	With ø6 One-touch fitting
C8	With ø8 One-touch fitting
CM	Mixed sizes and with port plug
L4	Top ported elbow with ø4 One-touch fitting
L6	Top ported elbow with ø6 One-touch fitting
L8	Top ported elbow with ø8 One-touch fitting
B4	Bottom ported elbow with ø4 One-touch fitting
B6	Bottom ported elbow with ø6 One-touch fitting
B8	Bottom ported elbow with ø8 One-touch fitting
LM	Mixed port sizes of elbow piping

Note 1) Indicate the sizes on the manifold specification sheet in the case of "CM" and "LM".

Note 2) Symbols for inch size are as follows.
- N3: ø5/32"
- N7: ø1/4"
- N9: ø5/16"
- NM: Mixed sizes

The top ported elbow is LN☐ and the bottom ported elbow is BN☐.

For NM, specify it on the manifold specification sheet.

Kit type

Kit type	Symbol	Specifications	Stations	Max. number of stations for special wiring specifications	Max. number of solenoids
S kit	SD60	Without SI Unit	1 to 12 stations	24 stations	24
	SD6Q	For DeviceNet™			
	SD6N	For PROFIBUS DP			
	SD6V	For CC-Link			
	SD6ZE	For EtherNet/IP™			
	SD6D	For EtherCAT			

Note) Max. number of stations depends on the number of solenoids.
Add the option symbol "-K" when the combination of single wiring and double wiring is specified.

- When "Without SI Unit" is specified, I/O Unit cannot be mounted.
- When "Without SI Unit" is specified, Valve Plate to connect the manifold and SI Unit is not mounted. Refer to back page 51 for mounting method.

End Plate type

Nil	No End Plate
2	Power supply with M12 connector (Max. supplied current 2 A)
3	Power supply with 7/8 inch connector (Max. supplied current 8 A)

Note) Without SI Unit, the symbol is nil.

Option

Nil	None
B Note 2)	With back pressure check valve (All stations)
D Note 3)	With DIN rail (Rail length: Standard)
D0	Without DIN rail (with bracket)
D☐ Note 4)	With DIN rail (Rail length specified, ☐: Stations)
K Note 5)	Special wiring specifications (Except double wiring)
N	With name plate
R Note 6)	External pilot
S Note 7)	Built-in silencer, Direct exhaust
T Note 8)	P and R ports included on both sides of the U side

Note 1) When two or more symbols are specified, indicate them alphabetically. Example) "-BRS"

Note 2) When the back pressure check valve is used only for specified station, specify the back pressure check valve part number, and specify the station number to which the valve is mounted, on the manifold specification sheet.

Note 3) When selecting the DIN rail mounting (with DIN rail) of the VQC2000 series with the End Plate to a power supply 7/8 inch connector, 9 I/O Unit stations will result in a total of 23 valve stations. With 24 stations, the DIN rail mounting (with DIN rail) cannot be indicated, so please exercise caution. (Refer to "DIN Rail Overall Length" on page 44.)

Note 4) Specified station number shall be longer than manifold station number.

Note 5) When single wiring and double wiring are mixed, specify wiring type of each station on the manifold specification sheet.

Note 6) When the external pilot type is selected, also specify the external pilot type for valves.

Note 7) Built-in silencer type does not satisfy IP67.

Note 8) 2 ports for SUP and EXH are included on both sides of U side (cylinder port and coil side) with ø12 one-touch fittings.

Note 9) When specification change from no DIN rail type to DIN rail mounting type, please consult SMC.

Note 10) When "Without SI Unit (SD60)" is specified, "With DIN rail (D)" cannot be selected.

Note 11) DIN rail is not attached (but shipped together) on the manifold in the case of with DIN rail. Refer to the VQC series catalog (CAT.ES11-101) for mounting method.

I/O Unit stations

Nil	None
1	1 station
⋮	⋮
9	9 stations

Note 1) Without SI Unit, the symbol is nil.

Note 2) SI Unit is not included in I/O Unit stations.

Note 3) When I/O Unit is selected, it is shipped separately and assembled by customer. Refer to the attached operation manual for mounting method.

Note 4) Refer to page 50 for details on enclosure.

SI Unit common

Nil	Positive common
N	Negative common

Note) Without SI Unit, the symbol is nil.

How to Order Valves

VQC2 1 0 0 ☐ – 5 ☐ 1

Series VQC2000

Type of actuation

1	2-position single 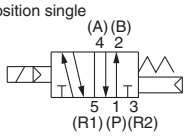	Note) **A**	4-position dual 3-port valve 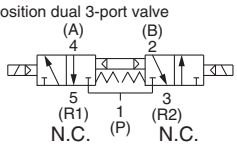
2	2-position double (Metal) 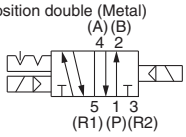	Note) **B**	4-position dual 3-port valve 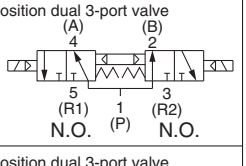
2	2-position double (Rubber) 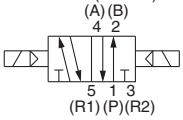	Note) **C**	4-position dual 3-port valve 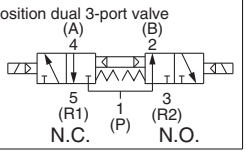
3	3-position closed center 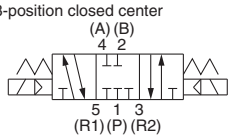		
4	3-position exhaust center 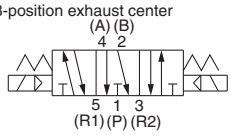		
5	3-position pressure center 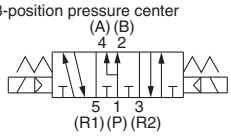		

Note) Only rubber seal type

Seal type

0	Metal seal
1	Rubber seal

Function

Nil	Standard (0.4 W)
B	Quick response type (0.95 W)
K Note 2)	High pressure type (145 psi)
N Note 3)	Negative common
R Note 4)	External pilot

Note 1) When two or more symbols are specified, indicate them alphabetically. However, combination of "B" and "K" is not possible.

Note 2) Only metal seal type

Note 3) When negative common is specified for SI Unit, select and mount the valve of negative common.

Note 4) Not applicable for dual 3-port valves

Coil voltage

5	24 VDC

Manual override

Nil: Non-locking push type (Tool required)

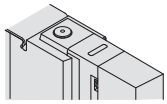

B: Locking type (Tool required)

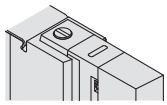

C: Locking type (Manual)

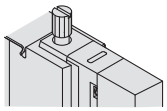

D: Slide locking type (Manual)

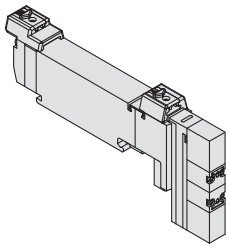

Refer to the catalog of each series for details on manifold solenoid valve specifications, Common Precautions and Specific Product Precautions.

Dimensions

(mm)

Power supply with M12 connector

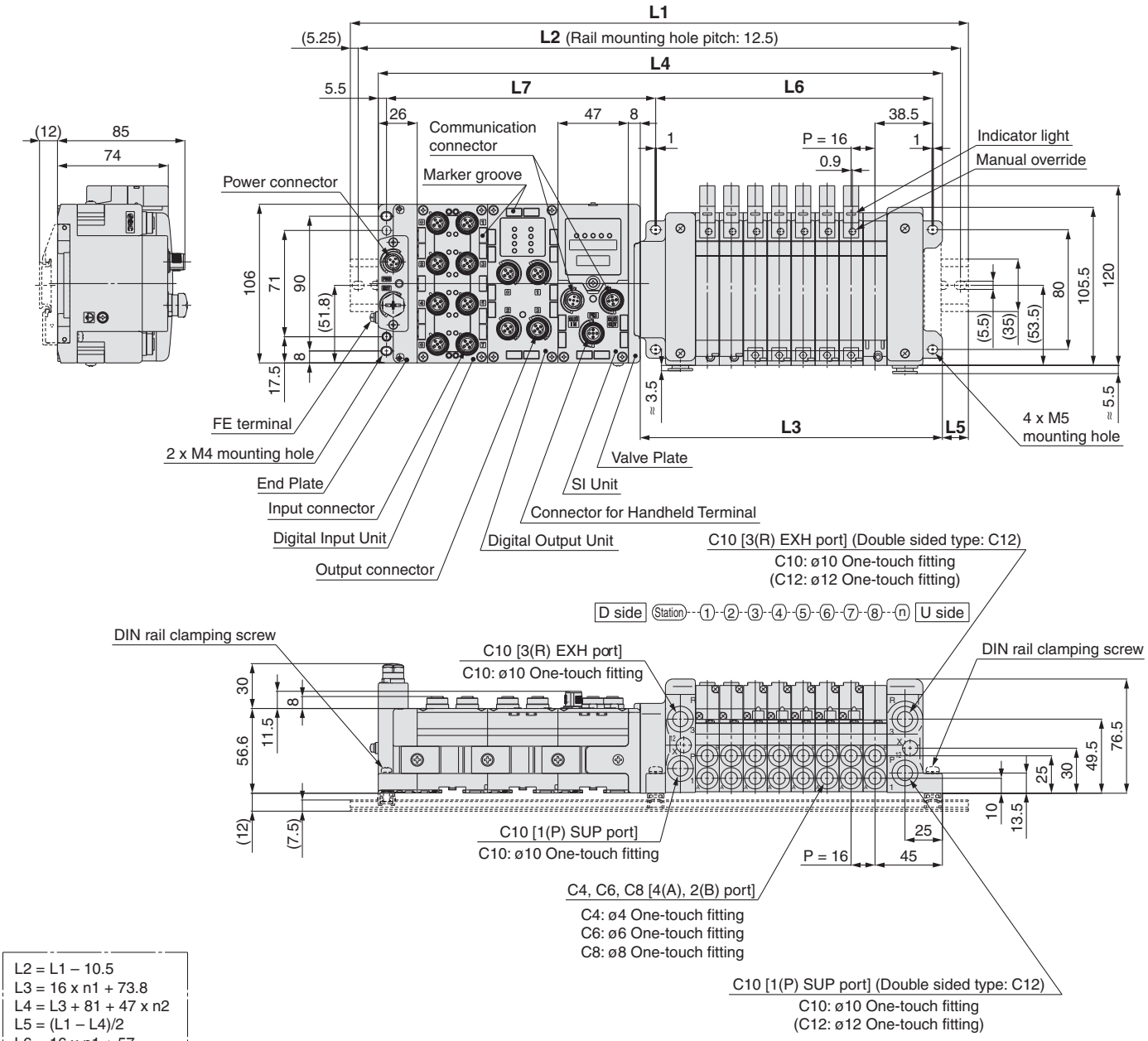

L2 = L1 – 10.5
L3 = 16 x n1 + 73.8
L4 = L3 + 81 + 47 x n2
L5 = (L1 – L4)/2
L6 = 16 x n1 + 57
L7 = 47 x n2 + 85.8

L1: DIN Rail Overall Length

(mm)

I/O Unit stations (n2) \ Valve stations (n1)	1	2	3	4	5	6	7	8	9	10	11	12	13	14	15	16	17	18	19	20	21	22	23	24
0	210.5	223	235.5	260.5	273	285.5	298	323	335.5	348	373	385.5	398	410.5	435.5	448	460.5	473	498	510.5	523	548	560.5	573
1	248	273	285.5	298	323	335.5	348	360.5	385.5	398	410.5	435.5	448	460.5	473	498	510.5	523	548	560.5	573	585.5	610.5	623
2	298	323	335.5	348	360.5	385.5	398	410.5	423	448	460.5	473	498	510.5	523	535.5	560.5	573	585.5	610.5	623	635.5	648	673
3	348	360.5	385.5	398	410.5	423	448	460.5	473	498	510.5	523	535.5	560.5	573	585.5	598	623	635.5	648	673	685.5	698	710.5
4	398	410.5	423	448	460.5	473	485.5	510.5	523	535.5	560.5	573	585.5	598	623	635.5	648	673	685.5	698	710.5	735.5	748	760.5
5	448	460.5	473	485.5	510.5	523	535.5	548	573	585.5	598	623	635.5	648	660.5	685.5	698	710.5	735.5	748	760.5	773	798	810.5
6	485.5	510.5	523	535.5	548	573	585.5	598	623	635.5	648	660.5	685.5	698	710.5	723	748	760.5	773	798	810.5	823	835.5	860.5
7	535.5	548	573	585.5	598	610.5	635.5	648	660.5	685.5	698	710.5	723	748	760.5	773	798	810.5	823	835.5	860.5	873	885.5	898
8	585.5	598	610.5	635.5	648	660.5	673	698	710.5	723	748	760.5	773	785.5	810.5	823	835.5	860.5	873	885.5	898	923	935.5	948
9	635.5	648	660.5	673	698	710.5	723	748	760.5	773	785.5	810.5	823	835.5	848	873	885.5	898	923	935.5	948	960.5	985.5	985.5

Dimensions

(mm)

Power supply with 7/8 inch connector

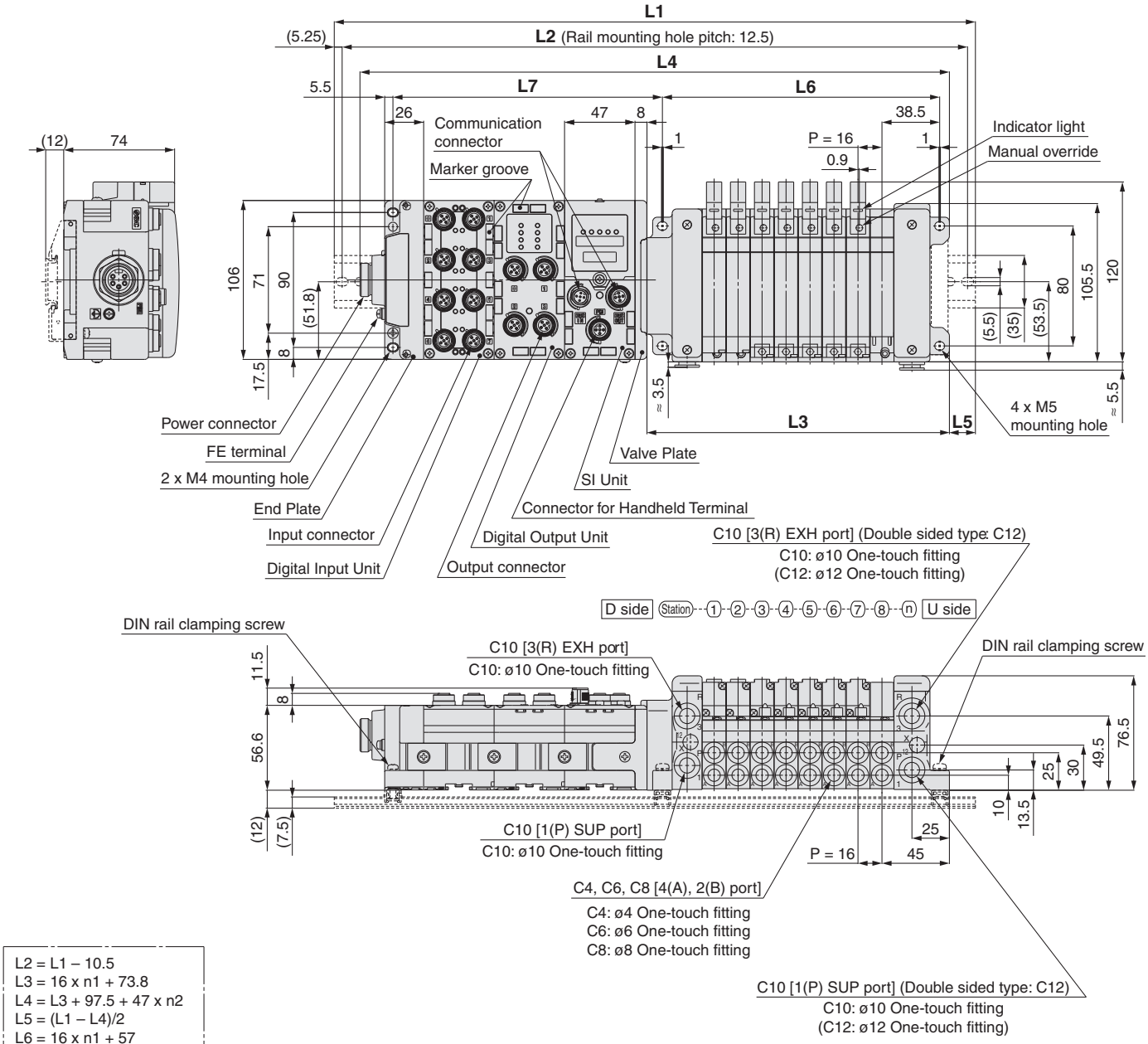

L2 = L1 – 10.5
L3 = 16 x n1 + 73.8
L4 = L3 + 97.5 + 47 x n2
L5 = (L1 – L4)/2
L6 = 16 x n1 + 57
L7 = 47 x n2 + 85.8

L1: DIN Rail Overall Length

(mm)

I/O Unit stations (n2) \ Valve stations (n1)	1	2	3	4	5	6	7	8	9	10	11	12	13	14	15	16	17	18	19	20	21	22	23	24
0	223	235.5	260.5	273	285.5	298	323	335.5	348	373	385.5	398	410.5	435.5	448	460.5	485.5	498	510.5	523	548	560.5	573	585.5
1	273	285.5	298	323	335.5	348	360.5	385.5	398	410.5	435.5	448	460.5	473	498	510.5	523	548	560.5	573	585.5	610.5	623	635.5
2	323	335.5	348	360.5	385.5	398	410.5	435.5	448	460.5	473	498	510.5	523	535.5	560.5	573	585.5	610.5	623	635.5	648	673	685.5
3	360.5	385.5	398	410.5	423	448	460.5	473	498	510.5	523	535.5	560.5	573	585.5	610.5	623	635.5	648	673	685.5	698	710.5	735.5
4	410.5	423	448	460.5	473	485.5	510.5	523	535.5	560.5	573	585.5	598	623	635.5	648	673	685.5	698	710.5	735.5	748	760.5	785.5
5	460.5	473	485.5	510.5	523	535.5	560.5	573	585.5	598	623	635.5	648	660.5	685.5	698	710.5	735.5	748	760.5	773	798	810.5	823
6	510.5	523	535.5	548	573	585.5	598	623	635.5	648	660.5	685.5	698	710.5	735.5	748	760.5	773	798	810.5	823	835.5	860.5	873
7	548	573	585.5	598	610.5	635.5	648	660.5	685.5	698	710.5	723	748	760.5	773	798	810.5	823	835.5	860.5	873	885.5	910.5	923
8	598	610.5	635.5	648	660.5	685.5	698	710.5	723	748	760.5	773	785.5	810.5	823	835.5	860.5	873	885.5	898	923	935.5	948	973
9	648	660.5	673	698	710.5	723	748	760.5	773	785.5	810.5	823	835.5	860.5	873	885.5	898	923	935.5	948	960.5	985.5	985.5	—

For Series EX600

Series VQC4000

How to Order Manifold

VV5QC 4 1 – 16 02 [ ] SD6Q 2 N 1 – [ ]

Series VQC4000

Base mounted plug-in

Stations

Symbol	Stations
01	1 station
⋮	⋮
16 Note)	16 stations

Note) Max. number of stations depends on the wiring specifications.

Cylinder port size

C8	With ø8 One-touch fitting
C10	With ø10 One-touch fitting
C12	With ø12 One-touch fitting
02	1/4
03	3/8
B	Bottom ported 1/4
CM	Mixed sizes

Thread type

Nil	Rc
F	G
T	NPT/NPTF

Kit type

Kit type	Symbol	Specifications	Stations	Max. number of stations for special wiring specifications	Max. number of solenoids
S kit	SD60	Without SI Unit	1 to 12 stations	16 stations	24
	SD6Q	For DeviceNet™			
	SD6N	For PROFIBUS DP			
	SD6V	For CC-Link			
	SD6ZE	For EtherNet/IP™			
	SD6D	For EtherCAT			

Note) Max. number of stations depends on the number of solenoids.
Add the option symbol "-K" when the combination of single wiring and double wiring is specified.

- When "Without SI Unit" is specified, I/O Unit cannot be mounted.
- When "Without SI Unit" is specified, Valve Plate to connect the manifold and SI Unit is not mounted. Refer to page 51 for mounting method.

End Plate type

Nil	No End Plate
2	Power supply with M12 connector (Max. supplied current 2 A)
3	Power supply with 7/8 inch connector (Max. supplied current 8 A)

Note) Without SI Unit, the symbol is nil.

SI Unit common

Nil	Positive common
N	Negative common

Note) Without SI Unit, the symbol is nil.

I/O Unit stations

Nil	None
1	1 station
⋮	⋮
9	9 stations

Note 1) Without SI Unit, the symbol is nil.
Note 2) SI Unit is not included in I/O Unit stations.
Note 3) When I/O Unit is selected, it is shipped separately and assembled by customer. Refer to the attached operation manual for mounting method.
Note 4) Refer to page 50 for details on enclosure.

Option

Nil	None
K Note)	Special wiring specifications (Except double wiring)

Note) When single wiring and double wiring are mixed, specify wiring type of each station on the manifold specification sheet.

Refer to the catalog of each series for details on manifold solenoid valve specifications, Common Precautions and Specific Product Precautions.

How to Order Valves

VQC4 1 0 0 – 5

Series VQC4000

Type of actuation

1	2-position single (A) (B) 4 2 5 1 3 (R1) (P) (R2)
2	2-position double (Metal) (A) (B) 4 2 5 1 3 (R1) (P) (R2)
	2-position double (Rubber) (A) (B) 4 2 5 1 3 (R1) (P) (R2)
3	3-position closed center (A) (B) 4 2 5 1 3 (R1) (P) (R2)
4	3-position exhaust center (A) (B) 4 2 5 1 3 (R1) (P) (R2)
5	3-position pressure center (A) (B) 4 2 5 1 3 (R1) (P) (R2)
6	3-position double check (A) (B) 4 2 5 1 3 (R1) (P) (R2)

Manual override

Nil: Non-locking push type (Tool required)

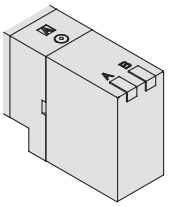

B: Locking type (Tool required)

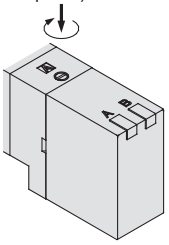

Light/surge voltage suppressor

Nil	With
E	Without light, with surge voltage suppressor

Coil voltage

5	24 VDC

Function

Nil	Standard (1 W)
R	External pilot
Y Note 2)	Low wattage type (0.5 W)

Note 1) When two or more symbols are specified, indicate them alphabetically.
Note 2) Suitable for continuously energizing for long periods of time.

Seal type

0	Metal seal
1	Rubber seal

Dimensions

(mm)

Power supply with M12 connector

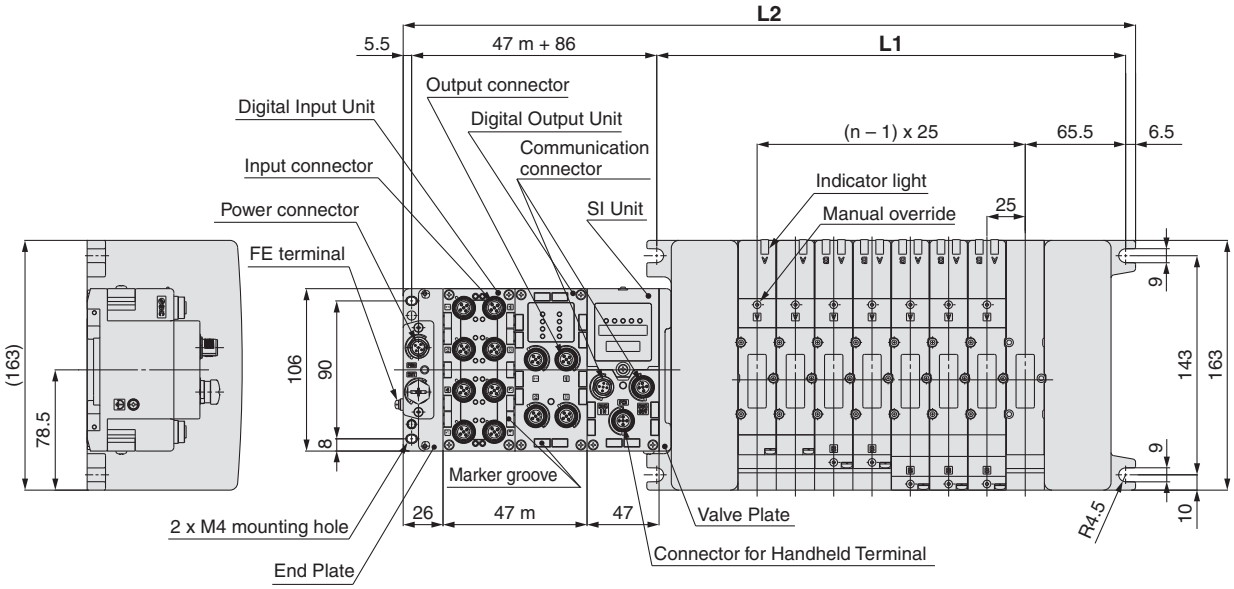

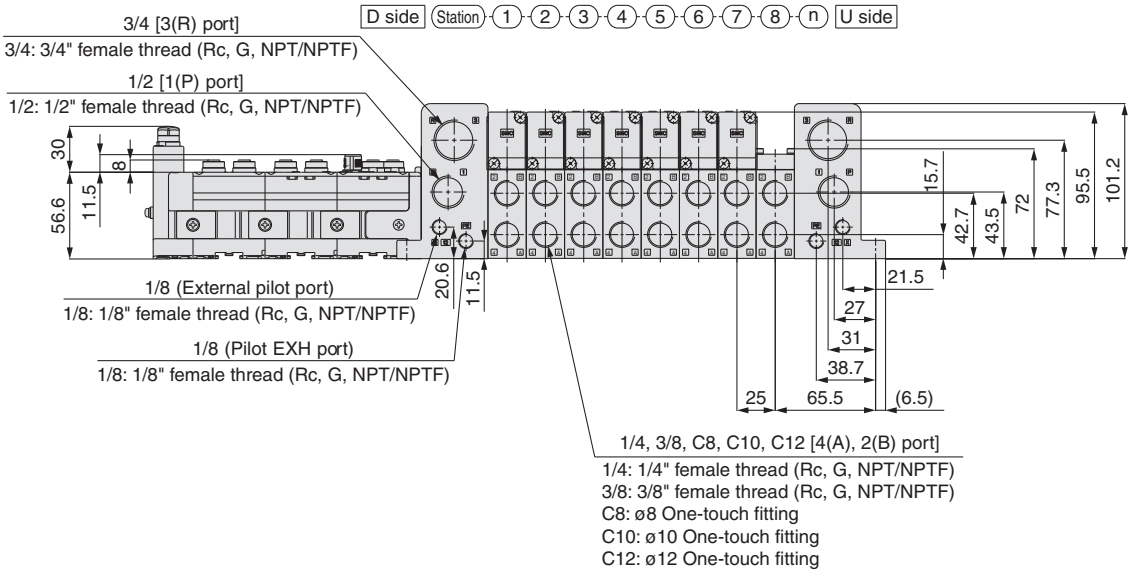

Formulas
L1 = 25n + 106
L2 = 25n + 184
∗ L2 is the dimension without I/O Unit. Add 47 mm for each additional I/O Unit s.
∗ “m” is number of I/O Units.

Dimensions

n: Stations (Maximum 16 stations) (mm)

L \ n	1	2	3	4	5	6	7	8	9	10	11	12	13	14	15	16
L1	131	156	181	206	231	256	281	306	331	356	381	406	431	456	481	506
L2	209	234	259	284	309	334	359	384	409	434	459	484	509	534	559	584

Dimensions

(mm)

Power supply with 7/8 inch connector

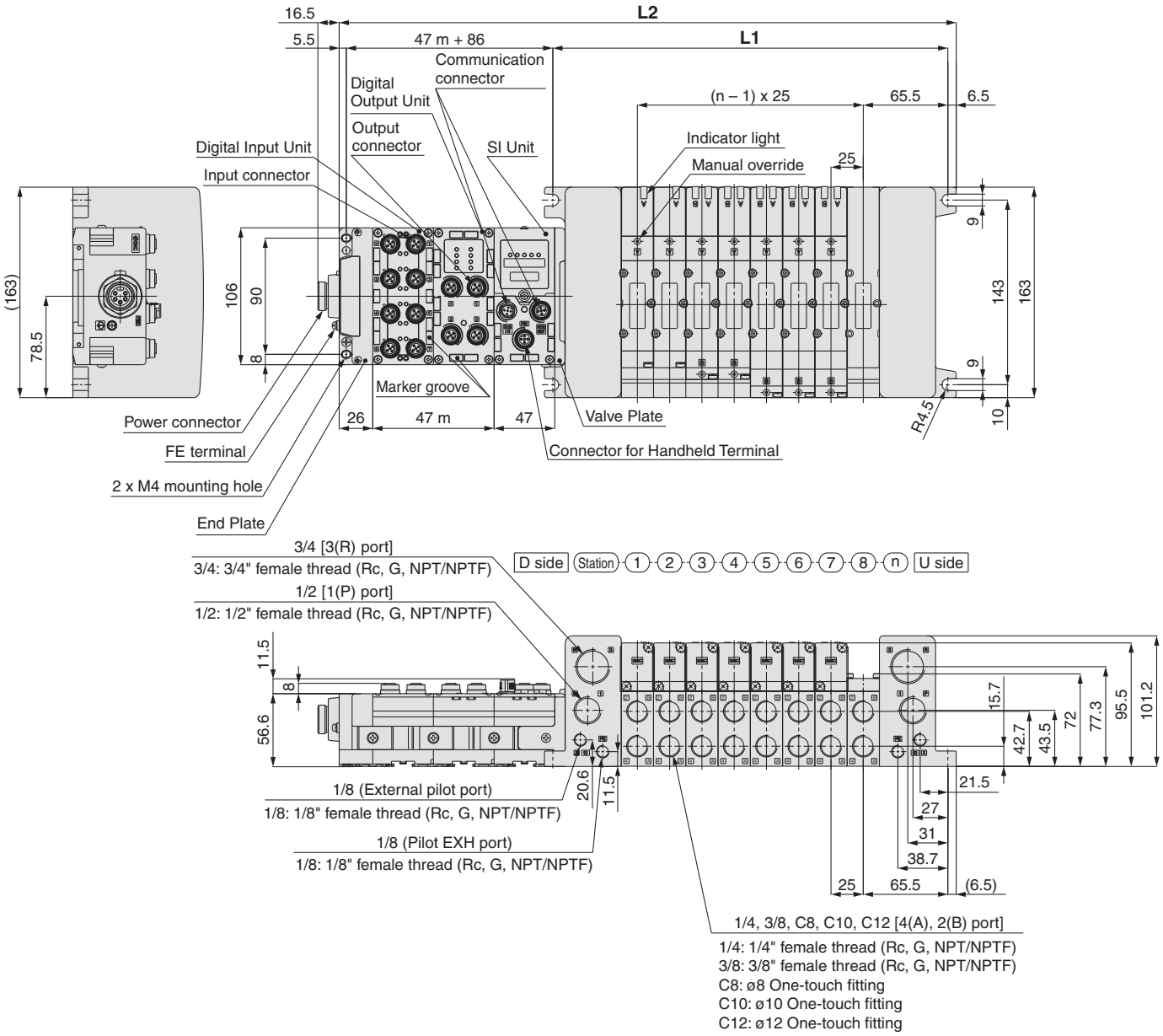

Formulas
L1 = 25n + 106
L2 = 25n + 184
∗ L2 is the dimension without I/O Unit. Add 47 mm for each additional I/O Unit s.
∗ "m" is number of I/O Units.

Dimensions

n: Stations (Maximum 16 stations) (mm)

L \ n	1	2	3	4	5	6	7	8	9	10	11	12	13	14	15	16
L1	131	156	181	206	231	256	281	306	331	356	381	406	431	456	481	506
L2	209	234	259	284	309	334	359	384	409	434	459	484	509	534	559	584

Series EX600
Specific Product Precautions 1

Be sure to read this before handling. Refer to back cover for Safety Instructions, "Handling Precautions for SMC Products" (M-E03-3) and "Operation Manual" for 3/4/5 Port Solenoid Valve Precautions. The Operation Manual can be downloaded from the SMC website, http://www.smcworld.com

Design/Selection

⚠ Warning

1. Use this product within the specification range.
Using beyond the specified specifications range can cause fire, malfunction, or damage to the system.
Check the specifications before operation.

2. When using for an interlock circuit:
- **Provide a multiple interlock system which is operated by another system (such as mechanical protection function).**
- **Perform an inspection to confirm that it is working properly.**

This may cause possible injury due to malfunction.

⚠ Caution

1. When applicable to UL, use a Class 2 power supply unit conforming to UL1310 for direct current power supply.

2. Use this product within the specified voltage range.
Using beyond the specified voltage range is likely to cause the units and connecting devices to be damaged or to malfunction.

3. The power supply for the unit should be 0 V as the standard for both power supply for output as well as power supply for control/input.

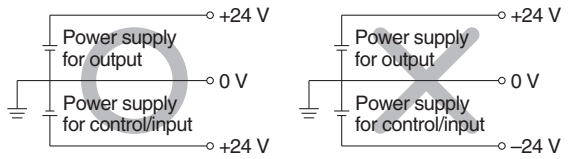

4. Do not install a unit in a place where it can be used as a foothold.
Applying any excessive load such as stepping on the unit by mistake or placing a foot on it, will cause it to break.

5. Keep the surrounding space free for maintenance.
When designing a system, take into consideration the amount of free space needed for performing maintenance.

6. Do not remove the name plate.
Improper maintenance or incorrect use of operation manual can cause failure and malfunction. Also, there is a ri sk of losing conformity with safety standards.

7. Beware of inrush current when the power supply is turned on.
Some connected loads can apply an initial charge current which will trigger the over current protection function, causing the unit to malfunction.

Mounting

⚠ Caution

1. When handling and assembling units:
- **Do not touch the sharp metal parts of the connector or plug.**
- **Do not apply excessive force to the unit when disassembling.**
  The connecting portions of the unit are firmly joined with seals.
- **When joining units, take care not to get fingers caught between units.**
  Injury can result.

Mounting

⚠ Caution

2. Do not drop, bump, or apply excessive impact.
Otherwise, the unit can become damaged, malfunction, or fail to function.

3. Observe the tightening torque range.
Tightening outside of the allowable torque range will likely damage the screw.
IP67 cannot be guaranteed if the screws are not tightened to the specified torque.

4. When lifting a large size manifold solenoid valve unit, take care to avoid causing stress to the valve connection joint.
The connection parts of the unit may be damaged.
Because the unit may be heavy, carrying and installation should be performed by more than one operator to avoid strain or injury.

5. When placing a manifold, mount it on a flat surface.
Torsion in the whole manifold can lead to trouble such as air leakage or defective insulation.

Wiring

⚠ Caution

1. Check the grounding to maintain the safety of the reduced wiring system and for anti-noise performance.
Provide a specific grounding as close to the unit as possible to minimize the distance to grounding.

2. Avoid repeatedly bending or stretching the cable and applying a heavy object or force to it.
Wiring applying repeated bending and tensile stress to the cable can break the circuit.

3. Avoid miswiring.
If miswired, there is a danger of malfunction or damage to the reduced wiring system.

4. Do not wire while energizing the product.
There is a danger of malfunction or damage to the reduced wiring system or input/output device.

5. Avoid wiring the power line and high pressure line in parallel.
Noise or surge produced by signal line resulting from the power line or high pressure line could cause malfunction.
Wiring of the reduced wiring system or input/output device and the power line or high pressure line should be separated from each other.

6. Check the wiring insulation.
Defective insulation (contact with other circuits, improper insulation between terminals, etc.) may cause damage to the reduced wiring system or input/output device due to excessive voltage or current.

Specific Product Precautions 2

Be sure to read this before handling. Refer to back cover for Safety Instructions, "Handling Precautions for SMC Products" (M-E03-3) and "Operation Manual" for 3/4/5 Port Solenoid Valve Precautions. The Operation Manual can be downloaded from the SMC website, http://www.smcworld.com

Wiring

⚠ Caution

7. When a reduced wiring system is installed in machinery/equipment, provide adequate protection against noise by using noise filters, etc.

Noise in signal lines may cause malfunction.

8. When connecting wires of input/output device or Handheld Terminal, prevent water, solvent or oil from entering inside from the connecter section.

This can cause damage, equipment failure or malfunction.

9. Avoid wiring patterns in which excessive stress is applied to the connector.

This may cause malfunction or damage to the unit due to contact failure.

Operating Environment

⚠ Warning

1. Do not use in an atmosphere containing an inflammable gas or explosive gas.

Use in such an atmosphere is likely to cause a fire or explosion. This system is not explosion-proof.

⚠ Caution

1. Select the proper type of enclosure according to the environment of operation.

IP65/67 is achieved when the following conditions are met.

1) Provide appropriate wiring between all units using electrical wiring cables, communication connectors and cables with M12 connectors.

2) Suitable mounting of each unit and manifold valve.

3) Be sure to mount a seal cap on any unused connectors.

If using in an environment that is exposed to water splashes, please take measures such as using a cover.
When the enclosure is IP40, do not use in an operating environment or atmosphere where it may come in contact with corrosive gas, chemical agents, seawater, water, or water vapor. When connected to the EX600-D□□E or EX600-D□□F, manifold enclosure is IP40.
Also, the Handheld Terminal conforms to IP20, so prevent foreign matter from entering inside, and water, solvent or oil from coming in direct contact with it.

2. Provide adequate protection when operating in locations such as the following.

Failure to do so may cause damage or malfunction.
The effect of countermeasures should be checked in individual equipment and machine.

1) Where noise is generated by static electricity, etc.

2) Where there is a strong electric field

3) Where there is a danger of exposure to radiation

4) When in close proximity to power supply lines

Operating Environment

⚠ Caution

3. Do not use in an environment where oil and chemicals are used.

Operating in environments with coolants, cleaning solvents, various oils or chemicals may cause adverse effects (damage, malfunction) to the unit even in a short period of time.

4. Do not use in an environment where the product could be exposed to corrosive gas or liquid.

This may damage the unit and cause it to malfunction.

5. Do not use in locations with sources of surge generation.

Installation of the unit in an area around the equipment (electromagnetic lifters, high frequency induction furnaces, welding machine, motors, etc.), which generates the large surge voltage could cause to deteriorate an internal circuitry element of the unit or result in damage. Implement countermeasures against the surge from the generating source, and avoid touching the lines with each other.

6. Use the product type that has an integrated surge absorption element when directly driving a load which generates surge voltage by relay, solenoid valves or lamp.

When a surge generating load is directly driven, the unit may be damaged.

7. The product is CE marked, but not immune to lightning strikes. Take measures against lightning strikes in your system.

8. Keep dust, wire scraps and other extraneous material from getting inside the product.

This may cause malfunction or damage.

9. Mount the unit in such locations, where no vibration or shock is affected.

This may cause malfunction or damage.

10. Do not use in places where there are cyclic temperature changes.

In case that the cyclic temperature is beyond normal temperature changes, the internal unit is likely to be adversely effected.

11. Do not use in direct sunlight.

Do not use in direct sunlight. It may cause malfunction or damage.

12. Use this product within the specified ambient temperature range.

This may cause malfunction.

13. Do not use in places where there is radiated heat around it.

Such a place is likely to cause malfunction.

Series EX600
Specific Product Precautions 3

Be sure to read this before handling. Refer to back cover for Safety Instructions, "Handling Precautions for SMC Products" (M-E03-3) and "Operation Manual" for 3/4/5 Port Solenoid Valve Precautions. The Operation Manual can be downloaded from the SMC website, http://www.smcworld.com

Adjustment/Operation

⚠ Warning

1. Do not perform operation or setting with wet hands.
There is a risk of electrical shock.

<Handheld Terminal>

2. Do not apply pressure to the LCD.
There is a possibility of the crack of LCD and injuring.

3. The forced input/output function is used to change the signal status forcibly. When operating this function, be sure to check the safety of the surroundings and installation.
Otherwise, injury or equipment damage could result.

4. Incorrect setting of parameters can cause malfunction. Be sure to check the settings before use.
This may cause injury or equipment damage.

⚠ Caution

1. Use a watchmakers' screwdriver with thin blade for the setting of each switch of the SI Unit.
When setting the switch, do not touch other unrelated parts.
This may cause parts damage or malfunction due to a short circuit.

2. Provide adequate setting for the operating conditions.
Failure to do so could result in malfunction.
Refer to the operation manual for setting of the switches.

3. For details on programming and address setting, refer to the manual from the PLC manufacturer.
The content of programming related to protocol is designed by the manufacturer of the PLC used.

<Handheld Terminal>

4. Do not press the setting buttons with a sharp pointed object.
This may cause damage or malfunction.

5. Do not apply excessive load and impact to the setting buttons.
This may cause damage, equipment failure or malfunction.

When the order does not include the SI Unit, the Valve Plate to connect the manifold and SI Unit is not mounted. Use attached valve fixing screws and mount the Valve Plate.
(Tightening torque: 0.6 to 0.7 N·m)

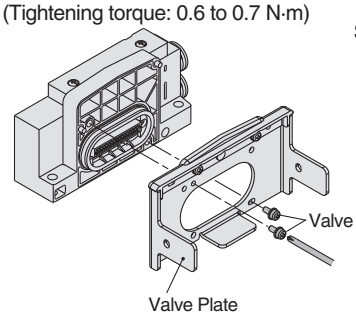

Screw tightened parts
Series SV: 2 places
Series S0700: 2 places
Series VQC1000: 2 places
Series VQC2000: 3 places
Series VQC4000: 4 places
Series SY: 2 places

Maintenance

⚠ Warning

1. Do not disassemble, modify (including circuit board replacement) or repair this product.
Such actions are likely to cause injuries or breakage.

2. When an inspection is performed,
- **Turn off the power supply.**
- **Stop the air supply, exhaust the residual pressure in piping and verify that the air is released before performing maintenance work.**
  Unexpected malfunction of system components and injury can result.

⚠ Caution

1. When handling and replacing the unit:
- **Do not touch the sharp metal parts of the connector or plug.**
- **Do not apply excessive force to the unit when disassembling.**
  The connecting portions of the unit are firmly joined with seals.
- **When joining units, take care not to get fingers caught between units.**
  Injury can result.

2. Perform periodic inspection.
Unexpected malfunction in th e system composition devices is likely to occur due to malfunction of machinery or equipment.

3. After maintenance, make sure to perform an appropriate functionality inspection.
In cases of abnormality such as faulty operation, stop operation. Unexpected malfunction in th e system composition devices is likely to occur.

4. Do not use benzene and thinner for cleaning units.
Damage to the surface or erasure of the display can result. Wipe off any stains with a soft cloth.
If the stain is persistent, wipe off with a cloth soaked in a dilute solution of neutral detergent and wrung out tightly, and then finish with a dry cloth.

Other

⚠ Caution

1. Refer to the catalog of each series for Common Precautions and Specific Product Precautions on manifold solenoid valves.

◆■ Trademark
DeviceNet™ is a trademark of ODVA.
EtherNet/IP™ is a trademark of ODVA.
EtherCAT® is registered trademark and patented technology, licensed by Beckhoff Automation GmbH, Germany.

⚠ Safety Instructions

These safety instructions are intended to prevent hazardous situations and/or equipment damage. These instructions indicate the level of potential hazard with the labels of **"Caution," "Warning"** or **"Danger."** They are all important notes for safety and must be followed in addition to International Standards (ISO/IEC)*1), and other safety regulations.

⚠ Caution: **Caution** indicates a hazard with a low level of risk which, if not avoided, could result in minor or moderate injury.

⚠ Warning: **Warning** indicates a hazard with a medium level of risk which, if not avoided, could result in death or serious injury.

⚠ Danger : **Danger** indicates a hazard with a high level of risk which, if not avoided, will result in death or serious injury.

*1) ISO 4414: Pneumatic fluid power – General rules relating to systems.
ISO 4413: Hydraulic fluid power – General rules relating to systems.
IEC 60204-1: Safety of machinery – Electrical equipment of machines.
(Part 1: General requirements)
ISO 10218-1: Manipulating industrial robots - Safety.
etc.

⚠ Warning

1. **The compatibility of the product is the responsibility of the person who designs the equipment or decides its specifications.**
   Since the product specified here is used under various operating conditions, its compatibility with specific equipment must be decided by the person who designs the equipment or decides its specifications based on necessary analysis and test results. The expected performance and safety assurance of the equipment will be the responsibility of the person who has determined its compatibility with the product. This person should also continuously review all specifications of the product referring to its latest catalog information, with a view to giving due consideration to any possibility of equipment failure when configuring the equipment.
2. **Only personnel with appropriate training should operate machinery and equipment.**
   The product specified here may become unsafe if handled incorrectly. The assembly, operation and maintenance of machines or equipment including our products must be performed by an operator who is appropriately trained and experienced.
3. **Do not service or attempt to remove product and machinery/equipment until safety is confirmed.**
   1. The inspection and maintenance of machinery/equipment should only be performed after measures to prevent falling or runaway of the driven objects have been confirmed.
   2. When the product is to be removed, confirm that the safety measures as mentioned above are implemented and the power from any appropriate source is cut, and read and understand the specific product precautions of all relevant products carefully.
   3. Before machinery/equipment is restarted, take measures to prevent unexpected operation and malfunction.
4. **Contact SMC beforehand and take special consideration of safety measures if the product is to be used in any of the following conditions.**
   1. Conditions and environments outside of the given specifications, or use outdoors or in a place exposed to direct sunlight.
   2. Installation on equipment in conjunction with atomic energy, railways, air navigation, space, shipping, vehicles, military, medical treatment, combustion and recreation, or equipment in contact with food and beverages, emergency stop circuits, clutch and brake circuits in press applications, safety equipment or other applications unsuitable for the standard specifications described in the product catalog.
   3. An application which could have negative effects on people, property, or animals requiring special safety analysis.
   4. Use in an interlock circuit, which requires the provision of double interlock for possible failure by using a mechanical protective function, and periodical checks to confirm proper operation.

⚠ Caution

1. **The product is provided for use in manufacturing industries.**
   The product herein described is basically provided for peaceful use in manufacturing industries.
   If considering using the product in other industries, consult SMC beforehand and exchange specifications or a contract if necessary.
   If anything is unclear, contact your nearest sales branch.

Limited warranty and Disclaimer/ Compliance Requirements

The product used is subject to the following "Limited warranty and Disclaimer" and "Compliance Requirements".
Read and accept them before using the product.

Limited warranty and Disclaimer

1. The warranty period of the product is 1 year in service or 1.5 years after the product is delivered.*2)
   Also, the product may have specified durability, running distance or replacement parts. Please consult your nearest sales branch.
2. For any failure or damage reported within the warranty period which is clearly our responsibility, a replacement product or necessary parts will be provided.
   This limited warranty applies only to our product independently, and not to any other damage incurred due to the failure of the product.
3. Prior to using SMC products, please read and understand the warranty terms and disclaimers noted in the specified catalog for the particular products.

   ***2) Vacuum pads are excluded from this 1 year warranty.**
   A vacuum pad is a consumable part, so it is warranted for a year after it is delivered.
   Also, even within the warranty period, the wear of a product due to the use of the vacuum pad or failure due to the deterioration of rubber material are not covered by the limited warranty.

Compliance Requirements

1. The use of SMC products with production equipment for the manufacture of weapons of mass destruction (WMD) or any other weapon is strictly prohibited.
2. The exports of SMC products or technology from one country to another are governed by the relevant security laws and regulations of the countries involved in the transaction. Prior to the shipment of a SMC product to another country, assure that all local rules governing that export are known and followed.

Revision history

Edition B	* EtherNet/IP™ communication protocol added.	
	* Analog Output Unit and Input/Output Unit added.	
	* D-sub connector and spring type terminal block added.	
	* Applicable solenoid valve SY3000/5000 series added.	
	* Number of pages decreased from 64 to 60.	OW
Edition C	* EtherCAT communication protocol added.	PX

⚠ Safety	Be sure to read "Handling Precautions for SMC Products" (M-E03-3) before using.

Global Manufacturing, Distribution and Service Network

Worldwide Subsidiaries

North & South America

- U.S.A. **SMC Corporation of America**
- CANADA **SMC Pneumatics (Canada) Ltd.**
- MEXICO **SMC Corporation(México), S.A. de C.V.**
- BRAZIL **SMC Pneumáticos do Brasil Ltda.**
- CHILE **SMC Pneumatics (Chile) S.A.**
- COLOMBIA **SMC Colombia Sucursal de SMC Chile S.A.**
- ARGENTINA **SMC Argentina S.A.**
- BOLIVIA **SMC Pneumatics Bolivia S.r.l.**
- VENEZUELA **SMC Neumatica Venezuela S.A.**
- PERU (Distributor) **IMPECO Automatización Industrial S.A.C.**
- ECUADOR (Distributor) **ASSISTECH CIA. LTDA.**

Asia/Oceania

- CHINA **SMC(China)Co.,Ltd.**
- CHINA **SMC Pneumatics (Guangzhou) Ltd.**
- HONG KONG **SMC Pneumatics(Hong Kong)Ltd.**
- TAIWAN **SMC Pneumatics(Taiwan)Co.,Ltd.**
- KOREA **SMC Pneumatics Korea Co., Ltd.**
- SINGAPORE **SMC Pneumatics(S.E.A.)Pte.Ltd.**
- MALAYSIA **SMC Pneumatics(S.E.A.)Sdn.Bhd.**
- THAILAND **SMC (Thailand) Ltd.**
- PHILIPPINES **Shoketsu SMC Corporation**
- INDIA **SMC Pneumatics(India)Pvt.Ltd.**
- ISRAEL (Distributor) **Baccara Geva A.C.S. Ltd.**
- INDONESIA (Distributor) **PT. Sinar Mutiara Cemerlang**
- VIETNAM (Distributor) **Dy Dan Trading Co.,Ltd.**
- PAKISTAN (Distributor) **Jubilee Corporation**

Asia/Oceania

- SRI LANKA (Distributor) **Electro-Serv(Pvt.)Ltd.**
- IRAN (Distributor) **Abzarchian Co. Ltd.**
- U.A.E. (Distributor) **Machinery People Trading Co. L.L.C.**
- KUWAIT (Distributor) **Esco Kuwait Equip & Petroleum App. Est.**
- SAUDI ARABIA (Distributor) **Assaggaff Trading Est.**
- BAHRAIN (Distributor) **Mohammed Jalal & Sons W.L.L. Technical & Automative Services**
- SYRIA (Distributor) **Miak Corporation**
- JORDAN (Distributor) **Atafawok Trading Est.**
- BANGLADESH (Distributor) **Chemie International**
- AUSTRALIA **SMC Pneumatics(Australia)Pty.Ltd.**
- NEW ZEALAND **SMC Pneumatics(N.Z.)Ltd.**
- JAPAN **SMC Corporation**

Europe/Africa

- GERMANY **SMC Pneumatik GmbH**
- SWITZERLAND **SMC Pneumatik AG**
- U.K. **SMC Pneumatics (U.K.) Ltd.**
- FRANCE **SMC Pneumatique SA**
- SPAIN / PORTUGAL **SMC España S.A.**
- ITALY **SMC Italia S.p.A.**
- GREECE **SMC HELLAS E.P.E**
- IRELAND **SMC Pneumatics (Ireland) Ltd.**
- NETHERLANDS (Associated company) **SMC Pneumatics BV**
- BELGIUM (Associated company) **SMC Pneumatics N.V./S.A.**
- DENMARK **SMC Pneumatik A/S**
- AUSTRIA **SMC Pneumatik GmbH (Austria)**

Europe/Africa

- CZECH REPUBLIC **SMC Industrial Automation CZ s.r.o.**
- HUNGARY **SMC Hungary Ipari Automatizálási Kft.**
- POLAND **SMC Industrial Automation Polska Sp. z o.o.**
- SLOVAKIA **SMC Priemyselná Automatizácia Spol s.r.o.**
- SLOVENIA **SMC Industrijska Avtomatika d.o.o.**
- BULGARIA **SMC Industrial Automation Bulgaria EOOD**
- CROATIA **SMC Industrijska Automatika d.o.o.**
- BOSNIA AND HERZEGOVINA(Distributor) **A.M. Pneumatik d.o.o.**
- SERBIA(Distributor) **Best Pneumatics d.o.o.**
- UKRAINE(Distributor) **PNEUMOTEC Corp.**
- FINLAND **SMC Pneumatics Finland Oy**
- NORWAY **SMC Pneumatics Norway AS**
- SWEDEN **SMC Pneumatics Sweden AB**
- ESTONIA **SMC Pneumatics Estonia Oü**
- LATVIA **SMC Pneumatics Latvia SIA**
- LITHUANIA(LIETUVA) **UAB "SMC Pneumatics"**
- ROMANIA **SMC Romania S.r.l.**
- RUSSIA **SMC Pneumatik LLC.**
- KAZAKHSTAN **SMC Kazakhstan, LLC.**
- TURKEY (Distributor) **Entek Pnömatik Sanayi ve. Ticaret Şirketi**
- MOROCCO (Distributor) **Soraflex**
- TUNISIA (Distributor) **Byms**
- EGYPT (Distributor) **Saadani Trading & Industrial Services**
- NIGERIA (Distributor) **Faraday Engineering Company Ltd.**
- SOUTH AFRICA (Distributor) **Hyflo Southern Africa (Pty.) Ltd.**

U.S. & Canadian Sales Offices

WEST

- Austin
- Dallas
- Los Angeles
- Phoenix
- Portland
- San Francisco
- Vancouver

CENTRAL

- Chicago
- Cincinnati
- Cleveland
- Detroit
- Indianapolis
- Milwaukee
- Minneapolis
- St. Louis
- Toronto
- Windsor

EAST

- Atlanta
- Birmingham
- Boston
- Charlotte
- Nashville
- New Jersey
- Richmond
- Rochester
- Tampa
- Montreal

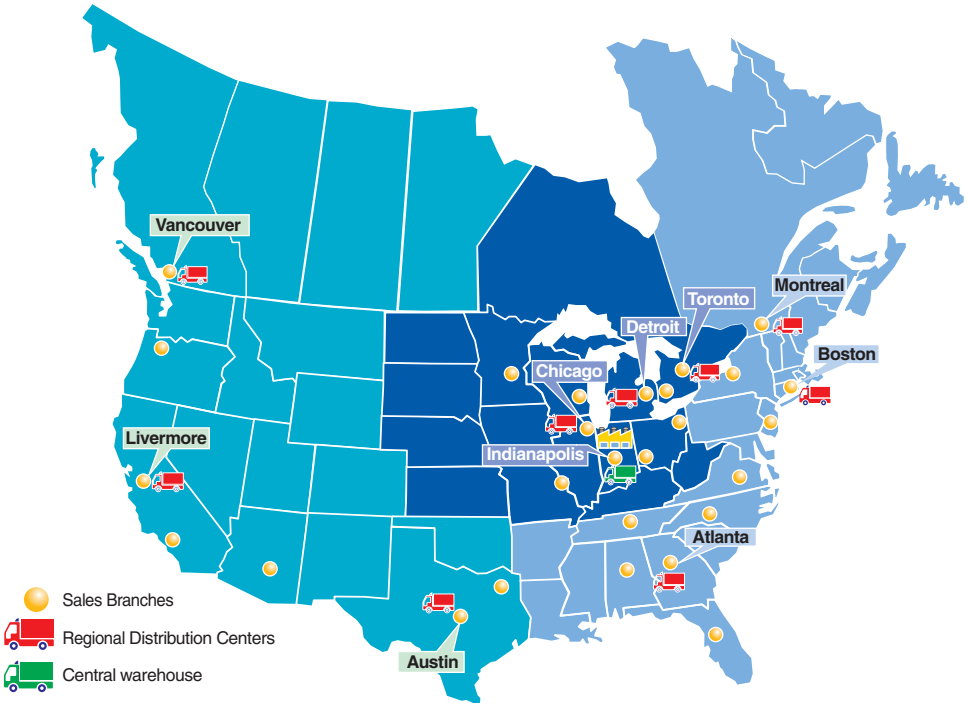

SMC Corporation of America
10100 SMC Blvd., Noblesville, IN 46060
www.smcusa.com
SMC Pneumatics (Canada) Ltd.
www.smcpneumatics.ca
(800) SMC.SMC1 (762-7621)
e-mail: sales@smcusa.com
For International inquires: www.smcworld.com

PY-10M-RRD