Data Sheet

HCPL-9000/-0900, -9030/-0930, HCPL-9031/-0931, -900J/-090J, HCPL-901J/-091J, -902J/-092J

High-Speed Digital Isolators

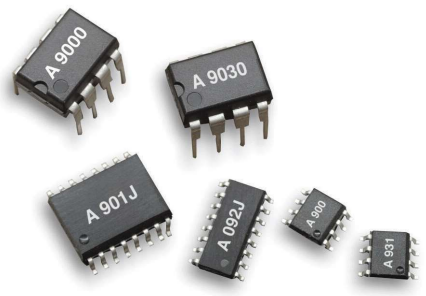

Description

The Broadcom® HCPL-90xx and HCPL-09xx CMOS digital isolators feature high speed performance and excellent transient immunity specifications. The symmetric magnetic coupling barrier gives these devices a typical pulse width distortion of 2 ns, a typical propagation delay skew of 4 ns and 100 Mbaud data rate, making them the industry's fastest digital isolators.

The single-channel digital isolators (HCPL-9000/-0900) feature an active-low logic output enable. The dual-channel digital isolators are configured as unidirectional (HCPL-9030/-0930) and bidirectional (HCPL-9031/-0931), operating in full-duplex mode, making them ideal for digital fieldbus applications.

The quad-channel digital isolators are configured as unidirectional (HCPL-900J/-090J), two channels in one direction and two channels in opposite direction (HCPL-901J/-091J), and one channel in one direction and three channels in opposite direction (HCPL-902J/-092J). This high channel density makes them ideally suited to isolating data conversion devices, parallel buses, and peripheral interfaces.

They are available in 8-pin PDIP, 8-pin Gull Wing, 8-pin SOIC packages, and 16-pin SOIC narrow-body and wide-body packages. They are specified over the temperature range of –40°C to +100°C.

Features

- +3.3V and +5V TTL/CMOS compatible
- 3 ns max. pulse width distortion
- 6 ns max. propagation delay skew
- 15 ns max. propagation delay
- High speed: 100 MBd
- 15 kV/µs min. common mode rejection
- Tri-state output (HCPL-9000/-0900)
- 2500V RMS isolation
- UL1577 approved

Applications

- Digital fieldbus isolation
- Multiplexed data transmission
- Computer peripheral interface
- High-speed digital systems
- Isolated data interfaces
- Logic level shifting

CAUTION! Take normal static precautions in handling and assembly of this component to prevent damage and/or degradation which may be induced by ESD. The components featured in this data sheet are not to be used in military or aerospace applications or environments.

Selection Guide

Device Number	Channel Configuration	Package
HCPL-9000	Single	8-pin DIP (300 Mil)
HCPL-0900	Single	8-pin Small Outline
HCPL-9030	Dual	8-pin DIP (300 Mil)
HCPL-0930	Dual	8-pin Small Outline
HCPL-9031	Dual, Bidirectional	8-pin DIP (300 Mil)
HCPL-0931	Dual, Bidirectional	8-pin Small Outline
HCPL-900J	Quad	16-pin Small Outline, Wide Body
HCPL-090J	Quad	16-pin Small Outline, Narrow Body
HCPL-901J	Quad, 2/2, Bidirectional	16-pin Small Outline, Wide Body
HCPL-091J	Quad, 2/2, Bidirectional	16-pin Small Outline, Narrow Body
HCPL-902J	Quad, 1/3, Bidirectional	16-pin Small Outline, Wide Body
HCPL-092J	Quad, 1/3, Bidirectional	16-pin Small Outline, Narrow Body

Ordering Information

HCPL-09xx and HCPL-90xx are UL Recognized with 2500 V_{rms} for 1 minute per UL1577.

Part Number	Option RoHS Compliant	Package	Surface Mount	Gull Wing	Tape and Reel	Quantity
HCPL-9000	-000E	300 mil DIP-8				50 per tube
HCPL-9030	-300E		X	X		50 per tube
HCPL-9031	-500E		X	X	X	1000 per reel
HCPL-0900	-000E	SO-8	X			100 per tube
HCPL-0930 HCPL-0931	-500E		X		X	1500 per reel
HCPL-900J	-000E	Wide Body SO-16	X			50 per tube
HCPL-901J HCPL-902J	-500E		X		X	1000 per reel
HCPL-090J	-000E	Narrow Body SO-16	X			50 per tube
HCPL-091J HCPL-092J	-500E		X		X	1000 per reel

To order, choose a part number from the part number column and combine with the desired option from the option column to form an order entry.

Example 1:

HCPL-9031-500E to order product of 300-mil DIP Gull Wing Surface-Mount package in Tape and Reel in RoHS compliant.

Option data sheets are available. Contact your Broadcom sales representative or authorized distributor for information.

Pin Descriptions

Symbol	Description
V_{DD1}	Power Supply 1
V_{DD2}	Power Supply 2
IN_X	Logic Input Signal
OUT_X	Logic Output Signal
GND_1	Power Supply Ground 1
GND_2	Power Supply Ground 2
V_{OE}	Logic Output Enable (Single Channel), Active Low
NC	Not Connected

Functional Diagrams

Single Channel

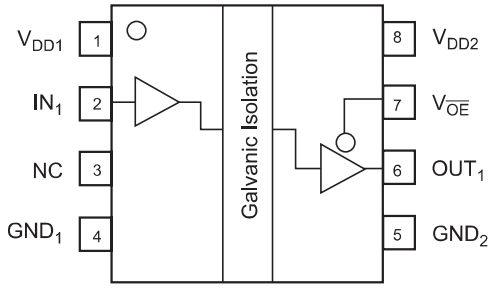

HCPL-9000/0900

Truth Table

IN_1	V_{OE}	OUT_1
L	L	L
H	L	H
L	H	Z
H	H	Z

Dual Channel

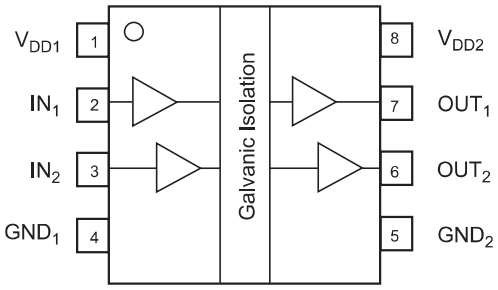

HCPL-9030/0930

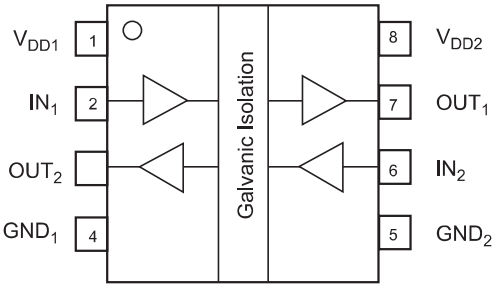

HCPL-9031/0931

Quad Channel

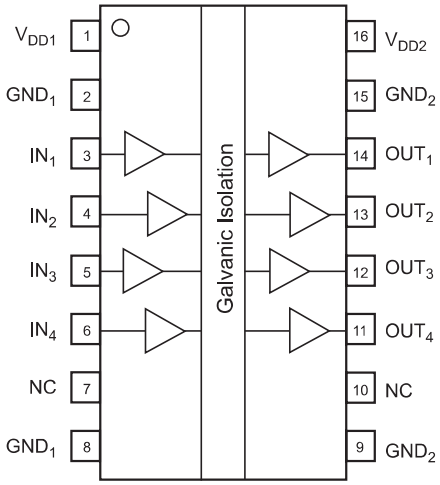

HCPL-900J/-090J

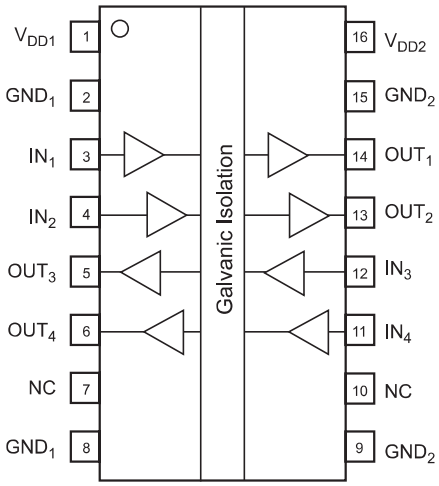

HCPL-901J/-091J

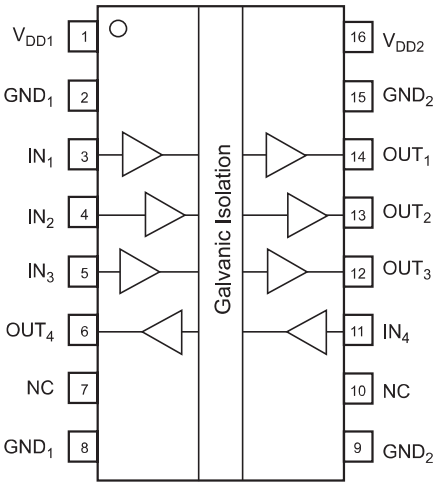

HCPL-902J/-092J

Package Outline Drawings

HCPL-9000, HCPL-9030, and HCPL-9031 Standard DIP Packages

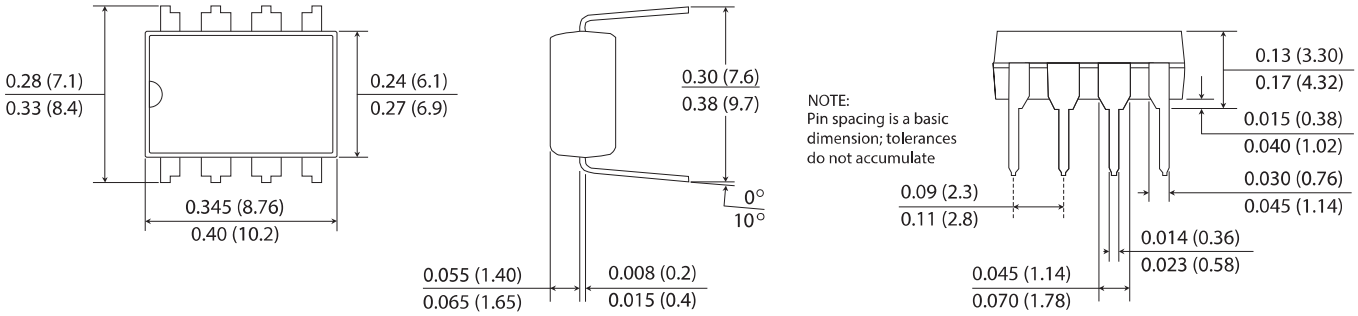

Dimensions: inches (mm); scale = approx. 2.5X

HCPL-9000, HCPL-9030, and HCPL-9031 Gull Wing Surface-Mount Option 300

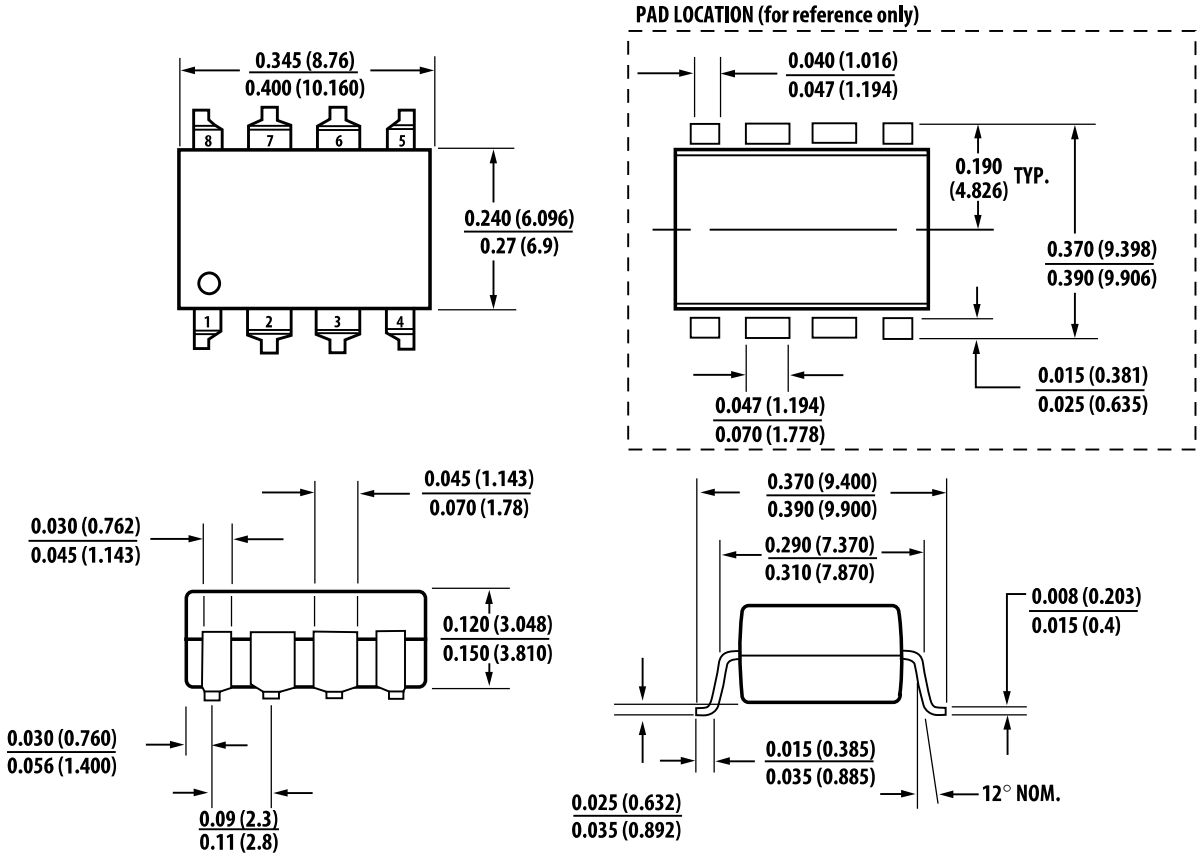

DIMENSIONS INCHES (MILLIMETERS) $\frac{\text{MIN}}{\text{MAX}}$

LEAD COPLANARITY = 0.004 INCHES (0.10 mm)

HCPL-0900, HCPL-0930, and HCPL-0931 Small Outline SO-8 Package

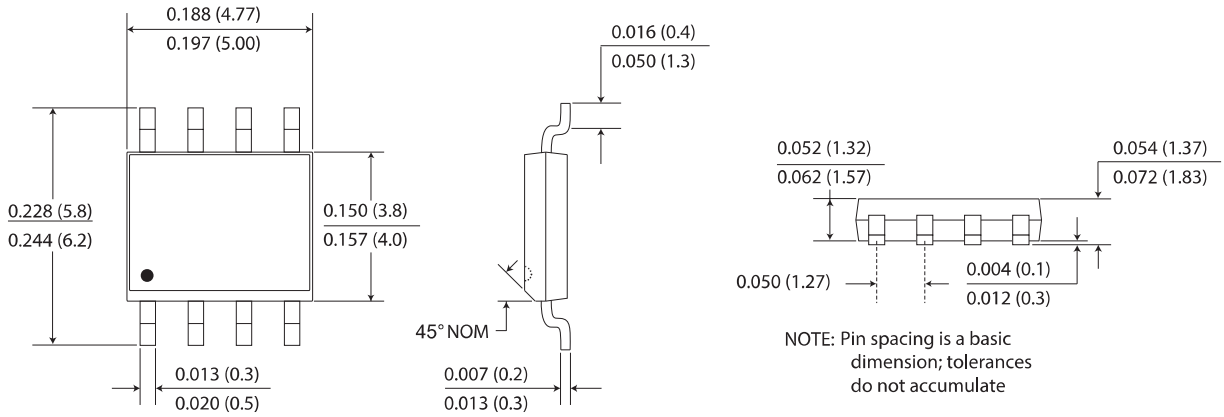

NOTE: Pin spacing is a basic dimension; tolerances do not accumulate

Dimensions: inches (mm); scale = approx. 5X

Pad Layout

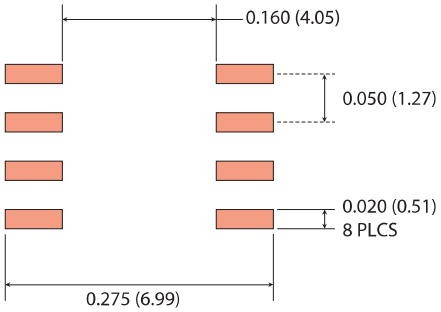

Dimensions: inches (mm); scale = approx. 5X

HCPL-900J, HCPL-901J, and HCPL-902J Wide Body SOIC-16 Package

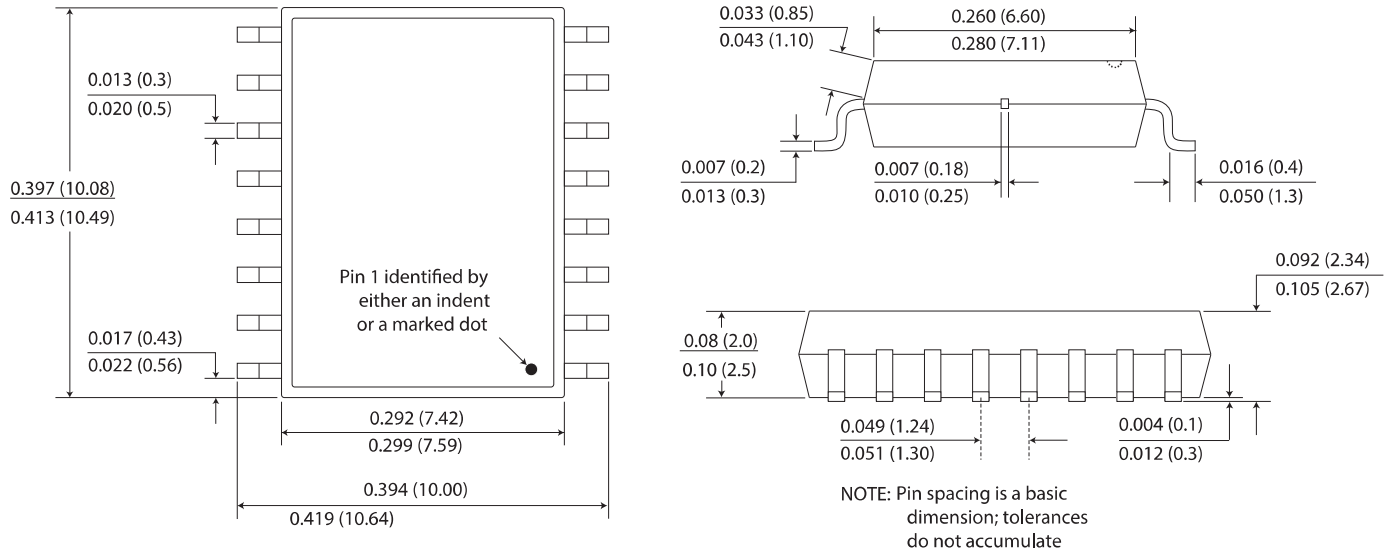

Dimensions: inches (mm); scale = approx. 5X

Pad Layout

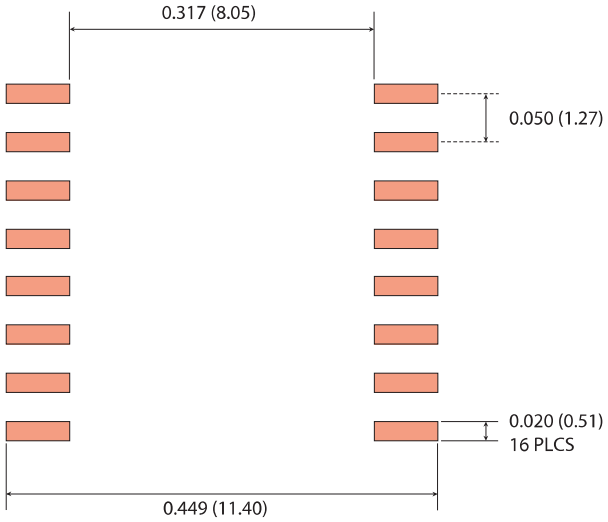

Dimensions: inches (mm); scale = approx. 5X

HCPL-090J, HCPL-091J, and HCPL-092J Narrow Body SOIC-16 Package

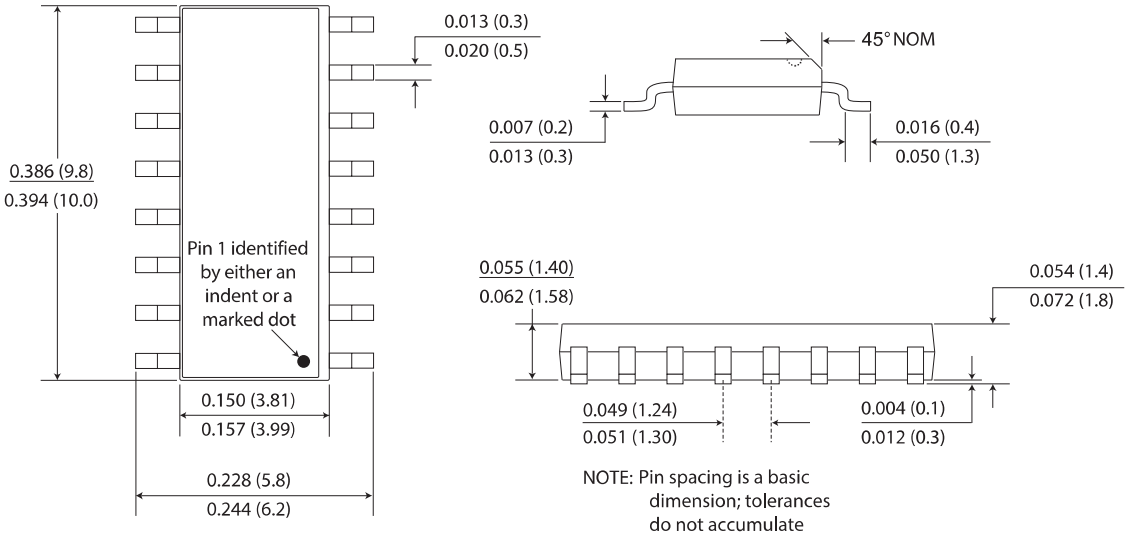

Dimensions: inches (mm); scale = approx. 5X

Pad Layout

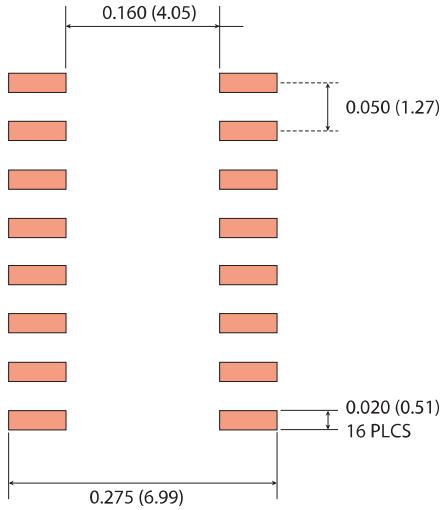

Dimensions: inches (mm); scale = approx. 5X

Package Characteristics

Parameter	Symbol	Min.	Typ.	Max.	Unit	Test Conditions
Capacitance (Input-Output)[a]	C_{I-O}				pF	f = 1 MHz.
Single Channel		—	1.1	—		
Dual Channel		—	2.0	—		
Quad Channel		—	4.0	—		
Thermal Resistance	θ_{JCT}				°C/W	Thermocouple located at center underside of package.
8-Pin PDIP		—	54	—		
8-Pin SOIC		—	144	—		
16-Pin SOIC Narrow Body		—	41	—		
16-Pin SOIC Wide Body		—	28	—		
Package Power Dissipation	P_{PD}				mW	
8-Pin PDIP		—	—	150		
8-Pin SOIC		—	—	150		
16-Pin SOIC Narrow Body		—	—	150		
16-Pin SOIC Wide Body		—	—	150		

a. Single- and dual-channel device are considered two-terminal devices: pins 1 to 4 shorted and pins 5 to 8 shorted. Quad-channel devices are considered two-terminal devices: pins 1 to 8 shorted and pins 9 to 16 shorted.

Note: This product has been tested for electrostatic sensitivity to the limits stated in the specifications. However, Broadcom recommends that all integrated circuits be handled with appropriate care to avoid damage. Damage caused by inappropriate handling or storage could range from performance degradation to complete failure.

Insulation and Safety Related Specifications

Parameter	Condition	Min.	Typ.	Max.	Unit
Barrier Resistance || Capacitance					Ω || pF
Single Channel		—	$>10^{14}$ || 3	—	
Dual Channel		—	$>10^{14}$ || 3	—	
Quad Channel		—	$>10^{14}$ || 7	—	
Creepage Distance (External)					mm
8-Pin PDIP		7.04	—	—	
8-Pin SOIC		4.04	—	—	
16-Pin SOIC Narrow Body		4.03	—	—	
16-Pin SOIC Wide Body		8.08	—	—	
Leakage Current	240 V_{rms}, 60 Hz	—	0.2	—	µA

Soldering Profile

The recommended reflow soldering conditions are per JEDEC Standard J-STD-020 (latest revision).

Absolute Maximum Ratings

Parameter	Symbol	Min.	Max.	Unit
Storage Temperature	T_S	–55	150	°C
Ambient Operating Temperature[a]	T_A	–55	125	°C
Supply Voltage	V_{DD1}, V_{DD2}	–0.5	7	V
Input Voltage	$\overline{V}_{IN}$	–0.5	V_{DD1} + 0.5	V
Voltage Output Enable (HCPL-9000/-0900)	V_{OE}	–0.5	V_{DD2} + 0.5	V
Output Voltage	V_{OUT}	–0.5	V_{DD2} + 0.5	V
Output Current Drive	I_{OUT}	—	10	mA
Lead Solder Temperature (10s)		—	260	°C
ESD	2 kV Human Body Model			

a. Absolute maximum ambient operating temperature means the device will not be damaged if operated under these conditions. It does not guarantee performance.

Recommended Operating Conditions

Parameter	Symbol	Min.	Max.	Unit
Ambient Operating Temperature	T_A	–40	100	°C
Supply Voltage	V_{DD1}, V_{DD2}	3.0	5.5	V
Logic High Input Voltage	V_{IH}	2.4	V_{DD1}	V
Logic Low Input Voltage	V_{IL}	0	0.8	V
Input Signal Rise and Fall Times	t_{IR}, t_{IF}	—	1	µs

Note: This product has been tested for electrostatic sensitivity to the limits stated in the specifications. However, Broadcom recommends that all integrated circuits be handled with appropriate care to avoid damage. Damage caused by inappropriate handling or storage could range from performance degradation to complete failure.

3.3V Operation: Electrical Specifications

Test conditions that are not specified can be anywhere within the recommended operating range. All typical specifications are at T_A = +25°C, V_{DD1} = V_{DD2} = +3.3V.

Parameter	Symbol	Min.	Typ.	Max.	Unit	Test Conditions
Quiescent Supply Current 1	I_{DD1}				mA	V_{IN} = 0V
HCPL-9000/-0900		—	0.008	0.01		
HCPL-9030/-0930		—	0.008	0.01		
HCPL-9031/-0931		—	1.5	2.0		
HCPL-900J/-090J		—	0.018	0.02		
HCPL-901J/-091J		—	3.3	4.0		
HCPL-902J/-092J		—	1.5	2.0		

Parameter	Symbol	Min.	Typ.	Max.	Unit	Test Conditions
Quiescent Supply Current 2	I_{DD2}				mA	V_{IN} = 0V
HCPL-9000/-0900		—	3.3	4.0		
HCPL-9030/-0930		—	3.3	4.0		
HCPL-9031/-0931		—	1.5	2.0		
HCPL-900J/-090J		—	5.5	8.0		
HCPL-901J/-091J		—	3.3	4.0		
HCPL-902J/-092J		—	3.0	6.0		
Logic Input Current	I_{IN}	–10	—	10	µA	
Logic High Output Voltage	V_{OH}	V_{DD2} – 0.1	V_{DD2}	—	V	I_{OUT} = –20 µA, V_{IN} = V_{IH}
		0.8 * V_{DD2}	V_{DD2} – 0.5	—	V	I_{OUT} = –4 mA, V_{IN} = V_{IH}
Logic Low Output Voltage	V_{OL}	—	0	0.1	V	I_{OUT} = 20 µA, V_{IN} = V_{IL}
		—	0.5	0.8	V	I_{OUT} = 4 mA, V_{IN} = V_{IL}
Switching Specifications						
Maximum Data Rate		100	110	—	MBd	C_L = 15 pF
Clock Frequency	fmax	—	—	50	MHz	
Propagation Delay Time to Logic Low Output	t_{PHL}	—	12	18	ns	
Propagation Delay Time to Logic High Output	t_{PLH}	—	12	18	ns	
Pulse Width	t_{PW}	10	—	—	ns	
Pulse Width Distortion[a] $\lvert t_{PHL} – t_{PLH}\rvert$	|PWD|	—	2	3	ns	
Propagation Delay Skew[b]	t_{PSK}	—	4	6	ns	
Output Rise Time (10% to 90%)	t_R	—	2	4	ns	
Output Fall Time (10% to 90%)	t_F	—	2	4	ns	
Propagation Delay Enable to Output (Single Channel)						
High to High Impedance	t_{PHZ}	—	3	5	ns	
Low to High Impedance	t_{PLZ}	—	3	5	ns	
High Impedance to High	t_{PZH}	—	3	5	ns	
High Impedance to Low	t_{PZL}	—	3	5	ns	
Channel-to-Channel Skew (Dual and Quad Channels)	t_{CSK}	—	2	3	ns	
Common Mode Transient Immunity (Output Logic High or Logic Low)[c]	$\lvert CM_H\rvert$, $\lvert CM_L\rvert$	15	18	—	kV/µs	V_{cm} = 1000V

a. PWD is defined as $\lvert t_{PHL} – t_{PLH}\rvert$. %PWD is equal to the PWD divided by the pulse width.

b. t_{PSK} is equal to the magnitude of the worst-case difference in t_{PHL} and/or t_{PLH} that will be seen between units at 25°C.

c. CM_H is the maximum common mode voltage slew rate that can be sustained while maintaining V_{OUT} > 0.8V_{DD2}. CM_L is the maximum common mode input voltage that can be sustained while maintaining V_{OUT} < 0.8V. The common mode voltage slew rates apply to both rising and falling common mode voltage edges.

Note: This product has been tested for electrostatic sensitivity to the limits stated in the specifications. However, Broadcom recommends that all integrated circuits be handled with appropriate care to avoid damage. Damage caused by inappropriate handling or storage could range from performance degradation to complete failure.

5V Operation: Electrical Specifications

Test conditions that are not specified can be anywhere within the recommended operating range. All typical specifications are at T_A = +25°C, V_{DD1} = V_{DD2} = +5.0V.

Parameter	Symbol	Min.	Typ.	Max.	Unit	Test Conditions
Quiescent Supply Current 1	I_{DD1}				mA	V_{IN} = 0V
HCPL-9000/-0900		—	0.012	0.018		
HCPL-9030/-0930		—	0.012	0.018		
HCPL-9031/-0931		—	2.5	3.0		
HCPL-900J/-090J		—	0.024	0.036		
HCPL-901J/-091J		—	5.0	6.0		
HCPL-902J/-092J		—	2.5	3.0		
Quiescent Supply Current 2	I_{DD2}				mA	V_{IN} = 0V
HCPL-9000/-0900		—	5.0	6.0		
HCPL-9030/-0930		—	5.0	6.0		
HCPL-9031/-0931		—	2.5	3.0		
HCPL-900J/-090J		—	8.0	12.0		
HCPL-901J/-091J		—	5.0	6.0		
HCPL-902J/-092J		—	6.0	9.0		
Logic Input Current	I_{IN}	–10	—	10	µA	
Logic High Output Voltage	V_{OH}	V_{DD2} – 0.1	V_{DD2}	—	V	I_{OUT} = –20 µA, V_{IN} = V_{IH}
		0.8 * V_{DD2}	V_{DD2} – 0.5	—	V	I_{OUT} = –4 mA, V_{IN} = V_{IH}
Logic Low Output Voltage	V_{OL}	—	0	0.1	V	I_{OUT} = 20 µA, V_{IN} = V_{IL}
		—	0.5	0.8	V	I_{OUT} = 4 mA, V_{IN} = V_{IL}
Switching Specifications						
Maximum Data Rate		100	110	—	MBd	C_L = 15 pF
Clock Frequency	fmax	—	—	50	MHz	
Propagation Delay Time to Logic Low Output	t_{PHL}	—	10	15	ns	
Propagation Delay Time to Logic High Output	t_{PLH}	—	10	15	ns	
Pulse Width	t_{PW}	10	—	—	ns	
Pulse Width Distortion[a] $\lvert t_{PHL} – t_{PLH}\rvert$	|PWD|	—	2	3	ns	
Propagation Delay Skew[b]	t_{PSK}	—	4	6	ns	
Output Rise Time (10% to 90%)	t_R	—	1	3	ns	
Output Fall Time (10% to 90%)	t_F	—	1	3	ns	
Propagation Delay Enable to Output (Single Channel)						
High to High Impedance	t_{PHZ}	—	3	5	ns	
Low to High Impedance	t_{PLZ}	—	3	5	ns	
High Impedance to High	t_{PZH}	—	3	5	ns	
High Impedance to Low	t_{PZL}	—	3	5	ns	
Channel-to-Channel Skew (Dual and Quad Channels)	t_{CSK}	—	2	3	ns	

Parameter	Symbol	Min.	Typ.	Max.	Unit	Test Conditions
Common Mode Transient Immunity (Output Logic High or Logic Low)[c]	$\|CM_H\|$, $\|CM_L\|$	15	18	—	kV/µs	V_{cm} = 1000V

a. PWD is defined as $|t_{PHL} – t_{PLH}|$. %PWD is equal to the PWD divided by the pulse width.

b. t_{PSK} is equal to the magnitude of the worst-case difference in t_{PHL} and/or t_{PLH} that will be seen between units at 25°C.

c. CM_H is the maximum common mode voltage slew rate that can be sustained while maintaining $V_{OUT} > 0.8V_{DD2}$. CM_L is the maximum common mode input voltage that can be sustained while maintaining $V_{OUT} < 0.8V$. The common mode voltage slew rates apply to both rising and falling common mode voltage edges.

Note: This product has been tested for electrostatic sensitivity to the limits stated in the specifications. However, Broadcom recommends that all integrated circuits be handled with appropriate care to avoid damage. Damage caused by inappropriate handling or storage could range from performance degradation to complete failure.

Mixed 5V/3.3V or 3.3V/5V Operation: Electrical Specifications

Test conditions that are not specified can be anywhere within the recommended operating range. All typical specifications are at T_A = +25°C, V_{DD1} = +5.0V, V_{DD2} = +3.3V.

Parameter	Symbol	Min.	Typ.	Max.	Unit	Test Conditions
Quiescent Supply Current 1	I_{DD1}				mA	V_{IN} = 0V
HCPL-9000/-0900		—	0.012	0.018		
HCPL-9030/-0930		—	0.012	0.018		
HCPL-9031/-0931		—	2.5	3.0		
HCPL-900J/-090J		—	0.024	0.036		
HCPL-901J/-091J		—	5.0	6.0		
HCPL-902J/-092J		—	2.5	3.0		
Quiescent Supply Current 2	I_{DD2}				mA	V_{IN} = 0V
HCPL-9000/-0900		—	5.0	6.0		
HCPL-9030/-0930		—	5.0	6.0		
HCPL-9031/-0931		—	2.5	3.0		
HCPL-900J/-090J		—	8.0	12.0		
HCPL-901J/-091J		—	5.0	6.0		
HCPL-902J/-092J		—	6.0	9.0		
Logic Input Current	I_{IN}	–10	—	10	µA	
Logic High Output Voltage	V_{OH}	V_{DD2} – 0.1	V_{DD2}	—	V	I_{OUT} = –20 µA, V_{IN} = V_{IH}
		0.8 * V_{DD2}	V_{DD2} – 0.5	—	V	I_{OUT} = –4 mA, V_{IN} = V_{IH}
Logic Low Output Voltage	V_{OL}	—	0	0.1	V	I_{OUT} = 20 µA, V_{IN} = V_{IL}
		—	0.5	0.8	V	I_{OUT} = 4 mA, V_{IN} = V_{IL}

Parameter	Symbol	Min.	Typ.	Max.	Unit	Test Conditions
Switching Specifications						
Maximum Data Rate		100	110	—	MBd	C_L = 15 pF
Clock Frequency	fmax	—	—	50	MHz	
Propagation Delay Time to Logic Low Output	t_{PHL}	—	12	18	ns	
Propagation Delay Time to Logic High Output	t_{PLH}	—	12	18	ns	
Pulse Width	t_{PW}	10	—	—	ns	
Pulse Width Distortion[a] $\lvert t_{PHL} – t_{PLH}\rvert$	|PWD|	—	2	3	ns	
Propagation Delay Skew[b]	t_{PSK}	—	4	6	ns	
Output Rise Time (10% to 90%)	t_R	—	2	4	ns	
Output Fall Time (10% to 90%)	t_F	—	2	4	ns	
Propagation Delay Enable to Output (Single Channel)						
High to High Impedance	t_{PHZ}	—	3	5	ns	
Low to High Impedance	t_{PLZ}	—	3	5	ns	
High Impedance to High	t_{PZH}	—	3	5	ns	
High Impedance to Low	t_{PZL}	—	3	5	ns	
Channel-to-Channel Skew (Dual and Quad Channels)	t_{CSK}	—	2	3	ns	
Common Mode Transient Immunity (Output Logic High or Logic Low)[c]	$\lvert CM_H\rvert$, $\lvert CM_L\rvert$	15	18		kV/µs	V_{cm} = 1000V

a. PWD is defined as $\lvert t_{PHL} – t_{PLH}\rvert$. %PWD is equal to the PWD divided by the pulse width.

b. t_{PSK} is equal to the magnitude of the worst-case difference in t_{PHL} and/or t_{PLH} that will be seen between units at 25°C.

c. CM_H is the maximum common mode voltage slew rate that can be sustained while maintaining $V_{OUT} > 0.8V_{DD2}$. CM_L is the maximum common mode input voltage that can be sustained while maintaining $V_{OUT} < 0.8V$. The common mode voltage slew rates apply to both rising and falling common mode voltage edges.

Note: This product has been tested for electrostatic sensitivity to the limits stated in the specifications. However, Broadcom recommends that all integrated circuits be handled with appropriate care to avoid damage. Damage caused by inappropriate handling or storage could range from performance degradation to complete failure.

Application Information

Power Consumption

The HCPL-90xx and HCPL-09xx CMOS digital isolators achieves low power consumption from the manner by which they transmit data across isolation barrier. By detecting the edge transitions of the input logic signal and converting this to a narrow current pulse, which drives the isolation barrier, the isolator then latches the input logic state in the output latch. Since the current pulses are narrow, about 2.5 ns wide, the power consumption is independent of mark-to-space ratio and solely dependent on frequency.

The approximate power supply current per channel is:

I(Input) = 40(f/fmax)(1/4) mA

where f = operating frequency, fmax = 50 MHz.

Signal Status on Start-up and Shut Down

To minimize power dissipation, the input signals to the channels of HCPL-90xx and HCPL-09xx digital isolators are differentiated and then latched on the output side of the isolation barrier to reconstruct the signal. This could result in an ambiguous output state depending on power up, shutdown, and power loss sequencing. Therefore, the designer should consider the inclusion of an initialization signal in this start-up circuit. Initialization consists of toggling the input either high then low or low then high.

Bypassing and PC Board Layout

The HCPL-90xx and HCPL-09xx digital isolators are extremely easy to use. No external interface circuitry is required because the isolators use high-speed CMOS IC technology allowing CMOS logic to be connected directly to the inputs and outputs. As shown in Figure 1, the only external components required for proper operation are low ESR 47 nF ceramic capacitors for decoupling the power supplies. Ground planes for both GND_1 and GND_2 are highly recommended for data rates above 10 Mb/s. Capacitors must be located as close as possible to the V_{DD} pins.

Figure 1: Functional Diagram of Single-Channel HCPL-0900 or HCPL-0900

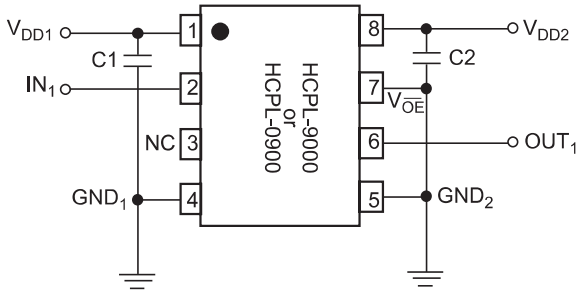

Note: C1, C2 = 47 nF ceramic capacitors.

Propagation Delay, Pulse Width Distortion and Propagation Delay Skew

Propagation Delay is a figure of merit, which describes how quickly a logic signal propagates through a system as illustrated in Figure 2.

Figure 2: Timing Diagram to Illustrate Propagation Delay, t_{PLH} and t_{PHL}

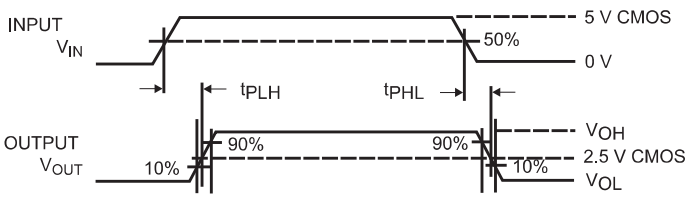

The propagation delay from low to high, t_{PLH}, is the amount of time required for an input signal to propagate to the output, causing the output to change from low to high. Similarly, the propagation delay from high to low, t_{PHL}, is the amount of time required for the input signal to propagate to the output, causing the output to change from high to low.

Pulse Width Distortion, PWD, is the difference between t_{PHL} and t_{PLH} and often determines the maximum data rate capability of a transmission system. PWD can be expressed in percent by dividing the PWD (in ns) by the minimum pulse width (in ns) being transmitted. Typically, PWD on the order of 20% to 30% of the minimum pulse width is tolerable.

Propagation Delay Skew, t_{PSK}, and Channel-to-Channel Skew, t_{CSK}, are critical parameters to consider in parallel data transmission applications where synchronization of signals on parallel data lines is a concern. If the parallel data is being sent through channels of the digital isolators, differences in propagation delays will cause the data to arrive at the outputs of the digital isolators at different times. If this difference in propagation delay is large enough, it will limit the maximum transmission rate at which parallel data can be sent through the digital isolators.

t_{PSK} is defined as the difference between the minimum and maximum propagation delays, either t_{PLH} or t_{PHL}, among two or more devices that are operating under the same conditions (i.e., the same drive current, supply voltage, output load, and operating temperature). t_{CSK} is defined as the difference between the minimum and maximum propagation delays, either t_{PLH} or t_{PHL}, among two or more channels within a single device (applicable to dual and quad channel devices) that are operating under the same conditions.

As illustrated in Figure 3, if the inputs of two or more devices are switched either ON or OFF at the same time, t_{PSK} is the difference between the minimum propagation delay, either t_{PLH} or t_{PHL}, and the maximum propagation delay, either t_{PLH} or t_{PHL}.

Figure 3: Timing Diagram to Illustrate Propagation Delay Skew

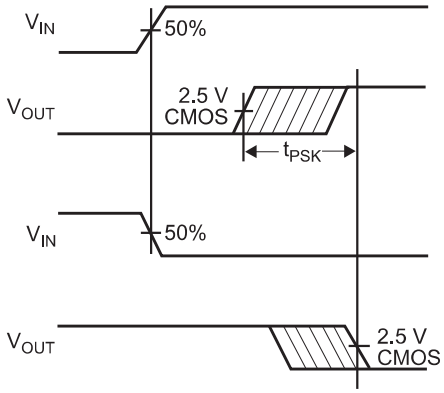

As mentioned previously, t_{PSK}, can determine the maximum parallel data transmission rate. Figure 4 shows the timing diagram of a typical parallel data transmission application with both the clock and data lines being sent through the digital isolators. The figure shows data and clock signals at the inputs and outputs of the digital isolators. In this case, the data is clocked off the rising edge of the clock.

Figure 4: Parallel Data Transmission

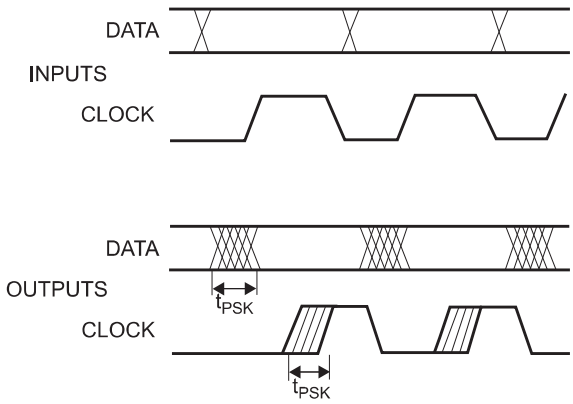

Propagation delay skew represents the uncertainty of where an edge might be after being sent through a digital isolator. Figure 4 shows that there will be uncertainty in both the data and clock lines. It is important that these two areas of uncertainty not overlap. Otherwise, the clock signal might arrive before all of the data outputs have settled, or some of the data outputs might start to change before the clock signal has arrived. From these considerations, the absolute minimum pulse width that can be sent through digital isolators in a parallel application is twice t_{PSK}. A cautious design should use a slightly longer pulse width to ensure that any additional uncertainty in the rest of the circuit does not cause a problem.

Figure 5 shows the minimum pulse width, rise and fall time, and propagation delay enable to output waveforms for HCPL-9000 or HCPL-0900.

Figure 5: Timing Diagram to Illustrate the Minimum Pulse Width, Rise and Fall Time, and Propagation Delay Enable to Output Waveforms for HCPL9000 or HCPL-0900

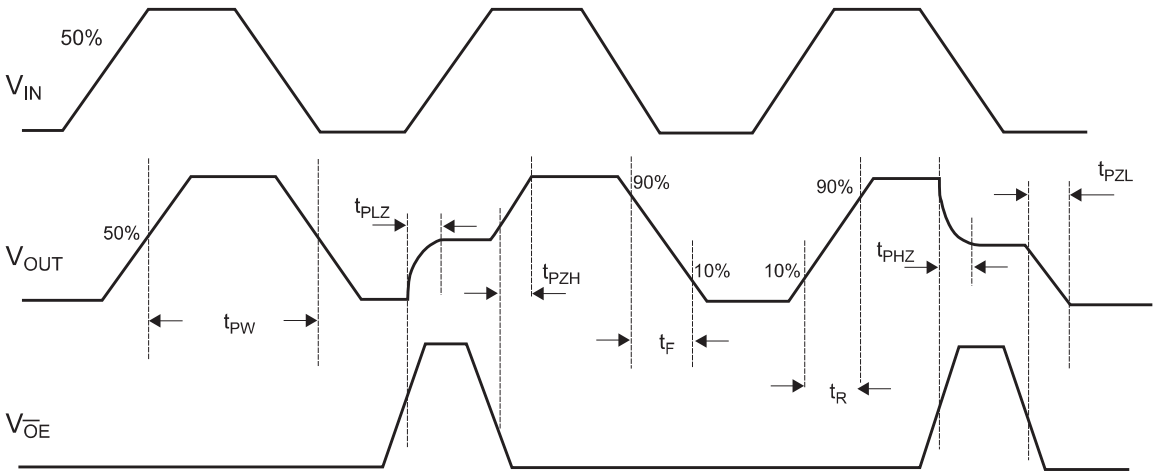

t_{PW}	Minimum Pulse Width
t_{PLZ}	Propagation Delay, Low to High Impedance
t_{PZH}	Propagation Delay, High Impedance to High
t_{PHZ}	Propagation Delay, High to High Impedance
t_{PZL}	Propagation Delay, High Impedance to Low
t_R	Rise Time
t_F	Fall Time

Copyright © 2018–2024 Broadcom. All Rights Reserved. The term “Broadcom” refers to Broadcom Inc. and/or its subsidiaries. For more information, go to www.broadcom.com. All trademarks, trade names, service marks, and logos referenced herein belong to their respective companies.

Broadcom reserves the right to make changes without further notice to any products or data herein to improve reliability, function, or design. Information furnished by Broadcom is believed to be accurate and reliable. However, Broadcom does not assume any liability arising out of the application or use of this information, nor the application or use of any product or circuit described herein, neither does it convey any license under its patent rights nor the rights of others.

BROADCOM®

Lead (Pb) Free
RoHS 6 fully compliant
RoHS 6 fully compliant options available;
-xxxE denotes a lead-free product