Technical data

7003UCG/GNP42

High precision angular contact ball bearings

VISUAL (S)

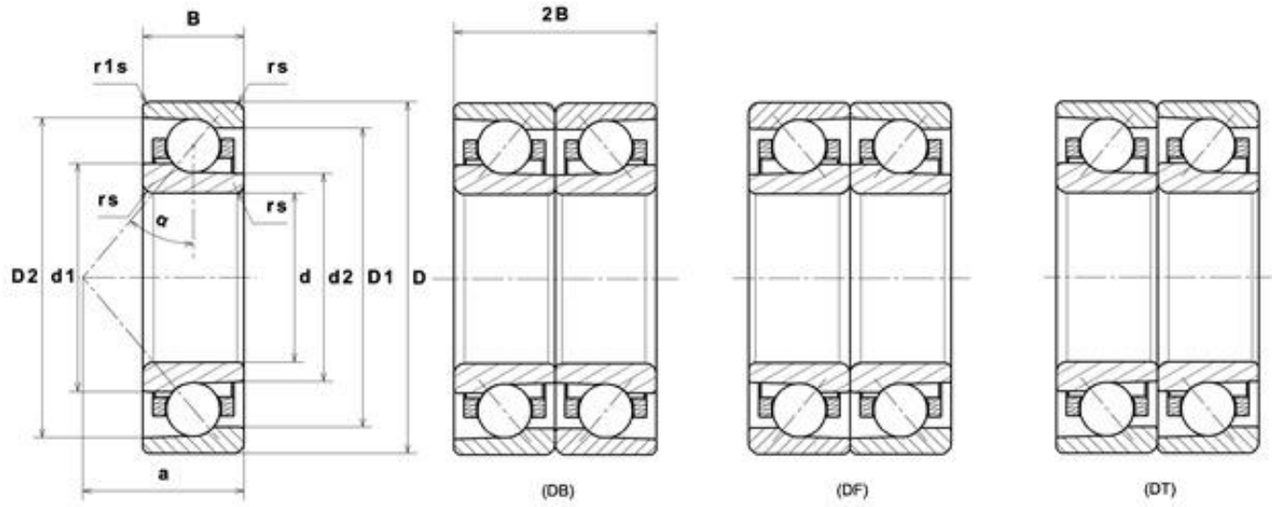

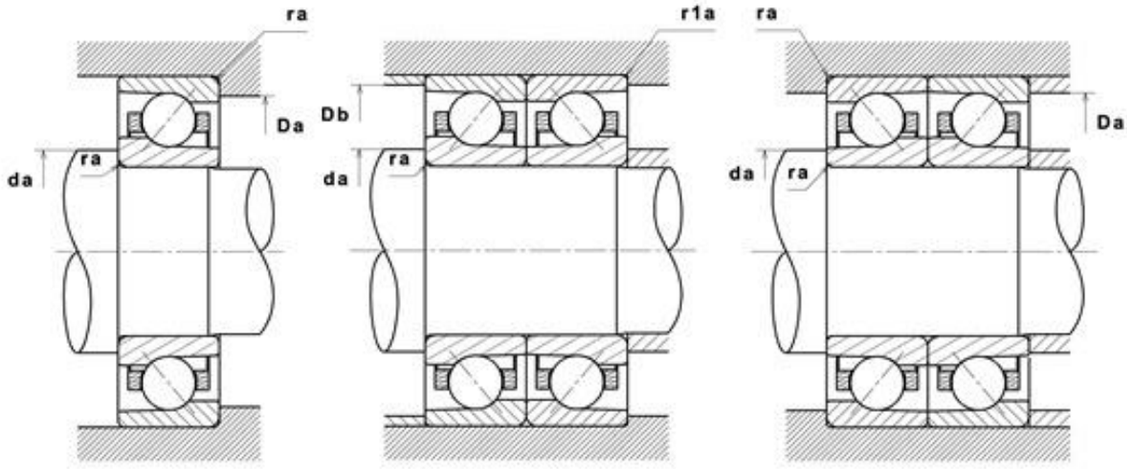

NTN Europe
1 rue des Usines · BP 2017 · 74010 Annecy Cedex · France · Tel. +33 (0)4 50 65 30 00
S.A. au capital de 322 639 919 € · RCS ANNECY B 325 821 072 · Id. Fiscale : FR 48 325 821 072
SIRET 325 821 072 00015 · Code APE 2815 Z · Code NACE 28.15

7003UCG/GNP42

High precision angular contact ball bearings

PRODUCT DEFINITION	
Brand	NTN
d - Internal diameter	17 mm
D - External diameter	35 mm
B - Bearing/Inner ring width	10 mm
d1 - External diameter inner ring	23 mm
d2 - External diameter inner ring	21,6 mm
D1 - Inner diameter outer ring	29 mm
D2 - Inner diameter outer ring	32 mm
a - Charge load application point	8,5 mm
- Contact angle	15 °
rs - Min fillet radius	0,3 mm
r1s - Min fillet radius	0,15 mm
Precision class	P42
Mass	0,037 kg

PRODUCT PERFORMANCE	
C - Dynamic load	9100000 mN
C0 - Static load	4550000 mN
f0 - Coefficient	13.8
N lim - Oil lubrication limit speed	432599,999 °/s
N lim - Grease lubrication limit speed	270599,999 °/s
Preload level	GN
Preload value	49000 mN
Tmin - Min operating temperature	253,15 °K

7003UCG/GNP42

High precision angular contact ball bearings

PRODUCT PERFORMANCE	
Tmax - Max operating temperature	393,15 °K

ABUTMENT	
da min - Min shoulder diameter IR	19,5 mm
Da max - Max shoulder diameter OR	32,5 mm
Db max - Max OR shoulder diameter	33,8 mm
r1a - Max fillet radius	0,15 mm
ra max - Max shaft & housing fillet radius	0,3 mm

INDUSTRY CALCUL FACTORS

Equivalent dynamic radial load

P = X.Fr + Y.Fa

Series				e	Single or DT bearing arrangement				DB or DF arrangement			
					Fa / Fr ≤ e		Fa / Fr > e		Fa / Fr ≤ e		Fa / Fr > e	
					X	Y	X	Y	X	Y	X	Y
70 (NTN & SNR) 72 (NTN & SNR) 78 (NTN) 79 (NTN) 719 (SNR)		15°	0.178	0.38	1	0	0.44	1.47	1	1.65	0.72	2.39
			0.357	0.4				1.4		1.57		2.28
			0.714	0.43				1.3		1.46		2.11
			1.07	0.46				1.23		1.38		2
			1.43	0.47				1.19		1.34		1.93
			2.14	0.5				1.12		1.26		1.82
			3.57	0.55				1.02		1.14		1.66
			5.35	0.56						1.12		1.63
			7.14	0.56				1		1.12		1.63
		25°		0.68			0.41	0.87		0.92	0.67	1.41
		30°		0.8			0.39	0.76		0.78	0.63	1.24

Equivalent static radial load

Po = Xo.Fr + Yo.Fa

Series			Single or DT bearing arrangement		DB or DF arrangement	
			X_0	Y_0	X_0	Y_0
70 (NTN & SNR) 72 (NTN & SNR) 78 (NTN) 79 (NTN) 719 (SNR)		15°	0.5	0.46	1	0.92
		25°		0.38		0.76
		30°		0.33		0.66

For single or DT bearing arrangement :

If Po <Fr, then use Po = Fr