CMMT-AS-C2/-C4-3A-MP-S3

Servo drive

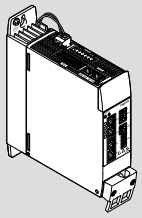

Festo SE & Co. KG
Ruiter Straße 82
73734 Esslingen
Germany
+49 711 347-0

www.festo.com

Operating instruction | Installation, Safety sub-function

8225853
2025-06
[8225855]

8225853

Original instructions

© 2025 all rights reserved to Festo SE & Co. KG

BiSS, EnDat, EtherCAT, EtherNet/IP, HEIDENHAIN, Hiperface, MODBUS, Nikon, PI PROFIBUS PROFINET, PROFIsafe, TORX are registered trademarks of the respective trademark owners in certain countries.

1 About this document

1.1 Target group

The document is targeted towards persons who mount and operate the product. It is additionally targeted towards individuals who are entrusted with the planning and application of the product in a safety-related system (safety manual in accordance with EN 61508).

1.2 Applicable documents

All available documents for the product ➔ www.festo.com/sp.

The user documentation for the product also includes the following documents:

Identifier	Content
Operating instructions for the product	Installation, safety sub-function
Manuals for the product	Detailed description for assembly and installation
	Detailed description of safety sub-function
Manual/online help plug-in	Cyber security measures. Plug-in: – Functions and operation of the software – Initial commissioning wizard Firmware functions: – Configuration and parameterisation – Operating modes and operational functions – Diagnostics and optimisation Bus protocol/control: – Device profile – Controller and parameterisation
Festo Automation Suite online help	– Function of the Festo Automation Suite – Management and integration of device-specific plug-ins
Operating instructions CDSB	General functions of the operator unit

Tab. 1: User documentation for the product

1.3 Product version

This documentation refers to the following version:
– Servo drive CMMT-AS-...-S3, revision R01 and higher, see product labelling

Current version of the document ➔ www.festo.com/sp.
Check whether an updated firmware version is available ➔ www.festo.com/sp; if there is, update the firmware.

1.4 Product labelling

– Observe the specifications on the product.
The product labelling is located on the right side of the device. The product labelling enables identification of the product and shows the following information, for example:

Product labelling (example)	Meaning
CMMT-AS-C2-3A-MP-S1	Order code
5340819 MM-YYYY : 02 Rev 00	Part number, serial number (MM = production month, YYYY = production year, plant number), revision (Rev)
Main input: 100 V AC - 20% … 230 V AC + 15% 48 … 62 Hz 2.8 A_{RMS}	Technical data on power supply (alternating current supply connection)
Motor out: 3 x 0 … input V AC 0 … 599 Hz 2 A_{RMS} 350 W	Technical data for the motor output (output voltage, max. output frequency, nominal current, nominal output power)
T_{AMB}: max. 40 – 50 °C	Ambient temperature (T_{AMB})
IP10/20 OVC III PD2	Degree of protection, without mating plug/with mating plug X9A connected; overvoltage category; pollution degree
SCCR: 100 kA	SCCR (short circuit current rating)
R-REM-FTO-KC-2018-1054	KC mark certificate (test mark for Korea)
MAC: XX-XX-XX-XX-XX-XX	first MAC address of the device for Ethernet communication
See manual for additional information	Reference to the existing user documentation, which contains information on overload protection and the necessary external circuit breaker.
Data matrix code, 123456789AB	Product Key as a data matrix code and an 11-character alphanumeric code
Festo SE & Co. KG	Manufacturer
DE-73734 Esslingen	Manufacturer's address
Made in Germany	Country of origin Germany

Tab. 2: Product labelling (example)

Warning symbols on the front of the product

Warning symbol	Meaning with the CMMT-AS-...
	Attention! Hot surface Metallic housing parts of the device can reach high temperatures during operation. In the event of a fault, internal components may become overloaded. Overloading of components can result in high temperatures and the release of hot gases.
	Attention! General danger point The touch current in the protective earthing conductor can exceed an alternating current of 3.5 mA or a direct current of 10 mA. Always connect both protective earthing connections to the mains-side PE connection, the PE pin of [X9A] and PE earthing screw on the housing. The minimum cross section of the protective earthing conductor must comply with the local safety regulations for protective earthing conductors for equipment with high leakage current.
5 min	Attention! Dangerous voltage The product is equipped with DC link capacitors, which store dangerous voltage for up to 5 minutes after the power supply is switched off. Do not touch power connections for 5 minutes after the power supply is switched off. After the power supply is switched off, wait at least 5 minutes until the DC link capacitors have discharged.

Tab. 3: Meaning of the warning symbols

Warnings on the product (en, fr)	Meaning
CAUTION Risk of Electric Shock! Do not touch electrical connectors for 5 minutes after switching power off! Read manual before installing! High leakage current! First connect to earth!	Caution Risk of electric shock! Do not touch electrical connections for 5 minutes after switching power off! Read manual before installing! High leakage current after PE! First connect device to PE!
AVERTISSEMENT Risque du choc électrique! Une tension dangereuse peut être présentée jusqu'à 5 minutes aprés avoir coupé l'alimentation ! Lire le manuel avant installation ! Courant de défaut élevée ! Relier tout d´abord à la terre !	
DANGER Risk of Electric Shock! Disconnect power and wait 5 minutes before servicing.	Danger Risk of electric shock! Disconnect power and wait 5 minutes before servicing.
Risque du choc électrique! Débranchez l'alimentation et attendez 5 min. avant de procéder à l'entretien.	
WARNING Hot surface - Risk of burn!	Warning Hot surface – danger of burns!
ATTENTION Risque de temperature élevée en surface!	

Tab. 4: Warnings on the product

1.5 Specified standards

Version	
EN IEC 61800-2:2021	EN ISO 13849-1:2023
EN IEC 61800-3:2018	EN ISO 13849-2:2012
DIN EN 61800-5-1:2017	EN 61508 Parts 1-7:2010
EN 61800-5-2:2017	EN 61131-2:2007
DIN EN 60204-1:2019	–

Tab. 5: Standards specified in the document

2 Safety

2.1 Safety instructions

General safety instructions
– Assembly and installation are only to be carried out by qualified personnel.
– Only use the product if it is in perfect technical condition.
– Only use the product in its original condition without unauthorised modifications.

- Do not carry out repairs on the product. If defective, replace the product immediately.
- Observe the identifications on the product.
- Take into account the ambient conditions at the location of use.
  The safety function might fail and malfunctions might occur if you do not comply with the parameters required for the ambient and connection conditions.
- The product may generate high frequency interference, which may require interference suppression measures in residential areas.
- Wear the prescribed personal protective equipment for transport, assembly and disassembly of product version with a high weight.
- Never remove or insert a plug connector when the power is switched on.
- Do not loosen any screws on the product other than the following:
  - Earthing screw on the cooling element for mounting the PE connection on the mains side
  - Retaining screws of the shield clamp on the housing front
  - For applications in IT networks only: screw for connecting the internal mains filter with PE
- Install the product in a suitable control cabinet. The minimum degree of protection required for the control cabinet is IP54.
- Operate the product only in an installed condition when all required protective measures have been taken (➔ EN 60204-1).
- Fully insulate all conducting lines on the product. We recommend plastic wire end sleeves for wiring power connections. During wiring, please observe the necessary strip lengths.
- Information on strip length ➔ Manual Assembly, Installation.
- Ensure correct protective earthing and shield connection.
- Prior to commissioning, ensure that the resulting movements of the connected actuator technology cannot endanger anyone.
- During commissioning: systematically check all control functions and the communication and signal interface between controller and servo drive.
- The product is equipped with DC link capacitors, which store dangerous voltage for up to 5 minutes after the power supply is switched off. Before working on the product, switch off the power supply via the main switch and secure it against being switched on again unintentionally. Do not touch the power connections for at least 5 minutes.
- Take the legal regulations for the installation location into account.
- Keep the documentation in a safe place for the duration of the product lifecycle.

In the event of damage caused by unauthorised manipulation or any use other than that intended, the warranty is invalidated and the manufacturer is not liable for damages.
In the event of damage caused by using unauthorised software or firmware with the device, the warranty will be invalidated, and the manufacturer will not be liable for damages.

Safety instructions for the safety sub-functions
The suitability of the product for required safety sub-functions can only be determined in conjunction with the assessment of all components involved.
Analyse and validate the safety function of the entire system.
Check the safety functions at adequate intervals for proper functioning. It is the responsibility of the operator to choose the type and frequency of the checks within the specified time period. The manner in which the test is conducted must make it possible to verify that the safety device is functioning perfectly in interaction with all components. Period for cyclical test ➔ 13.1 Technical data, safety engineering.

2.2 Intended use

The servo drive CMMT-AS is intended for the power supply and control of AC servo motors. The integrated electronics enable regulation of torque (current), rotational speed and position.
Use exclusively:
- in perfect technical condition
- in original condition without unauthorised modifications; only the extensions described in the documentation supplied with the product are permitted
- within the limits of the product as defined by the technical data ➔ 13 Technical data
- in an industrial environment

The safety function might fail and malfunctions might occur if you do not comply with the parameters required for the ambient and connection conditions.
The CMMT-AS-...-S3 supports the following safety sub-functions in accordance with EN 61800-5-2:
- Safe torque off, STO.
- Safe brake control, SBC.
- Safe stop 1, SS1.
- Safe stop 2, SS2.
- Safe operating stop, SOS.
- Safely-limited speed, SLS.

The device also supports the following functions defined by Festo:
- Safe maximum speed, SMS.

2.2.1 Application areas

The device is intended for use in an industrial environment and with appropriate measures in commercial, residential and mixed areas.
The device is intended for installation in a control cabinet. The minimum degree of protection required for the control cabinet is IP54.
The device can be operated in TN, TT and IT systems if certain requirements are met.
Information on allowed and prohibited mains types of system earthing and necessary measures for use in IT networks ➔ Manual Assembly, Installation.
Safety sub-functions may only be used for applications for which the stated safety reference values are sufficient ➔ 13.1 Technical data, safety engineering.

2.2.2 Permissible components

- In addition to the requirements of EN 60204-1, the components of the drive system must comply with the requirements for fault exclusions from EN 61800-5-2:
  - Annex D.3.5 and D.3.6 for motors
  - Annex D.3.1 for motor and brake cables
  - Annex D.3.4 for mating plugs
  - Annex D.3.16 for motion and position feedback sensors, depending on the encoder combination ➔ 13.1.7 Diagnostic coverage of sensor systems
- Check whether further fault exclusions are required, for example, for gear units, shaft connections, etc.
- A risk assessment must be carried out for all required safety sub-functions of the application for the selection and design of all components of the overall safety system.
- All plugs and connecting cables must meet the requirements of EN 60204-1.
- The logic power supply must meet the requirements of EN 60204-1 (protective extra-low voltage, PELV).
- Use only suitable encoder combinations for the required safety rating ➔ 13.1.6 Safety sub-functions with motion monitoring and with or without brake control. Fault exclusions may be required for mounting the encoder.
- If holding brakes and clamping units without certification are used, a risk assessment is required to assess their suitability for the related safety-oriented application.

2.3 Foreseeable misuse

Foreseeable misuse in general
- Operation outside the limits of the product defined in the technical data.
- Cross-wiring of the I/O signals of more than 10 servo drives CMMT-AS.
- Operation in IT networks without insulation monitors for detection of earth faults.
  If the device is operated in IT networks, the potential conditions will change in the event of a fault (earth fault on the feeding mains supply). As a result, the rated voltage of 300 V to PE – which has important implications for the design of insulation and network separation – will be exceeded. This fault must be detected.
- Use of a diagnostic output for connection of a safety function.
  The diagnostic outputs SOUT... are not components of the safety circuit. The diagnostic outputs may only be used in combination with the related safe control signals (AND-operation), plus a reliable time monitoring function in the safety relay unit for the purpose of switching additional safety-critical functions.

Foreseeable misuse of the safety sub-functions STO and SS1+STO
- Use of the STO function without external measures for drive axes subject to external torques.
  If external torques are applied to the drive axis, use of the safety sub-function STO on its own is not suitable for safely stopping the axis. Additional measures are required to prevent dangerous movements of the drive axis, such as use of a mechanical brake in combination with the safety sub-function SBC.
- Disconnection of the motor from the power supply.
  The safety sub-function STO does not disconnect the drive from the power supply as defined by electrical safety.

Foreseeable misuse of the safety sub-function SBC and SS1+SBC
- Use of an unsuitable holding brake or clamping unit, e.g. in view of:
  - Holding torque, braking torque and, if required, emergency braking properties.
  - Frequency of actuation.
- The use of a brake configuration that is unsuitable for the required safety rating, e.g. the use of only one brake.
- Use of an unsuitable logic voltage supply.

Foreseeable misuse for safety sub-functions with motion monitoring
For the safety sub-functions SS1-r, SS2-r, SS2-t, SOS, SLS and SMS:
- Use of an encoder system without the required safety rating.
- Use of an encoder configuration that is unsuitable for the desired safety classification, e.g., the use of only one encoder.
- Use of the interface [X10] (encoder emulation) to simulate a second encoder evaluated by the safety part and to connect it to [X2] or [X3] is not permitted.

2.4 Training of qualified personnel

The product may be installed and commissioned only by a qualified electrical engineer who is familiar with:
- Installation and operation of electrical control systems
- Applicable regulations for operating safety-related systems

Work on safety engineering systems may only be carried out by qualified personnel trained in safety engineering.

2.5 Product conformity

The product-relevant directives are listed in the declaration of conformity ➔ www.festo.com/sp.

Product conformity	
CE	in accordance with EU EMC Directive in accordance with EU Machinery Directive in accordance with EU RoHS Directive
UK CA	to UK EMC Regulations to UK Supply of Machinery Regulations to UK RoHS Regulations

Tab. 6: Product conformity

The protection objectives of the Low Voltage Directive are fulfilled in accordance with the requirements of the EC Machinery Directive. The requirements of the Low Voltage Directive are based on the product standard EN 61800-5-1. The valid version of the product standard is listed in the declaration of conformity.

2.6 Safety engineering approval

The product is a safety device in accordance with the Machinery Directive. For details of the safety-oriented standards and test values that the product complies with and fulfils, see ➔ 13.1 Technical data, safety engineering.

2.7 UL/CSA certification

Technical data and environmental conditions may be subject to change in order to comply with Underwriters Laboratories Inc. (UL) certification requirements for the USA and Canada.
Deviating values ➔ 13.4 Technical data of UL/CSA certification.

2.8 Cyber security measures

For information on required measures, see the Plug-in manual/online help and the Safety Sub-functions manual ➔ 1.2 Applicable documents.

3 Additional information

- Contact the regional Festo contact if you have technical problems ➔ www.festo.com.
- Accessories and spare parts ➔ www.festo.com/catalogue.
- Cyber security information ➔ www.festo.com/psirt.

Firmware, software or configuration files ➔ www.festo.com/sp.

4 Product overview

4.1 Scope of delivery

Components	Number
Servo drive CMMT-AS-...	1
Operating instruction CMMT-AS-...	1
Assortment of plugs NEKM-C6-...	1

Tab. 7: Scope of delivery

4.2 System structure

The servo drive CMMT-AS is a single-axis servo drive. Depending on the product variant, the following components, which are required for standard applications, are integrated into the device or into the cooling profile of the device:
- Mains filter (guarantees immunity to interference and limits conducted emissions)
- Electronics for DC link voltage conditioning
- Power stage (for motor control)
- Braking resistor (integrated into the cooling element)
- Brake chopper (switches the braking resistor in the DC link as and when required)
- Temperature sensors (for monitoring the temperature of the power module and the air in the device)

The servo drive features a real-time Ethernet interface for process control.
The device can be parameterised with a PC using either the real-time Ethernet interface or the separate standard Ethernet interface.

Festo recommends use of servo motors, electromechanical drives, lines and accessories from the Festo accessory programme.

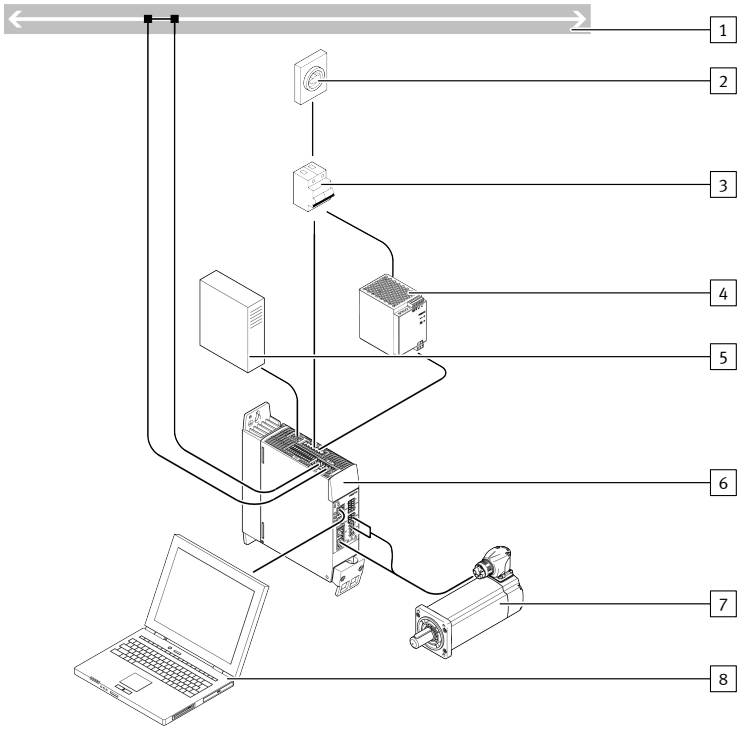

Fig. 1: System structure (example)

1. Bus/network
2. Main switch
3. Automatic circuit breaker/fuses and all-current-sensitive RCD (residual current device) (optional)
4. Fixed power supply for logic voltage supply 24 V DC (PELV)
5. External braking resistor (optional)
6. Servo drive CMMT-AS
7. Servo motor (in this case EMMT-AS-...-RMY)
8. PC with Ethernet connection for parameterisation

4.2.1 Overview of connection technology

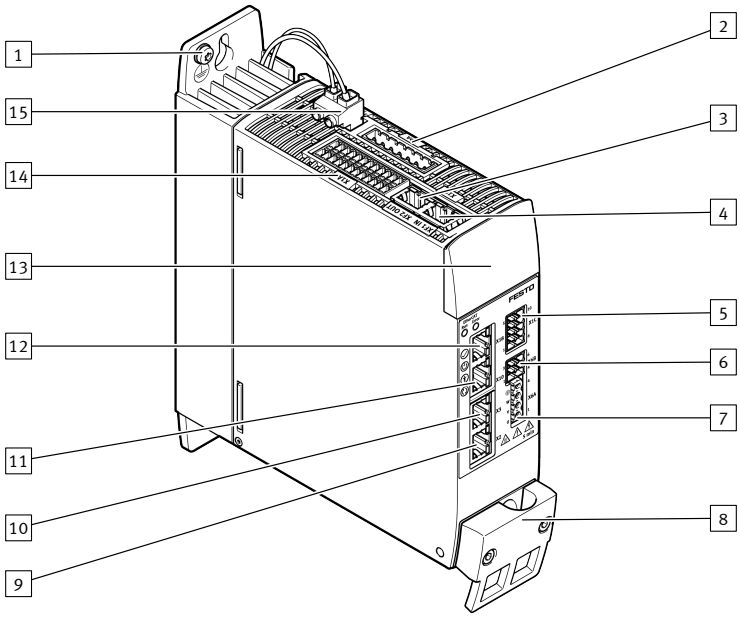

Fig. 2: Connections of the CMMT-AS-...-3A

1. PE connection, housing
2. [X9A] mains voltage, DC link voltage and logic voltage
3. [XF2 OUT] RTE interface port 2
4. [XF1 IN] RTE interface port 1
5. [X1C] inputs/outputs for the axis
6. [X6B] motor auxiliary connection
7. [X6A] motor phase connection
8. Shield clamp of motor cable
9. [X2] encoder connection 1
10. [X3] encoder connection 2
11. [X10] device synchronisation
12. [X18] standard Ethernet
13. [X5] connection for operator unit (behind the blind plate)
14. [X1A] I/O interface
15. [X9B] connection for braking resistor

4.3 Setting bus protocol

The CMMT-AS-...-MP product variant supports several bus protocols.
The following options are available for setting the protocol:
- Configuration in the CMMT-AS plug-in
- Direct setting with DIL switches SW1 to SW3.

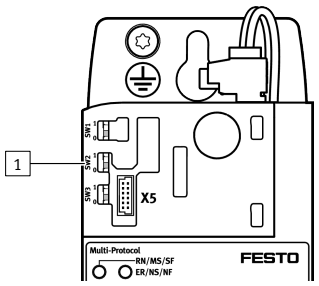

1 DIL switches SW1, SW2, SW3

Fig. 3: DIL switches SW1, SW2, SW3 on the CMMT-AS-...-MP

The switches can be adjusted with a small slotted head screwdriver.
The switch position is evaluated once when the device is started. A change in the switch position therefore only takes effect after the device has been restarted.

Protocols supported by the firmware version used ➔ Manual/online help plug-in, software, function, fieldbus, device profile.

Protocol	SW3	SW2	SW1
Parameterisation	0	0	0
PROFINET	0	0	1
EtherCAT	0	1	0
EtherNet/IP, Modbus TCP	0	1	1
Parameterisation	1	1	1

Tab. 8: Bus protocol switch setting

4.4 Safety sub-functions

4.4.1 Overview of safety sub-functions

The safety sub-functions of the integrated safety part can be classified into the following groups:
- Stop functions
- Monitoring functions
- Output functions (for brake control)

Functions
Stop functions
– STO (Safe torque off)
– SS1 (Safe stop 1) – SS1-t/Safe stop 1 time controlled – SS1-r/Safe stop 1 ramp monitored
– SS2 (Safe stop 2) – SS2-t/Safe stop 2 time controlled – SS2-r/Safe stop 2 ramp monitored
Monitoring functions
– SOS (Safe operating stop)
– SLS (Safely-limited speed)
– SMS (Safe maximum speed)
Output functions (for brake control)
– SBC (Safe brake control)

Tab. 9: Safety sub-functions of the CMMT-AS-...-S3

Complete information on the safety sub-functions ➔ Manual Safety sub-functions.

NOTICE

The safe state of the STOP functions is maintained by the CMMT-AS as long as the request exists on the parameterised control interface. The execution of a requested STOP function cannot be interrupted before the safe state is reached. If the safe state has been reached after a STOP function has been requested, the affected STOP function is immediately cancelled when it is withdrawn. A restart is possible.
Protection against unwanted restart must be ensured by a higher-level control system (safety control system or safety relay unit).
Note: in the case of safety sub-functions that result in the power output stage being switched off by activating the pulse lock (SS1, STO), a signal change at the CTRL-EN input or a corresponding fieldbus telegram may also be required before a restart (not a functional safety signal).

Note when using STO

NOTICE

If there are multiple errors in the servo drive, there is a danger that the drive will move. Failure of the servo drive output stage during the STO status (simultaneous short circuit of 2 power semiconductors in different phases) may result in a limited detent movement of the rotor. The rotation angle/travel corresponds to a pole pitch. Examples:
- Rotating motor, synchronous machine, 8-pin ➔ Movement < 45° at the motor shaft
- Linear motor, pole pitch 20 mm ➔ Movement < 20 mm at the moving part

Note when using SBC and STO

NOTICE

If there are suspended loads, they usually drop if SBC is requested simultaneously with STO. This can be traced back to the mechanical inertia of the holding brake or clamping unit and is thus unavoidable. Check whether safety sub-function SS1 is better suited to your application.

5 Transport and storage

- Protect the product during transport and storage from excessive stress factors. Excessive stress factors include:
  - mechanical stresses
  - impermissible temperatures
  - moisture
  - aggressive atmospheres
- Store and transport the product in its original packaging. The original packaging offers sufficient protection from typical stresses.

6 Assembly

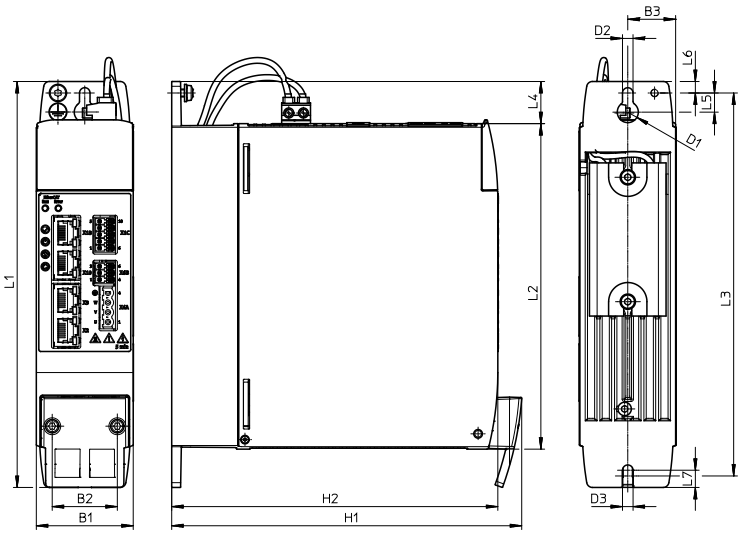

Fig. 4: Dimensions

Dimensions CMMT-AS-C2/C4-3A-...								
Dimension	L1	L2	L3	L4	L5	L6	L7	
[mm]	approx. 212	170	200	22	10	6	9	
Dimension	H1	H2	B1	B2	B3	D1	D2	D3
[mm]	approx. 183	170	approx. 50	34	approx. 25	R5.5	5.5	5.5

Tab. 10: Dimensions CMMT-AS-C2/C4-3A-...

6.1 Mounting clearances of CMMT-AS-...-3A (single-phase)

The servo drives of the CMMT-AS series can be connected in series. When arraying devices, the required minimum distance must be maintained to ensure sufficient air flow to dissipate the heat generated during operation.

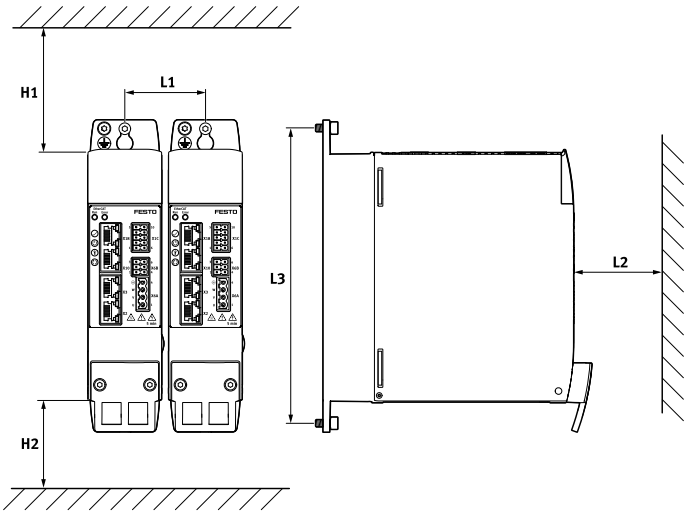

Fig. 5: Mounting clearances and installation clearance of CMMT-AS-...-3A

Servo drive		H1	H2[1]	L1	L2	L3
CMMT-AS-C2-3A-...	[mm]	70	70	52	70	200
CMMT-AS-C4-3A-...	[mm]					

1) To ensure that clearance H2 is observed and the motor and encoder cables have the optimum routing on the bottom of the housing, a mounting clearance of 150 mm is recommended!

Tab. 11: Mounting clearances and installation clearance

This means that a minimum lateral clearance of 2 mm (52 mm – 50 mm) is required to adjacent CMMT-AS devices.
Festo recommends a distance of at least 10 mm (surface temperature of third-party device max. 50 °C) between adjacent third-party devices. The double mating plug for cross-wiring of the connection [X9A] protrudes by approx. 6 … 7 mm over the right side of the device. However, this is not an obstacle to the addition of additional CMMT-AS devices.

6.2 Mounting

Assembly instructions

- Use a control cabinet with degree of protection IP54 or higher.
- Always install device vertically in the control cabinet on a closed surface (mains supply lines [X9A] point upwards).
- Screw device flat to a sufficiently stable mounting surface so that good heat transfer from the cooling element to the mounting surface is ensured (e.g. on the rear wall of the control cabinet).
- Maintain minimum distances and installation clearance to guarantee sufficient air flow. The ambient air in the control cabinet must be able to flow through the device from bottom to top without hindrance.
- Take into account the required clearance for the wiring (connecting cables of the device must be routed from above and from the front).
- Do not mount any temperature-sensitive components near the device. The device can become very hot during operation (switch-off temperature of the temperature monitoring function ➔ Technical data).
- When installing several devices in a device compound, observe the general rules for cross-wiring. For DC link coupling, higher-power devices must be placed closer to the mains supply.
- If there is a voltage supply to the device when the control cabinet is open, vertical access to the bottom and top of the device must be prevented.

The cooling element of the servo drive controller has a keyhole-shaped slot at the top and a simple slot at the bottom for mounting with the rear wall of the control cabinet.

Mounting the servo drive

⚠ WARNING

Danger of burns by hot escaping gases and hot surfaces.
In case of faults, incorrect circuitry or incorrect polarity of the connections [X9A], [X9B] and [X6A], internal components can be overloaded. High temperatures can develop and hot gases can be released.
- Have an authorised electrician perform the installation according to the documentation.

⚠ WARNING

Danger of burns from hot housing surfaces.
Metallic housing parts can accept high temperatures in operation. In particular, the braking resistor installed in the profile on the back side can become very hot. Contact with metal housing parts can cause burn injuries.
- Do not touch metallic housing parts.
- After the power supply is switched off, let the device cool off to room temperature.

- Mount the servo drive on the backwall of the control cabinet with suitable screws while complying with the assembly instructions.
- The cooling element can reach temperatures of > 90 °C in the mounting area. The mounting surface must not contain any combustible or heat-sensitive parts.

7 Installation

7.1 Safety

⚠ WARNING

Risk of injury from electric shock.
Contact with live parts at the power connections [X6A], [X9A] and [X9B] can result in severe injuries or death.
- Do not pull out power supply plugs while live.
- Before touching, wait at least 5 minutes after switching off the load voltage to allow the intermediate circuit to discharge.

⚠ WARNING

Risk of injury from electric shock.
The leakage current of the device to earth (PE) is > 3.5 mA AC or 10 mA DC. Touching the device housing if there is a fault can result in serious injuries or death.
Before commissioning, also for brief measuring and test purposes:
- Connect PE connection on the mains side at the following positions:
  - Protective earth connection (earthing screw) of the housing
  - PE pin of the connection [X9A] (power supply)
    The cross section of the PE conductors must be at least equal to the cross section of the mains conductor L at [X9A].
- Connect motor cable to connection [X6A] and the shield of the motor cable on the front side to PE via the shield clamp of the servo drive.
- Observe the regulations of EN 60204-1 for the protective earthing.

⚠ WARNING

Danger of burns by hot escaping gases and hot surfaces.
In case of faults, incorrect circuitry or incorrect polarity of the connections [X9A], [X9B] and [X6A], internal components can be overloaded. High temperatures can develop and hot gases can be released.
- Have an authorised electrician perform the installation according to the documentation.

⚠ WARNING

Risk of injury from electric shock in the event of incomplete insulation at the power connections [X6A], [X9A] and [X9B].
Before operating, plugging in or unplugging the operator unit CDSB or a connector from a hot-plug-capable interface, the following points must be fulfilled:
- The conducting lines at the device are completely insulated.
- The protective earthing (PE) and the shield connection are correctly connected to the device.
- The housing is free of damage.

⚠ WARNING

Risk of injury due to overheating and electric shock with faulty live components
Closing the branch-circuit protective device with faulty live components may cause fire or electric shock.
- The opening of the branch-circuit protective device may be an indication that a fault current has been interrupted. To reduce the risk of fire or electric shock, current-carrying parts and other components of the controller should be examined and replaced if damaged. If burnout of the current element of an overload relay occurs, the complete overload relay must be replaced.

Earthing the motor housing

⚠ WARNING

Risk of injury from electric shock.
If the cable shield of the motor cable is not connected to protective earthing by the shield clamp, dangerous voltages on the motor housing may cause serious injury or death.
- Connect the cable shield of the motor cable to the earthed device with the shield clamp.
- In addition, always earth the machine bed close to the motor with electrical continuity to the motor flange.

Information for operation with safety function

NOTICE

Check and validate the safety functions to conclude the installation process and after every modification to the installation.

In addition, observe the following during the installation of safety-related inputs and outputs:
- Comply with all specified requirements, e.g.:
  - Surrounding area (EMC)
  - Logic and load voltage supply
  - Mating plug
  - Connecting cables
  - Cross-wiring
- Additional information ➔ Manual Assembly, Installation.
- The maximum permissible cable length between the safety relay unit and the plug connector of the I/O interface is 30 m.

- Comply with the requirements of EN 60204-1 for the installation. In the event of a fault, the voltage may not exceed 60 V DC. The safety relay unit must switch off its outputs in the event of a fault.
- Wiring between the safety relay unit and the I/O interface of the servo drive must be designed to prevent short circuits between the conductors or to 24 V in accordance with EN ISO 13849-2, Table D.4. Otherwise, the safety relay unit must detect a short circuit and, in case of a fault, switch off the control signals on 2 channels.
- Use only suitable mating plugs and connecting cables ➔ Manual Assembly, Installation.
- Prevent conductive contamination between neighboring plug pins.
- Ensure that bridges or similar cannot be inserted parallel to the safety wiring, e.g., by using the maximum wire cross-section or suitable wire ferrules with plastic sleeve.
- Use twin ferrules for cross-wiring of safety-relevant inputs and outputs. A maximum of 10 devices may be cross-wired when cross-wiring inputs and outputs ➔ Manual Assembly, Installation.
- The safety relay unit and its inputs and outputs, as well as the brakes and the encoder combinations, must comply with the required safety classification of the relevant required safety function.
- Connect control inputs to the safety relay unit with dual channel (SIN0, SIN1, SIN2, SIN3) or single-channel (SIN4, ERR-RST) by parallel wiring.
- Check the correct allocation of the motor cables (phases) before commissioning.
- Use only approved motor cables for the BR+/BR– connection.
  The wiring between plug X6B and the motor brake must be designed to prevent a short circuit between the wires for the motor holding brake and other wires of the motor cable; see EN ISO 13849-2, Table D.4. The requirements of EN 60204-1 must also be met.
- If the diagnostics output of the applicable safety sub-function is evaluated, connect the diagnostics output directly to the safety relay unit.
- If diagnostic outputs are cross-wired for a device compound: wire the diagnostic outputs as a ring. Run the two ends of the ring to the safety relay unit and monitor for discrepancies.

7.2 Residual current device

⚠ WARNING

Risk of injury from electric shock.
This product can cause a DC current in the residual-current conductor in case of error. In cases where a residual current device (RCD) or a residual current monitor (RCM) is used to protect against direct or indirect contact, only the type B kind of RCD or RCM is permitted on the power supply side of this product.

Information on the residual current device ➔ Manual Assembly, Installation.
The touch current in the protective earthing conductor can exceed an alternating current of 3.5 mA or a DC current of 10 mA. Always connect both protective earthing connections to the mains-side PE connection, the PE pin of [X9A] and PE earthing screw on the housing. The minimum cross section of the protective earthing conductor must comply with the local safety regulations for protective earthing conductors for equipment with high leakage current.

7.3 Mains fuse

The CMMT-AS has no integrated fuse at the mains input or in the DC link circuit. An external fuse is required at the mains supply of the device. A device compound coupled in the DC link circuit must be protected by means of a common mains fuse.

- Only use line safety switches and fuses that have the relevant approval and meet the specifications and protection requirements stated below.

Requirements for line safety switches (circuit breakers) and fuses

Fuse/circuit breaker type		Line safety switch	Class J/CC fuse
Max. permissible rated current	[A]	16	25
		Restrictions concerning line protection ➔ Tab. 13 Line protection requirements	
Short circuit current rating SCCR of mains fuse	[kA]	Min. 10	Min. 100
Approvals		IEC 60947-2	CE certification
Rated voltage	[V AC]	Min. 240	600
Overvoltage category		III	
Pollution degree		2	
Characteristic		C	Slow-blowing

Tab. 12: Requirements for line safety switches and fuses

In the case of electricity networks with a SCCR > 10 kA, only class J/CC fuses are permitted. The line safety switch is used for line protection. The rated current of the line safety switch must be less than or equal to the acceptable current rating of the selected conductor cross section. The line safety switch must also take into account the overload case and must not trip (overload case: up to a 3-fold increase in the input current for 2 s).

Line protection requirements

Description	Cable cross section at [X9A]	Mains fuse [A][1)]	
	[mm²]	CMMT-AS-C2-3A-...	CMMT-AS-C4-3A-...
Minimum fuse protection	0.75	6	
Maximum fuse protection of an individual device or a device compound	1.5	13	
	2.5	16	

1) Specifications according to DIN VDE 0298-4:2013, permissible currents according to EN 60204-1 may differ (depending on laying method and temperature)

Tab. 13: Line protection requirements

Fuse protection when load circuit is supplied with DC power
The CMMT-AS allows the load circuit to be supplied with DC power. With DC power, external fuse protection is once again required in the form of short circuit protection and line protection. The fuse that is used must be capable of reliably disconnecting the maximum DC supply voltage that could occur and the potential short circuit current ($SCCR_{DC}$).
Maximum fuse protection: 16 A

ⓘ

If fuse protection is to be avoided on the DC side, check whether the fuse protection could alternatively be installed on the AC side upstream of the DC fixed power supply.

7.4 Permissible and impermissible mains types of system earthing

Information on allowed and prohibited mains types of system earthing and necessary measures for use in IT networks ➔ Manual Assembly, Installation.

Leakage currents in IT systems
High-frequency leakage currents to protective earthing (PE) may be encountered even in IT systems (IT = Isolé Terre) during operation of the servo drive. The leakage currents flow to the PE through the coupling capacitances of the motor cable and the motor and back to the servo drive through the coupling capacitance of the isolating transformer via the load supply. The coupling capacitances can be minimised by selection of a suitable isolating transformer and keeping the motor cable as short as possible.

⚠ WARNING

Risk of injury from electric shock.
The servo drive generates high-frequency leakage currents, which can lead to dangerous contact currents on the external conductors and the neutral conductor of the IT system. Touching the mains conductor or the neutral conductor can result in serious injuries or death.

- Before working on the IT systems, disconnect the servo drive from the mains.

7.5 Connection of the mains side PE conductor

For safety reasons all PE conductors must always be connected prior to commissioning. Observe the regulations of EN 60204-1 when implementing protective earthing.
Always connect PE connection on the mains side (PE rail in the control cabinet) at the following positions:
- PE pin of the connection [X9A]
- PE connection (earthing screw) next to the upper slot of the cooling element

The cross section of the PE conductors must be at least equal to the cross section of the mains conductor L at [X9A]. Wire individually wired devices in a star shape. Observe the requirements for cross-wiring for cross-wired devices. Recommendation: use copper earthing strap (advantageous for EMC).

1. Fit a suitable cable lug to the PE conductors for the earthing screw.
2. Tighten earthing screw with a size T20 TORX screwdriver (tightening torque 1.8 Nm ± 15 %).

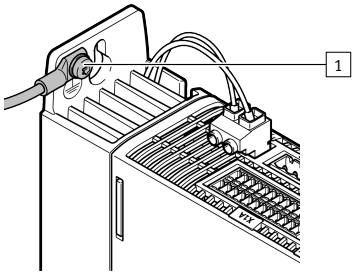

1 PE connection (earthing screw)

Fig. 6: PE connection (earthing screw)

7.6 Information on EMC-compliant installation

A mains filter is integrated into the device. The mains filter fulfils the following tasks:
- Guarantees the device's immunity to interference
- Limits the conducted emissions of the device

The device fulfils the requirements of the relevant product standard EN 61800-3 with suitable installation and wiring of all connecting cables.
The category that the device fulfils is dependent on the filter measures used and the motor cable length. The integrated mains filter is designed so that the device fulfils the following categories when operated as an individual device:

CMMT-AS...	PWM [kHz]	Required measures	Max. permissible motor cable length [m]
Category C2: operation in the first environment (residential area)			
-C2-3A -C4-3A	8	Line choke	15
	16	Line choke and snap ferrite	10
Category C3: operation in the second environment (industrial area)			
-C2-3A -C4-3A	8, 16	– (none)	25
		External mains filter	50

Tab. 14: Category according to the pulse-width modulation frequency and the cable length

Required measures

Measures	Description
Line choke (2 x ≥ 5 mH)	A line choke with two partial windings for the line feeds L1 and N (2 x ≥ 5 mH) must be installed to comply with the mains harmonics in accordance with EN 61000-3-2 – accessories.
Snap ferrite	A snap ferrite (Würth, prod. no. 74272722 or compatible) on motor phases U, V, W (without PE) must be installed for compliance with the malfunction limit values of category C2 at 16 kHz switching frequency. Run stranded conductors 1x through the snap ferrite.
External mains filter	Install a suitable external mains filter – accessories.

Tab. 15: Installation measures for operation in the area of the specified category

To install a line choke ➔ 7.7 Connection examples.

- If set-up and commissioning are performed by a professional with the necessary experience in configuring and commissioning drive systems, including their EMC aspects, category C2 devices can be used (first environment, residential area).
- Limit values for the harmonic currents in the mains supply (EN 61000-3-2) will apply for operation of category C2 devices, based on the connected load of the machine. Please check whether this is the case for your facility/system.
  As a rule, compliance with the limit values for harmonic currents requires the use of external filter measures, e.g. installation of a line choke.
- Category C3 devices are intended for use in the second environment only (industrial environment). Use in the first environment is not permitted.

This product can generate high-frequency malfunctions, which may require interference suppression measures in residential areas.
In practice, the combination of the installed components and their characteristics will influence the achievable length of the motor cable ➔ Manual Assembly, Installation.

7.7 Connection examples

Connection plan, 1-phase mains connection
The following connection diagram shows the 1-phase mains connection of the device with fuse and main switch that does not interrupt the neutral conductor (uninterrupted connection of the neutral conductor when switching on and off).
This type of connection is required if several 1-phase powered servo drives with a common neutral conductor reference are distributed to the mains phases L1, L2 and L3 in a network.
If otherwise stipulated that the neutral conductor must be disconnected when switching on and off, the following note must be observed:

NOTICE

Overvoltage due to asymmetrical mains load
If the neutral conductor has to be disconnected when the device is switched on and off, the device can be damaged by overvoltage due to an asymmetrical network load.

- Design the mains connection with fuse and main switch so that the neutral conductor is always switched on early and switched off later.

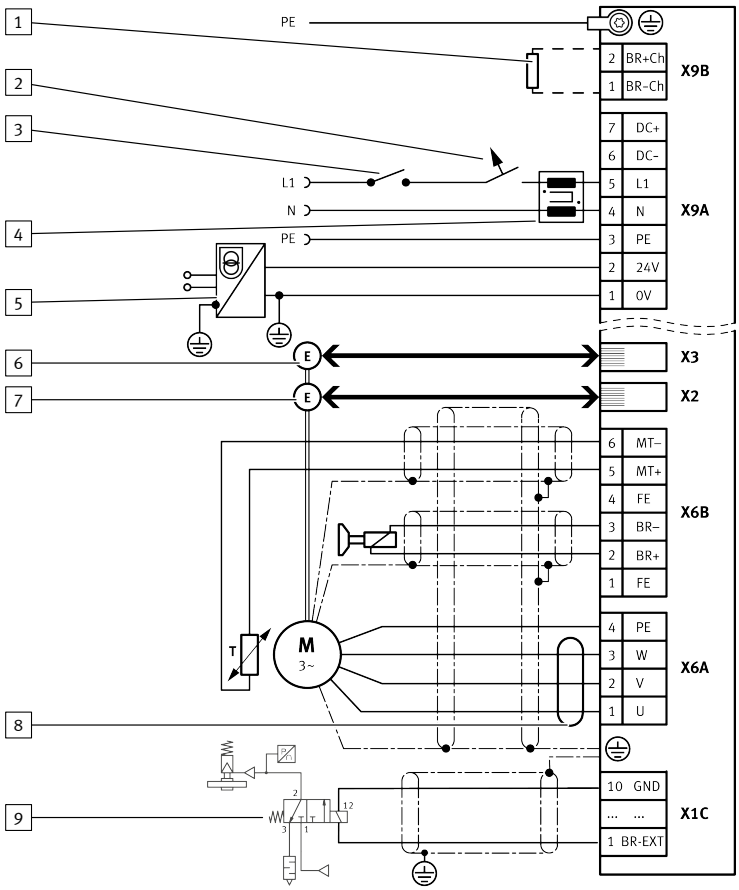

Fig. 7: Connection example, 1-phase mains connection

1	Braking resistor	6	Encoder 2 (optional)
2	Circuit breaker or fuse	7	Encoder 1
3	Main switch/main contactor	8	Snap ferrite (for category C2, 16 kHz)
4	Line choke (for category C2)	9	Example of external brake
5	PELV fixed power supply for 24 V supply		

Measures for 2-phase mains connection ➔ Manual Assembly, Installation.
To achieve the safety rating, a second encoder or an additional external brake may be required.

Connection example for safety sub-function
Depending on the parameterisation, the request for a safety sub-function can be made through safe digital inputs or through a safe fieldbus. If a request is made through safe digital inputs, a safety sub-function is assigned to each 2-channel input #SINx. The following figure shows an example of the SS1 and SLS safety sub-functions.

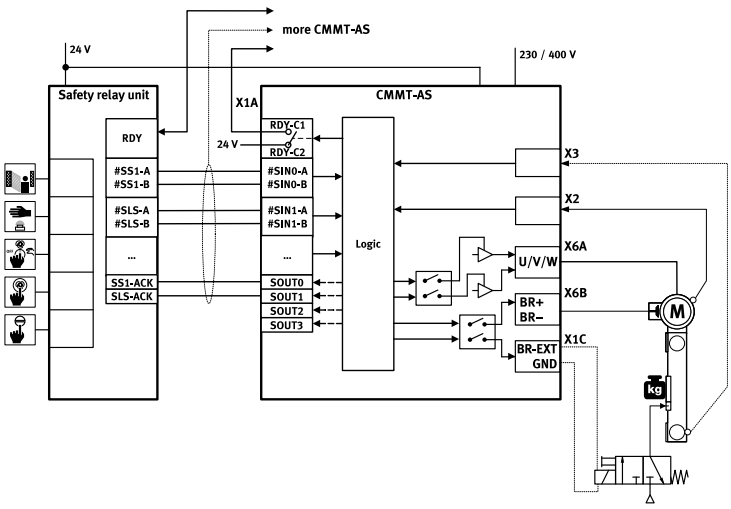

Fig. 8: Connection example with safety relay unit

ⓘ

Complete information on the safety sub-functions ➔ Manual Safety sub-functions.

7.8 Interfaces

Observe the requirements for mating plugs ➔ Manual Assembly, Installation.

7.8.1 [X1A], inputs and outputs for the higher-order PLC

The I/O interface [X1A] is located on the top of the device.
The inputs and outputs of this I/O interface are used for coupling to a higher-order PLC. The safety-related inputs and outputs are connected to a safety relay unit.

[X1A]	Pin	Function	Description
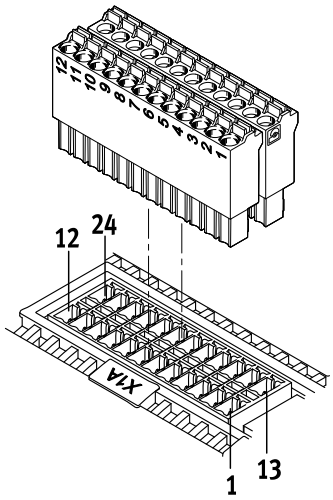	24	RDY-C1	Normally open contact: ready for operation message (Ready)
	23	RDY-C2	
	22	SOUT0	Feedback on configurable input 0
	21	SOUT1	Feedback on configurable input 1
	20	SOUT2	Feedback on configurable input 2
	19	SOUT3	Feedback on configurable input 3
	18	SIN4	single-channel configurable input 4 (non-inverted)
	17	GND	Reference potential
	16	TRG0	fast output for trig-gering external components, channel 0
	15	TRG1	like TRG0, but channel 1
	14	CAP0	fast input for position detec-tion, channel 0
	13	CAP1	like CAP0, but channel 1
	12	#SIN0-A	2-channel configurable input 0, channel A
	11	#SIN0-B	2-channel configurable input 0, channel B
	10	#SIN1-A	2-channel configurable input 1, channel A
	9	#SIN1-B	2-channel configurable input 1, channel B
	8	#SIN2-A	2-channel configurable input 2, channel A
	7	#SIN2-B	2-channel configurable input 2, channel B
	6	#SIN3-A	2-channel configurable input 3, channel A
	5	#SIN3-B	2-channel configurable input 3, channel B
	4	ERR-RST	functional and safety-related error acknowledgment
	3	CTRL-EN	Power stage enable
	2	AIN0	Differential analogue input
	1	#AIN0	

Tab. 16: Inputs and outputs for the higher-order PLC with the CMMT-AS-...-S3

Requirements for the connecting cable	Single device	Device com-pound
Shielding	unshielded	
Min. conductor cross-section incl. plastic wire ferrule	0.25 mm²	–
Max. conductor cross-section including plastic wire ferrule	0.75 mm²	–
Min. conductor cross-section including double plastic wire ferrule	–	0.25 mm²
Max. conductor cross-section including double plastic wire ferrule	–	0.5 mm²
Max. length	3 m	0.5 m

Tab. 17: Requirements for the connecting cable

7.8.2 [X1C], inputs and outputs for the axis

The I/O interface [X1C] is located on the front of the device. This interface makes functional and safety-related inputs and outputs available for components on the axis. Output BR-EXT is used in conjunction with the safety sub-function Safe brake control ➔ Manual Safety sub-function.

[X1C]	Pin	Function	Description
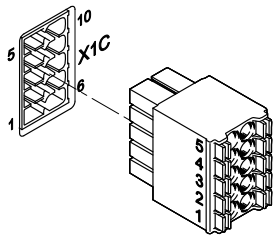	10	GND	Reference potential
	9	24V	Power supply output for sensors
	8	GND	Reference potential
	7	LIM1	Digital input for limit switch 1 (PNP logic, 24 V DC)
	6	LIM0	Digital input for limit switch 0 (PNP logic, 24 V DC)
	5	GND	Reference potential
	4	24 V	Power supply output for sensors
	3	–	reserved, do not connect
	2	REF-A	Digital input for refer-ence switch (PNP logic, 24 V DC)
	1	BR-EXT	Output for connecting an external clamping unit

Tab. 18: Inputs and outputs for the axis

Cable requirements	
Shielding	Unshielded/shielded[1)]
Min. conductor cross-section including plastic wire end sleeve	0.25 mm²
Max. conductor cross-section including plastic wire end sleeve	0.75 mm²
Max. length	50 m

1) For safety-related applications, use a shielded cable outside the control cabinet. Otherwise, a shield is not absolutely essential, but is recommended.

Tab. 19: Cable requirements

Requirements for the shield support

Connecting the shield

1. On the device side, connect the cable shield to the shield clamp for the motor cable.
2. On the machine side, connect the cable shield to an earthed machine part.

7.8.3 [X2], encoder interface 1

The encoder interface [X2] is located on the front panel of the device. The encoder interface [X2] is primarily designed for connecting the position encoder integrated into the motor.

Supported standards/protocols	Supported encoders
Hiperface	SEK/SEL 37 SKS/SKM 36
EnDat 2.2	ECI 1118/EBI 1135 ECI 1119/EQI 1131 ECN 1113/EQN 1125 ECN 1123/EQN 1135
EnDat 2.1	Only in combination with Festo EMMS-AS series motors that have an integrated encoder with EnDat 2.1 protocol
BiSS-C	Absolute encoders with BiSS interface that support the BiSS-C protocol
Digital incremental encoders with square-wave signals and with RS422-compatible signal output (differential A, B, N signals)	ROD 426 or compatible
Analogue SIN/COS incremental encoders with differen-tial analogue signals with 1 V_{ss}	HEIDENHAIN LS 187/LS 487 (20 µm signal period) or compatible
Encoders with asynchronous two-wire communication interface (RS485)	Nikon MAR-M50A or compatible (18 bit data frames)

Tab. 20: Standards and protocols supported by the encoder interface [X2]

NOTICE

Damage to the sensor when sensor type is changed.

The servo drive can provide 5 V or 10 V sensor supply. Through configuration of the sensor, the supply voltage is established for the sensor. The sensor can be damaged if the configuration is not adjusted before connection of another sensor type.

- When changing the sensor type: Comply with specified steps.

Change of encoder type

1. Disconnect encoder from the device.
2. Set up and configure new encoder type in the CMMT-AS.
3. Save settings in the CMMT-AS.
4. Switch off CMMT-AS.
5. Connect new encoder type.
6. Switch CMMT-AS back on.

Requirements for the connecting cable	
Characteristics	– Encoder cable for servo drives, shielded – Optical shield cover > 85% – Separately twisted signal pairs – Recommended design: (4 x (2 x 0.25 mm²))[1)]
Max. cable length	50 m

1) In the case of encoders with no compensation for voltage drops or in the case of very long cables, thicker supply cables may be required.

Tab. 21: Requirements for the connecting cable

Requirements for the shield support

Connecting the encoder cable shield

1. On the device side, connect the encoder cable shield to the plug housing.

2. On the motor side, connect the encoder cable shield to the encoder or encoder plug.

7.8.4 [X3], encoder interface 2

The encoder interface [X3] is located on the front panel of the device. The encoder interface [X3] primarily serves to connect a second position encoder to the axis (e.g. to enable precise positioning control for the axis or as a redundant measuring system for safe motion monitoring).

Supported standards/protocols	Supported encoders
Hiperface	➔ 7.8.3 [X2], encoder interface 1
Digital incremental encoders	
Analogue SIN/COS incremental encoders	

Tab. 22: Standards and protocols supported by the encoder interface [X3]

[X3] is designed to be electrically compatible with [X2] but does not support all encoders and functions like [X2].

7.8.5 [X10], SYNC IN/OUT

The interface [X10] is located on the front panel of the device. The interface [X10] permits master-slave coupling. In the master-slave coupling, the axes of several devices (slave axes) are synchronised via a device (master axis). The SYNC interface can be configured for different functions and can be used as follows:

Possible functions	Description
Incremental encoder output	Output of a master axis that emulates encoder signals (encoder emulation)
Incremental encoder input	Input of a slave axis for receiving the encoder signals of a master axis

Tab. 23: Possible functions of the connection [X10]

Requirements for the connecting cable	
Characteristics	– Encoder cable for servo drives, shielded – Optical shield cover > 85% – Separately twisted signal pairs – recommended design: (4 x (2 x 0.25 mm²))
Max. cable length	3 m

Tab. 24: Requirements for the connecting cable

Requirements for the shield support
Connect the connecting cable shield to the plug housings on both sides.

Possible connections

Connection possibilities	Description
Direct connection of 2 devices	Two devices can be connected directly with a patch cable (point-to-point connection). Recommendation: use patch cable of category Cat 5e; maximum length: 25 cm
Connection of multiple devices via RJ45 T adapter and patch cables	A maximum of 16 devices may be connected. Recommendation: use T adapter and patch cables of category Cat 5e; maximum length per cable: 25 cm
Connection of multiple devices via patch cables and a connector box (accessories ➔ www.festo.com/catalogue)	A maximum of 16 devices may be connected. Recommendation: use patch cables of category Cat 5e; maximum length per cable: 100 cm

Tab. 25: Connection possibilities

7.8.6 [X18], standard Ethernet

The interface [X18] is located on the front panel of the device. The following can be performed via the interface [X18] using the commissioning software:
– Diagnostics
– Parameterisation
– Controller
– Firmware updates
The interface is designed to conform to the standard IEEE 802.3. The interface is electrically isolated and intended for use with limited cable lengths ➔ Tab. 26 Requirements for the connecting cable. For this reason, the insulation coordination approach differs from IEEE 802.3 and must conform instead to the applicable product standard IEC 61800-5-1.

Requirements for the connecting cable	
Characteristics	CAT 5, patch cable, double shielded
Max. cable length	30 m

Tab. 26: Requirements for the connecting cable

The following connections are possible via the Ethernet interface:

Connections	Description
Point-to-point connection	The device is connected directly to the PC via an Ethernet cable.
Network connection	The device is connected to an Ethernet network.

Tab. 27: Options for connection

The device supports the following methods of IP configuration (based on IPv4):

Methods	Description
Obtain IP address automatically (DHCP client)	The device obtains its IP configuration from a DHCP server in the network. This method is suitable for networks with a DHCP server installed.
Fixed IP configuration	The device uses a fixed IP configuration. The IP configuration of the device can be permanently assigned manually. However, the device can only be addressed if the assigned IP configuration matches the IP configuration of the PC. Factory setting: 192.168.0.1

Tab. 28: Options for IP configuration

7.8.7 [X19], Real-time Ethernet (RTE) port 1 and port 2

The interface [X19] is located on the top of the device. The interface [X19] permits RTE communication. The following protocols are supported by the interface [X19]:

Product variant	Supported protocol
CMMT-AS-...-MP-S3	EtherCAT, EtherNet/IP, Modbus TCP, PROFINET ➔ 4.3 Setting bus protocol

Tab. 29: Supported protocols

The physical level of the interface fulfils the requirements according to IEEE 802.3. The interface is electrically isolated and intended for use with limited cable lengths ➔ Tab. 30 Requirements for the connecting cable.
The interface [X19] offers 2 ports.
– Port 1, labelled on the device with [X19, XF1 IN]
– Port 2, labelled on the device with [X19, XF2 OUT]
2 LEDs are integrated into each of the two RJ45 bushings. The behaviour of the LEDs depends on the bus protocol. Both LEDs are not always used.

Requirements for the connecting cable	
Characteristics	CAT 5, patch cable, double shielded
Max. cable length	30 m

Tab. 30: Requirements for the connecting cable

7.9 Motor connection

7.9.1 [X6A], motor phase connection

The connection [X6A] is located on the front of the device. The following connections to the motor are established via the connection [X6A]:
– Motor phases U, V, W
– PE connection

Incorrect circuitry of PE and motor phases results in a device defect, jerking or uncontrolled start-up of the motor when the power supply is switched on.

[X6A]	Pin	Function	Description
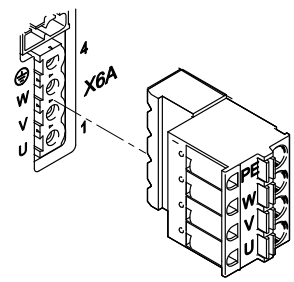	4	PE	Protective earthing, motor
	3	W	third motor phase
	2	V	second motor phase
	1	U	first motor phase

Tab. 31: Motor phase connection

The cable shield of the motor cable must be placed on the support surface on the bottom front of the housing and fastened with the shield clamp.

Requirements for the connecting cable	
Wires and shielding	– 4 power wires, shielded – optional additional cables, e.g. for the holding brake (shielded separately) and the motor temperature sensor (shielded separately)
Design	Only use cables that ensure reinforced isolation between the motor phases and the shielded signals of the holding brake and motor temperature sensor in accordance with IEC 61800-5-1. ➔ 7.9.4 Shield support of the motor cable
Max. cable length	➔ 7.6 Information on EMC-compliant installation
Max. capacitance	< 250 pF/m
Nominal cross section of power wires	0.75 mm² … 1.5 mm²
Cable diameter of the stripped cable or shield sleeve (clamping range of the shield clamp)	11 mm … 15 mm
The only motor cables permitted are those that fulfil the requirements of EN 61800-5-2 Annex D.3.1 and the requirements of EN 60204-1.	

Tab. 32: Requirements for the connecting cable

Festo offers prefabricated motor cables as accessories ➔ 3 Additional information.

– Only use motor cables that have been approved for operation with the Festo servo drive. Motor cables of other manufacturers are permitted if they meet the specified requirements.

7.9.2 [X6B], motor auxiliary connection

The connection [X6B] is located on the front of the device. The holding brake of the motor and the motor temperature sensor can be connected to the connection [X6B]. The output for the holding brake is controlled both functionally and by the safety part for the Safe brake control safety sub-function. The safety part has priority in the event of a request (switching off the output) ➔ Manual Safety sub-function.
To allow motor temperature monitoring, the following are supported:
– N/C and N/O contacts
– KTY 81 … 84 (silicon temperature sensors)
– PTC (PTC resistor, positive temperature coefficient)
– NTC (NTC resistor, negative temperature coefficient)
– Pt1000 (platinum measuring resistor)
The servo drive monitors whether the motor temperature violates an upper or lower limit. With switching sensors, only the upper limit value can be monitored (e.g. with a normally closed contact). The limit values and the error response can be parameterised.

[X6B]	Pin	Function	Description
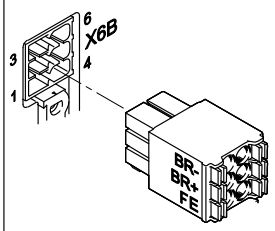	6	MT–	Motor temperature (negative potential)
	5	MT+	Motor temperature (positive potential)
	4	FE	Functional earth connected to protective earth
	3	BR–	Holding brake (negative potential)
	2	BR+	Holding brake (positive potential)
	1	FE	Functional earth connected to protective earth

Tab. 33: Motor auxiliary connection

Requirements for the connecting cable	
Design	– 2 wires for the line to the holding brake, twisted in pairs, separately shielded – 2 wires for the line to the temperature sensor, twisted in pairs, separately shielded
Min. conductor cross-section including plastic wire end sleeve	0.25 mm²
Max. conductor cross-section including plastic wire end sleeve	0.75 mm²
Max. length	50 m[1)]

1) With cable lengths > 25 m, take account of the voltage drop on the cables by selecting appropriate wire cross sections.

Tab. 34: Requirements for the connecting cable

Requirement for the temperature sensor in the motor
– electrically reinforced isolation from the motor phases in accordance with IEC 61800-5-1, voltage class C, overvoltage category III.

Requirements for the shield support
– Connect the cable shield on both sides.
– Make unshielded cable ends as short as possible (recommended 120 mm, max. 200 mm).

7.9.3 Electronic overload and over temperature protection for the motor

The CMMT-AS allows the motor to be electronically protected against overload and provides over temperature protection with the following protective functions:

Protective functions	Description	Measures required during installation and commissioning
Temperature monitoring of the motor	The motor temperature is monitored for an upper and lower limit value, including hysteresis. The limit values can be parameterised.	– Connect the temperature sensor to connection [X6B] (both switching and analogue temperature sensors are supported) – Parameterise the temperature limit values in accordance with the type of motor used, e.g. using the device-specific plug-in. Comply with the permissible limit values of the motor.
Electronic current limiting and I²t monitoring of the motor current	The motor current is monitored electronically and limited in accordance with the limit values specified in the standard ➔ EN 61800-5-1, Tab. 29. Motor currents and I²t time constant can be parameterised.	– Parameterise the nominal current, maximum current and I²t time constant of the motor, e.g. using the device-specific plug-in.
Thermal memory in the event of motor switch-off	Supported, not parameterizable	– None
Thermal memory in the event of a power supply failure		
Speed-sensitive overload protection	Parameterisable	– Parameterise I²t monitoring with speed-dependent scaling, e.g. with the device-specific plug-in. Such as for: – Synchronous servo motors (lower permissible current at high rotational speed) – Fan motors (lower permissible current at low rotational speed)

Tab. 35: Protective functions for the motor

The specified parameters are preset for Festo motors. The parameters can be adapted in the plug-in.

7.9.4 Shield support of the motor cable

Requirements for the motor cable shield support on the device side
The type of shield support depends on the design of the motor cable. For example, if a hybrid cable is used to connect the motor, holding brake and temperature sensor, the following options are available for connecting the shield on the device side:
Option 1: all motor cable shields are jointly connected over a wide surface area using a shield sleeve at the cable end and are connected below the shield clamp on the front of the CMMT-AS.

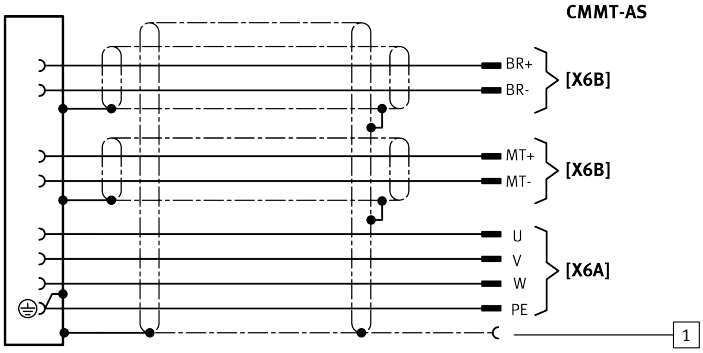

Fig. 9: Joint shield support for all cable shields, example

1 Shield sleeve

Option 2: the outside shield of the motor cable is connected separately over a wide surface area below the shield clamp on the front of the CMMT-AS. The inside shields are connected separately to the designated FE pin of the connection [X6B].
• Make unshielded cable ends as short as possible.

Mounting the shield clamp
The lower section on the front of the housing is used as a shield support surface. The shield support surface, together with the shield clamp, allows the motor cable shield to be connected over a wide surface area.

1. Using the shield clamp, press the motor cable shield or the conductive shield end sleeve of the motor cable onto the shield support surface of the housing ➔ Fig. 10.
2. Use a size T20 TORX screwdriver to tighten the retaining screws (2x) of the shield clamp. Pay attention to the clamping range and observe the tightening torque specified below.

Property	Value	Comment
Clamping range	11 mm … 15 mm	Diameter of the stripped cable or shield sleeve
Tightening torque for the retaining screws in the case of block mounting	1.8 Nm ± 15 %	In the case of block mounting, the shield clamp makes full contact with the base of the housing (cable diameter 11 mm)
Minimum tightening torque with larger cable diameter (> 11 mm … 15 mm)	0.5 Nm ± 15 %	Make sure that a greater tightening torque does not crush the connecting cable in the clamping area by excessive pressure.

Tab. 36: Tightening torque and clamping range

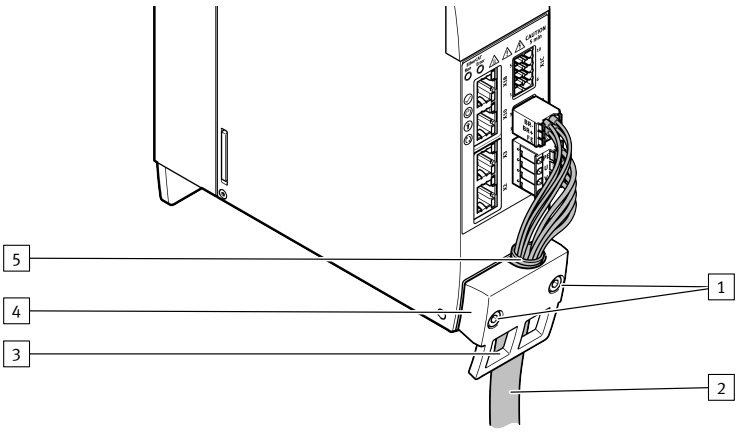

Fig. 10: Shield clamp of the motor cable

1 Retaining screws of the shield clamp (2x)
2 Motor cable
3 Cut-out for mounting cable binders (2x)
4 Shield clamp
5 Motor cable shield connected over a large surface area below the shield clamp

Motor cable shield support on the motor side
Detailed information on the motor-side connection with Festo motor cables
➔ Assembly instructions for the motor cable ➔ www.festo.com/sp.
- Connect all shields to the PE over a wide surface area on the motor side, e.g., by means of the shield connection provided on the motor connector or the shield support surface in the motor junction box.

7.10 Power and logic voltage supply

7.10.1 [X9A], power supply and DC link circuit connection

Supply of the control unit (logic voltage supply)

⚠ WARNING

Risk of injury due to electric shock.
- For the electrical power supply with extra-low voltages, use only PELV circuits that guarantee a reinforced isolation from the mains network.
- Observe IEC 60204-1/EN 60204-1.

- Only connect PELV circuits with an output current of max. 25 A. Otherwise, use a separate external fuse: 25 A.

Power supply and DC link circuit connection

ⓘ

The connections for the logic voltage supply, the power voltage supply and the link circuit are not protected against wiring errors. The reversal of the connections results in a device defect during switch-on.
With cross-wiring, observe the polarity of the DC link connection on all devices.

NOTICE

Overvoltage due to asymmetrical mains load
If the neutral conductor has to be disconnected when the device is switched on and off, the device can be damaged by overvoltage due to an asymmetrical network load.
- Design the mains connection with fuse and main switch so that the neutral conductor is always switched on early and switched off later.

[X9A]	Pin	Function	Description
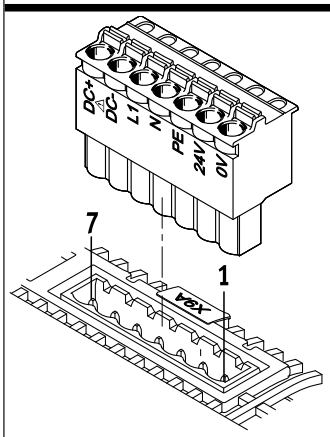	7	DC+	DC link circuit positive potential
	6	DC-	DC link circuit negative potential
	5	L1	Mains supply phase L1
	4	N	for 1-phase mains connection: mains supply neutral conductor for 2-phase mains connection: mains supply phase L2
	3	PE	Protective earthing
	2	24 V	positive potential of the 24 V logic voltage
	1	0 V	Reference potential of the 24 V logic voltage

Tab. 37: Power supply and DC link circuit connection

Requirements for the connecting cable	Single device	Device compound
Number of insulated wires and shielding	5 insulated wires, unshielded	without DC link coupling: 5 wires, unshielded with DC link coupling: 7 wires, unshielded
Min. conductor cross-section including plastic wire end sleeve	0.5 mm²	1 mm²
Max. conductor cross-section including plastic wire end sleeve	2.5 mm²	2.5 mm²
Max. length	2 m	≤ 0.5 m

Tab. 38: Requirements for the connecting cable

7.10.2 [X9B], connection for braking resistor

The connection [X9B] is located on the top of the device. The internal braking resistor or a suitable external braking resistor is attached to the connection [X9B].

[X9B]	Pin	Function	Description
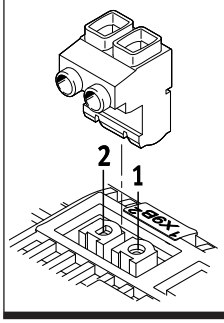	2	BR+Ch	Braking resistor positive connection
	1	BR-Ch	Braking resistor negative connection

Tab. 39: Connection for the braking resistor

Requirements for the connecting cables of external braking resistors	
Number of insulated wires and shielding	2 wires, shielded
Min. conductor cross section incl. wire end sleeve with plastic sleeve	0.25 mm²
Max. conductor cross section incl. plastic wire end sleeve	2.5 mm²
Max. cable length	2 m
Wiring	inside the control cabinet, shield connected to PE
Tightening torque of the screw terminals on the mating plug GIC 2.5 HCV/2-ST-7.62	0.5 ... 0.6 Nm[1)]

1) Specification of the manufacturer at the time the documentation was approved

Tab. 40: Requirements for the connecting cable

Selection of suitable braking resistors
Information on selecting suitable braking resistors ➔ Manual Assembly, Installation.

7.11 Cross-wiring

Cross-wiring makes it possible to set up a device compound consisting of up to 10 servo drives CMMT-AS. The different cross-wiring options are as follows:
– Cross-wiring of I/O signals at the connection [X1A]
– Cross-wiring of the mains and logic voltage supply without DC link coupling
– Cross-wiring of the mains and logic voltage supply with DC link coupling
Information on cross-wiring ➔ Manual Assembly, Installation and Manual Safety sub-function.

7.12 Installation of safety sub-functions

Depending on the parameterisation, the request for a safety sub-function can be made through safe digital inputs or a safe fieldbus.

ⓘ

Complete information on the safety sub-functions ➔ Manual Safety sub-functions.

8 Commissioning

8.1 Safety

⚠ WARNING

Risk of injury from electric shock in the event of incomplete insulation at the power connections [X6A], [X9A] and [X9B].
Before operating, plugging in or unplugging the operator unit CDSB or a connector from a hot-plug-capable interface, the following points must be fulfilled:
- The conducting lines at the device are completely insulated.
- The protective earthing (PE) and the shield connection are correctly connected to the device.
- The housing is free of damage.

⚠ WARNING

Severe, irreversible injuries from accidental movements of the connected actuator technology.
Unintentional movements of the connected actuator technology can result from exchanging the connecting cables of a servo drive or between servo drives.
- Before commissioning: all cables must be correctly assigned and connected.

⚠ WARNING

Risk of injury from electric shock.
Contact with live parts at the power connections [X6A], [X9A] and [X9B] can result in severe injuries or death.
- Do not pull out power supply plugs while live.
- Before touching, wait at least 5 minutes after switching off the load voltage to allow the intermediate circuit to discharge.

NOTICE

During commissioning: Keep the range of movement of the connected actuators clear, so that no persons are endangered.

NOTICE

Unauthorised Access to the Device Can Cause Damage or Malfunction.
- When connecting the device to a network, protect the network from unauthorised access.
  Standards for security in information technology can be used for network protection measures, e.g. IEC 62443, ISO/IEC 27001.

Use of the safety functions

⚠ WARNING

Risk of serious irreversible injuries
There is a risk of serious irreversible injuries due to incorrect parameterisation or incorrect integration of the safety sub-functions.
Commission the device only if:
- The assembly and wiring has been checked and found correct.
- All safety sub-functions are fully parameterised.

The correct parameterisation and integration as well as compliance with the requirements for the safety functions must be confirmed by validation.

NOTICE

Observe measures to avoid systematic failures during the integration of the PDS in accordance with EN ISO 13849-1:
- Functional test
- Project management
- Documentation
- Execution of a black-box test

1. Analyse and design the system with reference to hazards (risk assessment).
2. Make sure that each safety function of the system is analysed and validated. It is the responsibility of the operator to determine and verify the required safety classification (safety integrity level, performance level and category) of the system.
3. Commission the servo drive and validate the response of the safety function during the test run.

Prior to commissioning
- Check the electrical installation, in particular the correct allocation of the motor cable (phases).
- Safety sub-functions may still be incorrectly parameterised and integrated during commissioning. This may result in hazardous movements. Ensure that the resulting movement of the system does not endanger persons.
  Recommendation: use basic stop functions such as STO or SBC during commissioning.

8.2 Preparation for commissioning

For initial commissioning, you will need to have the Festo Automation Suite software installed along with the CMMT-AS plug-in ➔ www.festo.com/sp.

Prepare for commissioning as follows:
1. Check the wiring of the CMMT-AS.
   With the CMMT-AS-...-MP, check the switch setting for the selection of the bus protocol ➔ 4.3 Setting bus protocol.
2. Install the Festo Automation Suite plus CMMT-AS plug-in on the PC.
3. Create a project and add CMMT-AS device.
4. Establish the connection to the CMMT-AS and set network configuration.
5. Identify the technical data of the components that is required for configuration.

8.3 Commissioning steps

NOTICE

Unwanted drive movements or damage to components.
Incorrect parameterisation may result in unwanted drive movements or overload when the closed-loop controller is enabled or may lead to connected components becoming overloaded or damaged.
- Do not enable the closed-loop controller until the configured components (servo drive, motor, axis, etc.) match those that are connected exactly.

During initial commissioning with the Festo Automation Suite with the CMMT-AS plug-in installed, the following steps must be performed, for example:
1. Perform configuration and parameterisation with the CMMT-AS plug-in (hardware configuration, critical limits and parameters).
2. When using safety sub-functions, they must be fully parameterised, verified, validated and documented ➔ Manual Safety sub-function.
3. Check signal behaviour of the digital inputs/outputs (e.g. limit/reference switch).
4. Provide required control signals.
5. Check direction of rotation/direction of travel of the electromechanical drive (e.g. in jog operation).
6. Carry out homing.
7. Test positioning behaviour (test mode, ➔ help for the CMMT-AS plug-in).
8. If necessary, optimise controller setting (optional, ➔ help for the CMMT-AS plug-in).
9. Perform fieldbus configuration and test control profile (➔ description of the device profile used).
10. Complete commissioning (e.g. save project with Festo Automation Suite and archive project).

9 Operation

Check the safety functions at adequate intervals for proper functioning. It is the responsibility of the operator to choose the type and frequency of the checks within the specified time period. The manner in which the test is conducted must make it possible to verify that the safety device is functioning perfectly in interaction with all components. Period for cyclical test ➔ 13.1 Technical data, safety engineering.
The CMMT-AS is maintenance-free during its period of use and the specified service life.

10 Maintenance and care

If used as intended, the product is maintenance-free.

10.1 Cleaning

⚠ WARNING

Risk of injury from electric shock.
Contact with live parts at the power connections [X6A], [X9A] and [X9B] can result in severe injuries or death.
- Do not pull out power supply plugs while live.
- Before touching, wait at least 5 minutes after switching off the load voltage to allow the intermediate circuit to discharge.

- Clean the outside of the product with a soft cloth.

11 Malfunctions

11.1 Diagnostics via LED

LEDs for indicating status information are on the front and top of the device. The number of LEDs depends on the product design. There are up to 11 LEDs on the front of the device. There are up to 4 LEDs on the top of the device at connections [X19], XF1 IN and XF2 OUT.

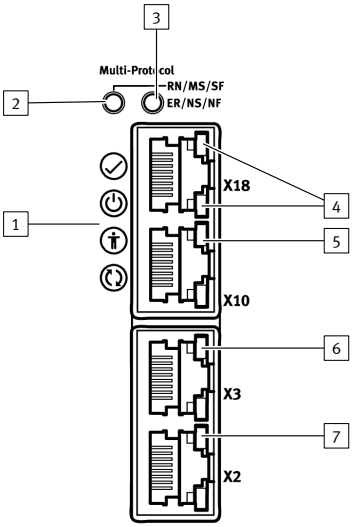

1 Device status (4 LEDs)
2 RN/MS/SF (example CMMT-AS-...-MP)
3 ER/NS/NF (example CMMT-AS-...-MP)
4 Ethernet interface activated and communication activity [X18]
5 Sync interface activated [X10]
6 Encoder status, encoder interface [X3]
7 Encoder status, encoder interface [X2]

Fig. 11: LEDs on the front

11.1.1 Device status displays

LED	Designation	Brief description
✓	Status LED	Indicates the general device status
⏻	Power LED	Indicates the status of the power supply
🚹	Safety LED	Indicates the status of the safety equipment
↻	Application status LED	Indicates the identification sequence and is reserved for future extensions

Tab. 41: Device status LEDs (status, power, safety and application status LEDs)

✓ Status LED, display of the device status

LED	Meaning
fast red flashing	Unexpected exception error. – Restart device – Service case
flashing red	An error is pending.
Flashing orange	The servo drive is currently performing a firmware update.
flashing yellow	A warning is pending.
yellow light	The servo drive is in the initialisation phase.
flashing green	The servo drive is ready, and the power stage is switched off (Ready).
green light	The power stage and the closed-loop controller are enabled.

Tab. 42: Status LED

⏻ Power LED, status of the power supply

LED	Meaning
flashing yellow	The logic voltage and AC supply are present. The intermediate circuit is being charged.
yellow light	The logic voltage supply is present, but the AC supply is lacking.
green light	The logic voltage supply is present, and the intermediate circuit is charged.

Tab. 43: Power LED

Safety LED, status of the safety engineering

LED	Meaning
flashing red	Error in the safety part or a safety condition has been violated.
flashing yellow	The safety sub-function has been requested but is not yet active.
yellow light	The safety sub-function has been requested and is active.
flashing green	Parameterisation operating mode of the safe parameters. The control of the power stage is not possible (STO active); the brake outputs are in the safe state (SBC active).
green light	Ready, a safety sub-function has not been requested.

Tab. 44: Safety LED

11.2 Repair

Repair or maintenance of the product is not permissible. If necessary, replace the complete product.

1. If there is an internal defect: Always replace the product.
2. Send the defective product unchanged, together with a description of the error and application, back to Festo.
3. Check with your regional Festo contact person to clarify the conditions for the return shipment.

12 Disassembly

Disassemble in reverse order of mounting.

Before disassembly

1. Switch off the power supply at the main switch.
2. Secure the system against accidental reactivation.
3. Wait at least 5 minutes until the intermediate circuit has discharged.
4. Let the device cool down to room temperature.
5. Before touching the power connections [X6A], [X9A], [X9B], check to ensure they are free of voltage.
6. Disconnect all electrical cables.

For disassembly of the device

- Loosen retaining screws (2x) and remove the device from the mounting surface.

13 Technical data

13.1 Technical data, safety engineering

13.1.1 Approval information

Approval information, safety engineering	
CE	
Type-examination	The functional safety engineering of the product has been certified by an independent testing body, see EC-type examination certificate ➔ www.festo.com/sp
Certificate issuing authority	TÜV Rheinland, Certification Body of Machinery, NB 0035
Certificate no.	01/205/6032.00/25

Tab. 45: Approval information, safety engineering

13.1.2 Safety reference data

The achievable safety reference data of the safety sub-functions of the CMMT-AS-...-S3 depend on the safety sub-function, the encoders and the holding brakes. The safety reference data shown in the following tables ➔ 47, ➔ 48 and ➔ 50 refer to the safety subsystem servo drive CMMT-AS-...-S3.
The tables ➔ 49 and ➔ 51 show the maximum achievable safety ratings of the CMMT-AS-...-S3 together with connected encoders and brakes in various combinations.

ⓘ

In addition to the CMMT-AS-...-S3 and the connected brakes and encoders, safety functions generally consist of a number of other subsystems, such as safe controllers and sensors. The safety reference data and the classification (PL/SIL) of the complete safety function must be determined including all involved subsystems, the CMMT-AS-...-S3 and the safety reference data of the connected sensors and brakes.

The failure rates in the safety reference data have been calculated for an ambient device temperature of 40 °C. Increased failure rates must be applied for 50 °C (with output power derating).
The increased failure rates can be calculated by multiplying by a factor of 2 for PFH.

ⓘ

Additional information ➔ Manual Safety sub-functions

13.1.3 General safety parameters

General reference data of the safety-relevant subsystems of the CMMT-AS-...-S3:

General safety reference data for CMMT-AS-...-S3	
Reaction times	Depending on the safety sub-function and the parameterisation ➔ Manual Safety sub-functions
Request rate in accordance with EN 61508	High request rate
Operating life (mission time) in accordance with EN ISO 13849-1, T_M [a]	20

Tab. 46: General safety reference data for CMMT-AS-...-S3

13.1.4 Safety sub-functions without motion monitoring and without brake control

Safety sub-functions STO, SS1-t	
Without Safe brake control (SBC)	
Safety sub-function in accordance with EN 61800-5-2	Safe torque off (STO)
	Safe stop 1 time controlled (SS1-t)
Safety integrity level in accordance with EN 61508	Max. SIL 3
Probability of dangerous failure per hour in accordance with EN 61508, PFH [1/h]	$< 0.8 * 10^{-9}$
Hardware fault tolerance in accordance with EN 61508, HFT	1
Category in accordance with EN ISO 13849-1	Max. Cat. 4
Performance level in accordance with EN ISO 13849-1	Max. PL e

Tab. 47: Safety sub-functions STO, SS1-t without SBC

13.1.5 Safety sub-functions without motion monitoring and with brake control

Safety sub-functions SBC, STO + SBC, SS1-t + SBC		
Brake control via	BR+/– and BR-EXT (both outputs)	BR+/– or BR-EXT (one output)
Safety sub-function in accordance with EN 61800-5-2	Safe brake control (SBC)	
	Safe torque off (STO) + Safe brake control (SBC)	
	Safe stop 1 time controlled (SS1-t) + Safe brake control (SBC)	
Safety integrity level in accordance with EN 61508	Max. SIL 3	Max. SIL 3
Probability of dangerous failure per hour in accordance with EN 61508, PFH [1/h]	$< 0.9 * 10^{-9}$	$< 0.9 * 10^{-9}$
Hardware fault tolerance in accordance with EN 61508, HFT	1	1
Category in accordance with EN ISO 13849-1	Max. Cat. 4	Max. Cat. 3
Performance level in accordance with EN ISO 13849-1	Max. PL e	Max. PL e
Note on classification	Note restrictions depending on the number of brakes used ➔ Tab. 49 Maximum achievable safety reference data with connected brakes	

Tab. 48: Safety sub-functions SBC, STO + SBC, SS1-t + SBC

Maximum achievable safety reference data with connected brakes				
Brake on		Classification		Notes and requirements
BR+/–	BR-EXT	Cat./PL	SIL	
Yes	No	Cat. 1, PL c	SIL 1	The BR+/– output is tested in the switched-on state by a plausibility check and by test pulses for a short circuit from BR+ to 24 V, BR– to 0 V or BR+ to BR–.
				Maximum duration in the switched off (requested) state: 3 months.
No	Yes	Cat. 1, PL c	SIL 1	When switched on, the BR-EXT output is tested for a short circuit to 24 V or 0 V by a plausibility check and test pulses. A fault exclusion for “conductor/cable short circuit” and for “multipole plug connectors” is required[1].
				Maximum duration in the switched off (requested) state: 3 months.
Yes	Yes	Cat. 3, PL e	SIL 3	The information and requirements of the previous cases with only one brake apply. A regular brake test may be necessary.
Yes	Yes	Cat. 4, PL e	SIL 3	The information and requirements of the previous cases with only one brake apply with the following addition: Further considerations in accordance with EN ISO 13849-1 are required to achieve Category 4 with reference to the connected brakes. In addition to achieving the required failure probability and the required diagnostic coverage (DC), this includes, among other things, analysis of the accumulation of undetected errors in the connected brakes. A regular brake test may be necessary.
				Maximum time in the switched off (requested) state: 1 day.

1) See standard ISO 13849-2 Table D.4 and EN 61800-5-2, section D.3.4

Tab. 49: Maximum achievable safety reference data with connected brakes

Information on the requirements

- With reference to the classification of the brake control in general: the reference data in table ➔ 48 shows maximum values.
- For maximum dwell time:
  The brake output is switched off when the SBC function is requested and can no longer be tested internally. Therefore, the maximum dwell time for a requested SBC is limited to 3 months for Cat. 3 / PL e. After this time, the servo drive switches to an error status. The error status can only be cancelled by testing the safety sub-function SBC.
  The monitoring interval must be reduced to 1 day by changing the parameterisation in order to achieve Category 4.

13.1.6 Safety sub-functions with motion monitoring and with or without brake control

Safety sub-functions SLS, SOS, SS1-r, SS2-r, SS2-t, SMS		
Encoder evaluation ➔ Table 51	Case E5, E6	Case E2, E3
Safety sub-function in accordance with EN 61800-5-2	Safe operating stop (SOS)	
	Safe stop 1 ramp monitored (SS1-r) with or without Safe brake control (SBC)	
	Safe stop 1 time controlled (SS2-t)	
	Safe stop 1 ramp monitored (SS2-r)	
	Safely-limited speed (SLS)	
Function defined by Festo	Safe maximum speed (SMS)	
Safety integrity level in accordance with EN 61508	Max. SIL 3	Max. SIL 3
Probability of dangerous failure per hour in accordance with EN 61508, PFH [1/h]	$< 1.3 * 10^{-9}$	$< 3.0 * 10^{-9}$
Hardware fault tolerance in accordance with EN 61508, HFT	1	1
Category in accordance with EN ISO 13849-1	Max. Cat. 3	Max. Cat. 3
Performance level in accordance with EN ISO 13849-1	Max. PL e	Max. PL e
Note on classification	Consider restrictions depending on the type and number of encoders in use ➔ Tab. 51 Maximum achievable safety reference data with connected sensors For SS1-r with brake control: note restrictions depending on the number of brakes in use ➔ Tab. 49 Maximum achievable safety reference data with connected brakes	

Tab. 50: Safety sub-functions SLS, SOS, SS1-r, SS2-r, SS2-t, SMS

Maximum achievable safety reference data with connected sensors					
Case	Encoder on [X2]	Encoder on [X3]	Cat./PL	SIL	Notes and requirements
E2	Non-safe encoder with computer interface (e.g. EnDat-2.1/2.2 without SIL or Nikon)	Incremental encoder with square wave outputs	Cat. 3, PL e	SIL 3	Maximum dwell time at standstill: 3 months[1]
E3	SIN/COS encoder	Incremental encoder with square wave outputs	Cat. 3, PL e	SIL 3	The installed encoders must have a diverse structure.
					Maximum dwell time at standstill: 3 months[1]
E5	Safe EnDat-2.2 encoder	Incremental encoder with square wave outputs	Cat. 3, PL e	SIL 3	Fault exclusion not required in accordance with EN 61800-5-2, section D.3.16.
E6	Safe EnDat-2.2 encoder	—	Cat. 3, PL e	SIL 3	Fault exclusion required in accordance with EN 61800-5-2, section D.3.16. For additional fault exclusions see ➔ 2.2.2 Permissible components

1) Interval in accordance with EN 61800-5-2, Section 6.2.2.1.4

Tab. 51: Maximum achievable safety reference data with connected sensors

Information on the requirements

- With reference to the classification of motion monitoring in general: the reference data listed in table ➔ 50 shows maximum values.
- For the use of non-safety-rated position encoder systems: the suitability of non-safe encoders for use in safe systems up to SIL 3 must be confirmed separately (e.g., sufficient diversity of the encoder systems with reference to CCF; sufficiently high MTTF value; suitability of the encoder systems for the actual operating and ambient conditions including EMC.

13.1.7 Diagnostic coverage of sensor systems

The following table shows the permissible encoder combinations and the diagnostic coverage (DC) for safe motion monitoring to be assumed for the encoders based on the fault models of EN 61800-5-2, Section D.3.16:

Case	Encoder on [X2]	Encoder on [X3]	Required fault exclusions	Diagnostic coverage (DC) for encoders on	
				[X2]	[X3]
E2	Non-safe encoder with computer interface (e.g., EnDat 2.1/2.2 without SIL or Nikon)	Incremental encoder with square wave outputs	–	99 %	99 %
E3	SIN/COS encoder	Incremental encoder with square wave outputs	–	99 %	99 %

Case	Encoder on [X2]	Encoder on [X3]	Required fault exclusions	Diagnostic coverage (DC) for encoders on	
				[X2]	[X3]
E5	Safe EnDat 2.2 encoder	Incremental encoder with square wave outputs	–	99 %	99 %
E6	Safe EnDat 2.2 encoder	–	EN 61800-5-2, Section D.3.16. For additional fault exclusions see ➔ 2.2.2 Permissible components.	99 %	–

Tab. 52: Diagnostic coverage of sensor systems

The manufacturer's specifications must also always be applied for a safety engineering assessment of the position encoder.
The DC values specified for the evaluation of the sensor systems in the safety module are only permissible if the specified fault exclusions and the mentioned requirements are observed ➔ Tab. 51 Maximum achievable safety reference data with connected sensors.
The conditions required for fault exclusion must be permanently guaranteed.

13.1.8 Safety reference data for PROFIsafe communication

For communication via the control interface PROFIsafe a PFH value of 1 * 10^{-9}/h must be added to the PFH values of the servo drive for SIL 3.

13.2 General technical data

General technical data		
Declaration of conformity		➔ www.festo.com/sp
Type ID code		CMMT-AS
Type of mounting		Mounting plate, attached with screws
Mounting position		Vertical, mounted on closed surface, free convection with unhindered air flow from bottom to top
Product weight	[kg]	CMMT-AS-C2-3A: 1,3 CMMT-AS-C4-3A: 1,4

Tab. 53: General technical data

Ambient conditions, transport		
Transport temperature	[°C]	–25 … +70
Relative humidity	[%]	5 … 95 (non-condensing)
Max. transportation duration	[d]	30
Permissible altitude	[m]	12000 (above sea level) for 12 h
Vibration resistant		Vibration test and free fall in packaging in accordance with EN 61800-2

Tab. 54: Ambient conditions, transport

Ambient conditions, storage		
Storage temperature	[°C]	–25 … +55
Relative humidity	[%]	5 … 95 (non-condensing)
Permissible altitude	[m]	3000 (above sea level)

Tab. 55: Ambient conditions, storage

Ambient conditions, operation		
Ambient temperature at nominal power	[°C]	0 … +40
Ambient temperature with derating (–3%/°C at 40°C … 50°C)	[°C]	0 … +50
Cooling		Via ambient air in the control cabinet
Temperature monitoring		Monitoring of: – Cooling element (power module) – Air in the device Switch-off if temperature is too high or too low
Relative humidity	[%]	5 … 90 (non-condensing), no corrosive media permitted near the device
Permissible setup altitude above sea level at nominal power	[m]	0 … 1000
Permissible setup altitude above sea level with derating (–10%/1000 m at 1000 m … 2000 m)	[m]	0 … 2000 Operation above 2000 m is not permitted!
Degree of protection in accordance with EN 60529		IP20 (with attached mating plug X9A and with intended mounting on closed backwall, otherwise IP10)
Requirements for installation space		Install in a control cabinet with at least IP54, design as “closed electrical operating area” in accordance with IEC 61800-5-1, Chap. 3.5
Protection class		I
Overvoltage category		III
Contamination level		2 (or better)

Ambient conditions, operation	
Vibration resistance in accordance with	IEC 61800-5-1 and EN 61800-2
Shock resistance in accordance with	EN 61800-2

Tab. 56: Ambient conditions, operation

Service life		
Service life of the device with rated load in S1 operation[1] and 40°C ambient temperature	[h]	25000
Service life of the device at < 50 % rated load in S1 operation[1] and 40 °C ambient temperature	[h]	50000

1) Continuous operation with constant load

Tab. 57: Service life

13.3 Technical data, electrical

13.3.1 Load and logic voltage supply [X9A]

Electrical data, load voltage supply [X9A]			
CMMT-AS		C2-3A	C4-3A
Number of phases		1	
Voltage range	[V AC]	100 – 20 % … 230 + 15 %	
Nominal operating voltage	[V AC]	230	
System voltage in accordance with IEC 61800-5-1	[V AC]	300	
Mains current consumption[1] at nominal power approx.	[A_{RMS}]	2.8	5.6
Mains frequency	[Hz]	48 … 62	
Network connection/allowed mains types of system earthing		L ➔ N: TT, TN, IT L1 ➔ L2: TT, TN	
Required quality of the mains supply		Corresponds to the requirements of EN 61800-3, if not specified otherwise	
Short circuit current rating (SCCR)	[kA]	100	
Alternative DC supply feed[2]	[V DC]	80 … 360	

1) dependent on mains impedance; if a line choke is used, the mains currents are slightly lower
2) Parameterisation required ➔ Manual/online help plug-in, software, function, fieldbus, device profile

Tab. 58: Load voltage supply

Electrical data, logic voltage supply			
CMMT-AS-		C2-3A	C4-3A
Logic voltage range	[V DC]	24 ± 20 %	
Nominal voltage	[V DC]	24	
Starting current (with 28.8 V)	[A]	< 20	
Protective functions		– Polarity reversal – Short circuit to 0 V (24 V outputs)	
Current consumption (without holding brake, CDSB, digital I/Os and auxiliary supply outputs without load)	[A]	0.5	
Current consumption (with holding brake)	[A]	1.5	
Current consumption (with holding brake, with CDSB, digital I/Os and auxiliary supply outputs with load and with fan, if present)	[A]	2.3	

Tab. 59: Logic supply

13.3.2 Power specifications, motor connection [X6A]

Internal protective functions detect short circuits between 2 motor phases and short circuits of a motor phase to PE. If a short circuit is detected, the pulse-width modulation signals are switched off.

Parameters for the power specifications			
CMMT-AS-		C2-3A	C4-3A
Nominal voltage of mains connection	[V AC]	230	
Ambient temperature (air)	[°C]	≤ 40	
Setup altitude	[m]	≤ 1000	

Tab. 60: Parameters

Power specifications during operation with the given parameters [X6A]					
CMMT-AS-		C2-3A		C4-3A	
Pulse-width modulation frequency	[kHz]	8	16	8	16
Current regulator cycle time	[µs]	62.5			
Nominal output power (S1 operation; cos(phi) > 0.8)	[W]	350	255	700	500
Nominal current (S1 operation)	[A_{RMS}]	2.0	1.5	4	2.5
Max. output power (S2 operation; cos(phi) > 0.8)	[W]	1000	700	2000	1400
Maximum current	[A_{RMS}]	6	4.5	12	7.5
Output voltage range	[V_{RMS}]	3 x 0 ... input			
Output voltage with feed of nominal voltage and nominal power	[V_{RMS}]	205			
Output frequency	[Hz]	0 ... 599			
Duration for maximum current (f_s > 5 Hz)	[s]	2			
Duration for maximum current at standstill ($f_s \leq 5$ Hz); minimum cycle time 1 s!	[s]	0.2			

Tab. 61: Power specifications, motor connection [X6A]

13.4 Technical data of UL/CSA certification

In combination with the UL inspection mark on the product, the information in this section must also be observed in order to comply with the certification conditions of Underwriters Laboratories Inc. (UL) for USA and Canada.

UL/CSA certification information	
Product category code	NMMS / NMMS7 (Power Conversion Equipment)
File number	E331130_Vol-1_Sec-3
Considered standards	UL61800-5-1 Adjustable Speed Electrical Power Drive Systems CSA C22.2 No. 274-17 – Adjustable Speed Drive
UL mark	c UL us LISTED
UL control number	4PU8

Tab. 62: UL/CSA certification information

- Use in an environment with pollution degree 2 (or better).
- Use only Cu cables that have a permissible constant insulation temperature of at least 75 °C at the following connections:
  - [X6A], motor connection
  - [X9A], power supply and DC link circuit connection
  - [X9B], connection for braking resistor
- UL: The integrated semiconductor short-circuit protection does not protect the downstream power circuit. The power circuit must be protected in conformity with the National Electrical Code and all other local regulations.
  CSA: The integrated semiconductor short-circuit protection does not protect the downstream power circuit. The power circuit must be protected in conformity with the Canadian Electrical Code, part I.

Requirements for circuit breakers (automatic circuit breakers) and fuses			
Overcurrent protective device		Circuit breaker	Class J/CC fuse
Max. approved rated current	[A]	15	25
Short circuit current rating SCCR of mains fuse	[kA]	min. 14	Min. 100
Rated voltage	[V AC]	277	600

Tab. 63: Requirements for circuit breakers and fuses

13.5 Additional technical data

Additional technical data on the product and detailed descriptions of all interfaces
➔ 1.2 Applicable documents, Manual Assembly, Installation.