Features

- 3 Pin Square Panel Connector
- IP67 (when mated)
- Screw Termination
- Male Contacts
- Push-Pull Coupling
- With IP44 TPE Plastic Cap
- Used in Factory Automation, Robotics, Industrial Machinery, Railway & Transportation, Aerospace & Defence, Medical Equipment, Renewable Energy Systems etc.

RS PRO Industrial Circular Connectors

RS Stock No.: 868138



RS PRO is the own brand of RS. The RS PRO Seal of Approval is your assurance of professional quality, a guarantee that every part is rigorously tested, inspected, and audited against demanding standards. Making RS PRO the Smart Choice for our customers.

Product Description

The RS Pro high-precision, waterproof connectors designed to meet IP67 sealing standards. Featuring a push-pull coupling mechanism, these connectors ensure fast, secure, and reliable mating. The chrome-plated brass housings provide excellent durability while maintaining a sleek, professional appearance.

Available in in-line cable-to-cable and cable-to-panel configurations, the series includes plugs and receptacles with either male pins or female sockets. Suitable for both data and power transmission, it is ideal for use in medical, communications, and test & measurement applications.

General Specifications

Number of Contacts	3
Shell Material	Brass with chrome plating
Insert Material	Polyphenylene Sulphide (PPS)
Contact Material	Brass Alloy
Contact Plating	Gold
Pole Format	3P
Contact Gender	Male
Mating Type	Push-Pull
Mating Cycles	500
Colour	Silver

Electrical Specifications

Plug/Socket	Socket
Termination	Screw
Current Rating (A)	10
Voltage Rating (V)	500
Insulation Resistance (MΩ)	2000
Contact Resistance (mΩ)	1

Mechanical Specifications

Male Contact Diameter (mm)	⌀2.5 x 3
Wire size (mm² / AWG)	⩽1.5/15

Operation Environment Specifications

Operating Temperature	-40°C to 85°C

Protection Category

IP Rating	IP67 (when mated)

Approvals

Compliance/Certifications	RoHS, CE

Mating Parts

Cable Mount Connector	868110
IP67 Metal Sealing Cap	868161

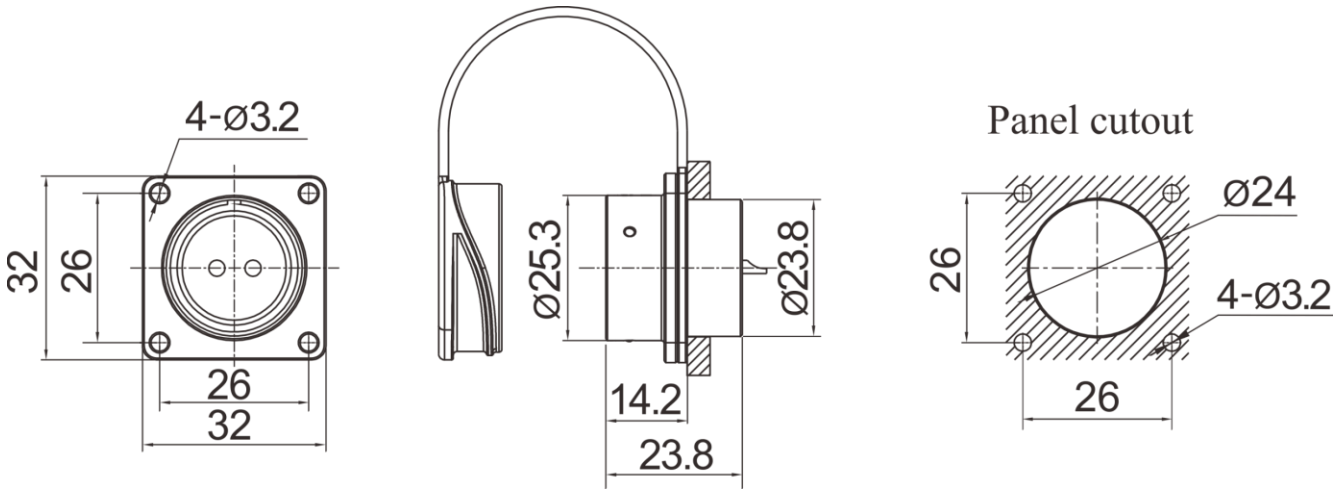

Male Contact View

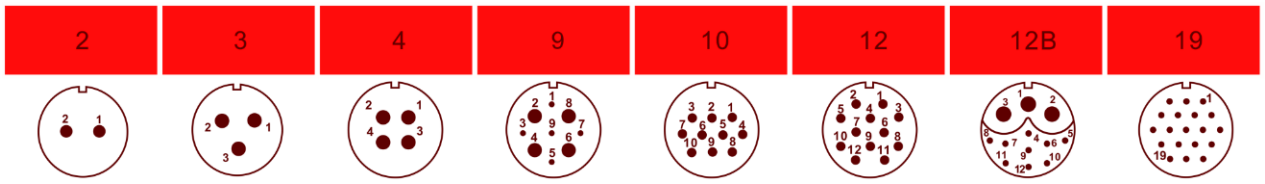

Similar Products

Parameters	868137	868138	868139	868140	868141
Number of Contacts	2	3	4	2	3
Current Rating	10	10	10	25	25
Voltage Rating	500	500	500	500	500
Contact Gender	Male	Male	Male	Male	Male
Termination Method	Screw	Screw	Screw	Solder	Solder
Wire size (mm²)	0.5 - 1.5	0.5 - 1.5	0.5 - 1.5	≤4	≤4
Contact Diameter	Ø2.5x2	Ø2.5x3	Ø2.5x4	Ø2.5x2	Ø2.5x3

Parameters	868142	868143	868144	868145	868146
Number of Contacts	4	9	10	12	12B
Current Rating	25	5/25	10	10	5/30
Voltage Rating	500	500	500	500	500
Contact Gender	Male	Male	Male	Male	Male
Termination Method	Solder	Solder	Solder	Solder	Solder
Wire size (mm²)	≤4	≤0.75 / ≤4	≤1.5	≤1.5	≤0.75 / ≤4
Contact Diameter	Ø2.5x4	Ø1x5 / Ø2.5x4	Ø1.5x10	Ø1.5x12	Ø1x9 / Ø3x3

Parameters	868147
Number of Contacts	19
Current Rating	5
Voltage Rating	400
Contact Gender	Male
Termination Method	Solder
Wire size (mm²)	≤0.75
Contact Diameter	Ø1x19