THIS DRAWING IS UNPUBLISHED. RELEASED FOR PUBLICATION ,19 .
© COPYRIGHT 19 BY AMP INCORPORATED. ALL RIGHTS RESERVED.

LOC	DIST
AL	2

REVISIONS

P	LTR	DESCRIPTION	DATE	DWN	APVD
	A	ES00-0040-01	10JUL2001	JC	JP
	A1	REVISED PER ECO-09-025714	16DEC09	KK	AEG

	PART NUMBER	SECTION mm2	L1	L2	D1	D2	COLOR	QTY/BAG
	737730-1	0.5	12.0	6.0	1.0	2.6	WHITE	200
	737730-2		14.0	8.0				
	737730-3		16.0	10.0				
	737731-1	0.75	12.0	6.0	1.2	2.8	GREY	200
	737731-2		14.0	8.0				
	737731-3		16.0	10.0				
	737731-4		18.0	12.0				
	737732-1	1.0	12.0	6.0	1.4	3.0	RED	200
	737732-2		14.0	8.0				
	737732-3		16.0	10.0				
	737732-4		18.0	12.0				
	737733-1	1.5	14.0	8.0	1.7	3.5	BLACK	200
	737733-2		16.0	10.0				
	737733-3		18.0	12.0				
OBSOLETE	737733-4		24.0	18.0				
	737734-1	2.5	14.0	8.0	2.2	4.2	BLUE	100
	737734-2		18.0	12.0				
OBSOLETE	737734-3		24.0	18.0				
	737735-1	4.0	17.0	10.0	2.8	4.8	GREY	100
	737735-2		20.0	12.0				
	737735-3		26.0	18.0				
	737736-1	6.0	20.0	12.0	3.5	6.3	YELLOW	100
	737736-2		26.0	18.0				
	737737-1	10.0	22.0	12.0	4.5	7.6	RED	50
	737737-2		28.0	18.0				
	737738-1	16.0	24.0	12.0	5.8	8.8	BLUE	50
	737738-2		28.0	18.0				
	737739-1	25.0	30.0	16.0	7.3	11.2	YELLOW	50
	737739-2		30.0	18.0				
	737739-3		36.0	22.0				
	737740-1	35.0	30.0	16.0	8.3	12.7	RED	25
	737740-2		30.0	18.0				
	737740-3		39.0	25.0				
	737741-1	50.0	36.0	20.0	10.3	15.0	BLUE	25
5 OBSOLETE	737741-2		40.0	25.0				

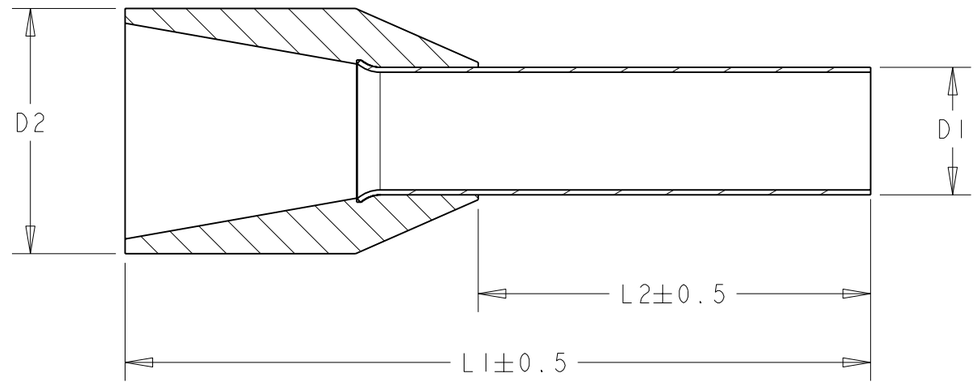

1. DIMENSIONS BASED ON DIN 46228.4
2. COLOR BASED ON DIN 47002
3. USE HAND TOOL 790081-1 FOR 0.5-4.0 mm2.

   USE HAND TOOL 790081-2 FOR 6.0-16.0 mm2

4. FINISH FOR METAL SLEEVE: TIN
5. OBSOLETE PARTS: OBSOLETE CIS STREAMLINING PER D.RENAUD/D.SINISI

1. DIMENSIONES BASADAS EN DIN 46228.4
2. COLOR BASADO EN DIN 47002
3. USAR HERRAMIENTA MANUAL 790081-1 PARA 0.5-4.0mm2.

   USAR HERRAMIENTA MANUAL 790081-2 PARA 6.0-16.0mm2.

4. ACABADO PARA EL CASQUILLO METALICO: ESTAÑADO.

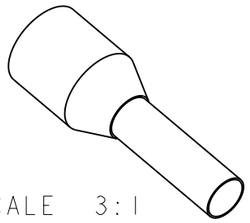

SCALE 3:1

THIS DRAWING IS A CONTROLLED DOCUMENT FOR AMP INCORPORATED. IT IS SUBJECT TO CHANGE AND THE CONTROLLING ENGINEERING ORGANIZATION SHOULD BE CONTACTED FOR THE LATEST REVISION.

DIMENSIONS: mm

TOLERANCES UNLESS OTHERWISE SPECIFIED:

0 PLC	±-
1 PLC	±0.3
2 PLC	±
3 PLC	±
4 PLC	±
ANGLES	±-

MATERIAL: Cu-E PA 6.6

FINISH: 4

DWN F.J.CARBONELL 10JUL2001
CHK J.PASCUAL 10JUL2001
APVD - -
PRODUCT SPEC 108-22049
APPLICATION SPEC -
WEIGHT -

CUSTOMER DRAWING

AMP — Tyco Electronics Corp, AMP España, S.A. Barcelona. Spain.

NAME: WIRE PIN PUNTERA

SIZE	CAGE CODE	DRAWING NO
A3	00779	C-737730

SCALE - SHEET 1 OF 1 REV A1

AMP 1470-19 REV 09MAY94

Pro/ENGINEER DRAWING