Product datasheet

Specifications



Discontinued

photo-electric sensor - XUM - BGS - Sn 0.3m - 12..24VDC - M12 - cable 0.3m

XUM8APCNL03M12

Discontinued on: 01 November 2020

XUM8APCNL03M12 has not been replaced. Please contact your customer care centre for more information.

Main

Range of product	Telemecanique Photoelectric sensors XU
Series name	General purpose single mode
Electronic sensor type	Photo-electric sensor
Sensor name	XUM
Sensor design	Miniature
Detection system	Diffuse with background suppression
Material	Plastic
Type of output signal	Discrete
Supply circuit type	DC
Wiring technique	3-wire
Discrete output type	PNP
Discrete output function	1 NO or 1 NC programmable
Electrical connection	Remote male connector M12, 4 pins
Cable length	0.3 m
Product specific application	-
Emission	Red diffuse with background suppression
[Sn] nominal sensing distance	0.3 m diffuse with background suppression

Complementary

Enclosure material	PBT
Lens material	PC
Maximum sensing distance	0.3 m diffuse with background suppression
Output type	Solid state
Wire insulation material	PVC
Status LED	1 LED (green) for instability 1 LED (orange) for output state
[Us] rated supply voltage	12...24 V DC with reverse polarity protection
Supply voltage limits	10…30 V DC

Disclaimer: This documentation is not intended as a substitute for and is not to be used for determining suitability or reliability of these products for specific user applications

Switching capacity in mA	<= 100 mA (overload and short-circuit protection)
Maximum voltage drop	<2 V (closed state)
Current consumption	<= 20 mA no-load
Maximum delay first up	100 ms
Maximum delay response	1 ms
Setting-up	Sensitivity adjustment by potentiometer
Depth	20 mm
Height	33 mm
Length	11 mm
Width	11 mm
Net weight	0.02 kg

Environment

Product certifications	CE cURus
Ambient air temperature for operation	-25…55 °C
Ambient air temperature for storage	-30…70 °C
Immunity to ambient light	3000 lux natural light 3000 lux incandescent light
Vibration resistance	20 gn, amplitude = +/- 1.5 mm (f = 10…500 Hz) conforming to IEC 60068-2-6
Shock resistance	50 gn (duration = 11 ms) conforming to IEC 60068-2-27
IP degree of protection	IP67 conforming to IEC 60529

Packing Units

Unit Type of Package 1	PCE
Number of Units in Package 1	1
Package 1 Weight	30.0 g
Package 1 Height	2 cm
Package 1 width	16 cm
Package 1 Length	20 cm
Unit Type of Package 2	S02
Number of Units in Package 2	48
Package 2 Weight	1.812 kg
Package 2 Height	15 cm
Package 2 width	30 cm
Package 2 Length	40 cm

Offer Sustainability

EU RoHS Directive	Pro-active compliance (Product out of EU RoHS legal scope) EU RoHS Declaration
Mercury free	Yes
RoHS exemption information	Yes

Contractual warranty

Warranty	18 months

Product datasheet XUM8APCNL03M12

Dimensions Drawings

Dimensions

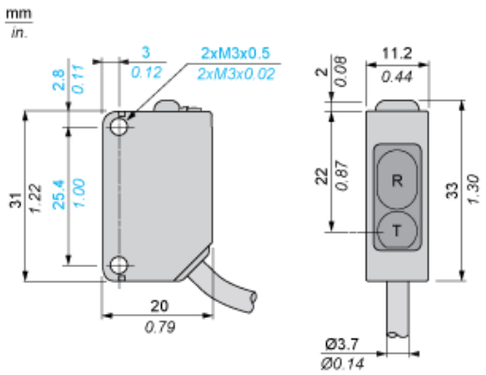

R : Reception
T : Transmission

Mounting

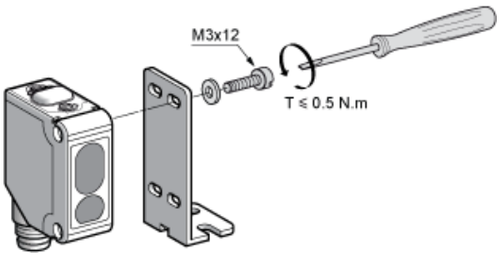

Wiring Schemes

M12 Connector

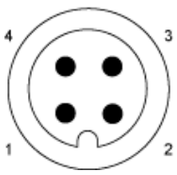

1 : (+)
2 : Mode/Input
3 : (-)
4 : Output

PNP Output

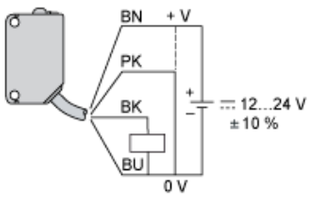

BU : Blue
BN : Brown
BK : Black
PK : Pink
Note : This scheme is represented in "background suppression" mode, cabling of pink (PK) wire to 0 V

Detection Curves

Variation of Usable Sensing Distance

Minimum Setting

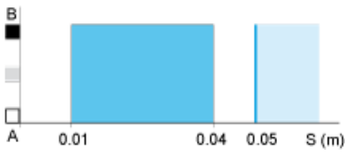

Maximum Setting

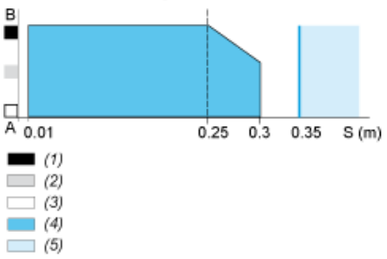

A-B : Object reflection coefficient
(1) Black 6%
(2) Grey 18%
(3) White 90%
(4) Sensing range
(5) Non sensing zone (matt surfaces)