FAIRCHILD SEMICONDUCTOR®

December 2013

FSA4159
Low-Voltage, 1Ω SPDT Analog Switch with Power-Off Isolation

Features

- Low I_{CC} When the S Input is Lower Than V_{CC}
- Power-Off Isolation (V_{CC}=0 V)
- 1 Ω On Resistance (R_{ON}) for 4.5 V V_{CC}
- 0.25 Ω Maximum R_{ON} Flatness for 4.5 V V_{CC}
- Space-Saving, Pb-Free, 6-Lead SC70 Surface Mount Package
- Broad V_{CC} Operating Range: 1.65 V to 5.50 V
- Fast Turn-On and Turn-Of Times
- Break-Before-Make Enable Circuitry
- Pb-Free "Green" Packaging

Applications

- Cellular Phone
- Portable Media Player
- PDA

Description

The FSA4159 is a high-performance Single-Pole / Double-Throw (SPDT) analog switch. The device features ultra-low R_{ON} of 1 Ω at 4. 5V V_{CC} and operates over the wide V_{CC} range of 1.65 V to 5.50 V. The device is fabricated with sub-micron CMOS technology to achieve fast switching speeds and is designed for break-before-make operation.

The FSA4159 features very low quiescent current even when the control voltage is lower than the V_{CC} supply. This feature services mobile handset applications by allowing direct interface with baseband processor general-purpose I/Os.

Ordering Information

Part Number	Operating Temperature Range	Package	Packing Method
FSA4159P6X	-40°C to +85°C	6-Lead SC70, EIAJ SC88, 1.25 mm Wide	3000 Units on Tape and Reel
FSA4159L6X	-40°C to +85°C	6-Lead MicroPak™, 1.00 mm Wide	5000 Units on Tape and Reel

MicroPak™ is a trademark of Fairchild Semiconductor Corporation.

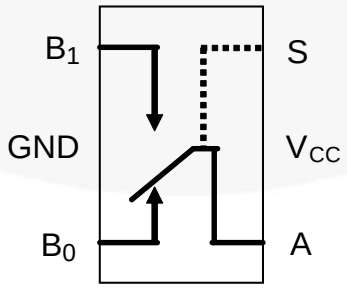

Figure 1. Analog Symbols

© 2007 Fairchild Semiconductor Corporation

Pin Configuration

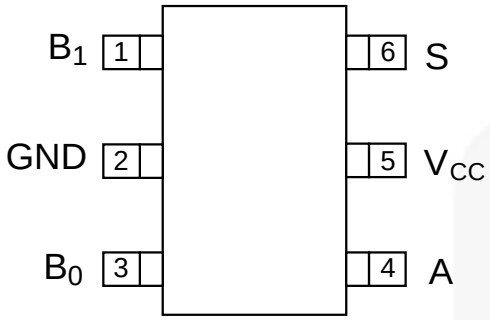

Figure 2. SC70 Pin Assignments (Top View)

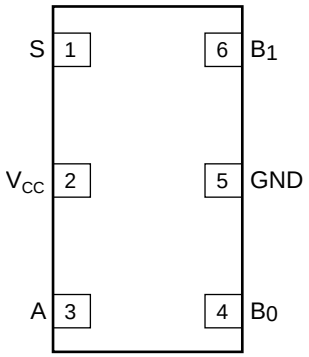

Figure 3. MicroPak™ Pin Assignment (Top View)

Pin Definitions

Pin# SC70	Pin# MicroPak™	Name	Description
1	6	B1	Data Ports
2	5	GND	Ground
3	4	B0	Data Ports
4	3	A	Data Ports
5	2	V_{CC}	Supply Voltage
6	1	S	Control Input

Truth Table

Control Input (S)	Function
LOW	B0 connected to A
HIGH	B1 connected to A

Absolute Maximum Ratings

Stresses exceeding the absolute maximum ratings may damage the device. The device may not function or be operable above the recommended operating conditions and stressing the parts to these levels is not recommended. In addition, extended exposure to stresses above the recommended operating conditions may affect device reliability. The absolute maximum ratings are stress ratings only.

Symbol	Parameter	Min.	Max.	Unit
V_{CC}	Supply Voltage	-0.5	6.5	V
V_{SW}	Switch Voltage[1]	-0.5	V_{CC} + 0.5	V
V_{IN}	Input Voltage[1]	-0.5	6.5	V
I_{IK}	Input Diode Current		-50	mA
I_{SW}	Switch Current (Continuous)		200	mA
I_{SWPEAK}	Peak Switch Current (Pulsed at 1ms Duration, <10% Duty Cycle)		400	mA
P_D	Power Dissipation at 85°C		180	mW
T_{STG}	Storage Temperature Range	-65	+150	°C
T_J	Max Junction Temperature		+150	°C
T_L	Lead Temperature (Soldering, 10 Seconds)		+260	°C
ESD	Human Body Model (JEDEC: JESD22-A114)		4000	V
	Charged Device Model (JEDEC: JESD22-C101)		1500	
	Machine Model (JEDEC: JESD22-A115)		200	

Note:
1. The input and output negative ratings may be exceeded if the input and output diode current ratings are observed.

Recommended Operating Conditions

The Recommended Operating Conditions table defines the conditions for actual device operation. Recommended operating conditions are specified to ensure optimal performance to the datasheet specifications. Fairchild does not recommend exceeding them or designing to Absolute Maximum Ratings.

Symbol	Parameter	Min.	Max.	Unit
V_{CC}	Supply Voltage	1.65	5.50	V
S	Control Input Voltage[2]	0	V_{CC}	V
V_{SW}	Switch Input Voltage	0	V_{CC}	V
T_A	Operating Temperature	-40	+85	°C
θ_{JA}	Thermal Resistance, Still Air		350	°C/W

Note:
2. Control Input must be held HIGH or LOW; it must not float.

Electrical Characteristics

All typical values are at 25°C unless otherwise specified.

Symbol	Parameter	V_{CC} (V)	Conditions	T_A=+25°C			T_A=-40 to +85°C		Unit
				Min.	Typ.	Max.	Min.	Max.	
V_{IH}	Input Voltage High	4.50 to 5.50					2.4		V
		3.00 to 3.60					2.4		
		2.30 to 2.70					1.8		
		1.65 to 1.95					1.5		
V_{IL}	Input Voltage Low	4.50 to 5.50						0.8	V
		3.00 to 3.60						0.8	
		2.30 to 2.70						0.6	
		1.65 to 1.95						0.6	
I_{IN}	Control Input Leakage	5.50	V_{IN}=0 or V_{CC}	-2		2	-100	100	nA
		3.60	V_{IN}=0 or V_{CC}	-2		2	-100	100	
		2.70	V_{IN}=0 or V_{CC}	-2		2	-20	20	
		1.95	V_{IN}=0 or V_{CC}	-2		2	-20	20	
$I_{NO(0FF)}$, $I_{NC(OFF)}$	Off-Leakage Current of Port B_0 and B_1	5.50	A=1 V, 4.5 V, B_0 or B_1=4.5 C, 1.0 V	-10		10	-50	50	nA
		3.60	A=1 V, 3.0 V, B_0 or B_1=3.0 V, 1.0 V	-10		10	-50	50	
		2.70	A=0.5 V, 2.3 V, B_0 or B_1=2.3 V, 0.5 V	-10		10	-50	50	
		1.95	A=0.3 V, 1.65 V, B_0 or B_1=1.65 V, 0.3 V	-5		5	-20	20	
$I_{NO(On)}$, $I_{NC(On)}$	On-Leakage Current of Port B_0 and B_1	5.50	A=Float, B_0 or B_1=4.5 V, 1.0 V	-20		20	-100	100	nA
		3.60	A=Float, B_0 or B_1=3.0 V, 1.0 V	-10		10	-20	20	
		2.70	A=Float B_0 or B_1=2.3 V, 0.5 V	-10		10	-20	20	
		1.95	A=Float, B_0 or B_1=1.65 V, 0.3 V	-5		5	-20	20	
$I_{A(ON)}$	On Leakage Current of Port A	5.50	A=1 V,4.5 V B_0 or B_1=1 V, 4.5 V, or Floating	-20		20	-100	100	nA
		3.60	A=1 V, 3 V, B_0 or B_1=1 V, 3 V, or Floating	-10		10	-20	20	
		2.70	A=0.5 V, 2.3 V B_0 or B_1=0.5 V, 2.3 V, or Floating	-10		10	-20	20	
		1.95	A=0.3 V, 1.65 V B_0 or B_1=0.3 V, 1.65 V, or Floating	-5		5	-20	20	
I_{OFF}	Power Off Leakage Current of Port A & Port B	0	A=0 to 5.5 V B_0 or B_1=0 to5.5 V		±1.00		-5.00	5.00	µA

Continued on following page…

Electrical Characteristics (Continued)

All typical values are at 25°C unless otherwise specified.

Symbol	Parameter	V_{CC} (V)	Conditions		T_A=+25°C			T_A=-40 to +85°C		Unit
					Min.	Typ.	Max.	Min.	Max.	
R_{PEAK}	Peak On Resistance	4.50	I_{OUT}=-100 mA, B_0 or B_1=0 to V_{CC}			1.0	1.1		1.3	Ω
		3.00	I_{OUT}=-100 mA, B_0 or B_1=0 to V_{CC}			1.2	1.5		1.8	
		2.30	I_{OUT}=-8 mA, B_0 or B_1=0 to V_{CC}			1.5	2.0		2.5	
		1.65	I_{OUT}=2 mA, B_0 or B_1=0 to V_{CC}	T_A=25, 85°C		4.0	10.0		15.0	
				T_A=-40°C		10.0				
R_{ON}	Switch On Resistance(3)	4.50	I_{OUT}=-100 mA, B_0 or B_1=2.5 V			0.8	0.9		1.1	Ω
		3.00	I_{OUT}=-100 mA, B_0 or B_1=2.0 V			1.0	1.3		1.6	
		2.30	I_{OUT}=-8 mA, B_0 or B_1=1.8 V			1.4	2.0		2.4	
		1.65	I_{OUT}=-2 mA, B_0 or B_1=1.5 V			1.7	2.5		3.5	
ΔR_{ON}	On Resistance Matching Between Channels(4)	4.50	I_{OUT}=-100 mA, B_0 or B_1=2.5 V			0.05	0.10		0.10	Ω
		3.00	I_{OUT}=-100 mA, B_0 or B_1=2.0 V			0.10	0.15		0.15	
		2.30	I_{OUT}=-8 mA, B_0 or B_1=1.8 V			0.15	0.20		0.20	
		1.65	I_{OUT}=-2 mA B_0 or B_1=1.5 V			0.15	0.40		0.40	
$R_{FLAT(ON)}$	On Resistance Flatness(5)	4.50	I_{OUT}=-100 mA, B_0 or B_1=1.0 V, 1.5 V, 2.5 V			0.075	0.250		0.250	Ω
		3.00	I_{OUT}=-100 mA, B_0 or B_1=0.8 V, 2.0 V			0.1	0.3		0.3	
		2.30	I_{OUT}=-8 mA, B_0 or B_1=0.8 V, 1.8 V			0.2	1.0		1.0	
		1.65	I_{OUT}=-2 mA, B_0 or B_1=0.6 V, 1.5 V			3.5				
I_{CC}	Quiescent Supply Current	5.50	V_{IN}=0 or V_{CC}, I_{OUT}=0			10.0	50.0		500.0	nA
		3.60	V_{IN}=0 or V_{CC}, I_{OUT}=0			1.0	25.0		100.0	
		2.70	V_{IN}=0 or V_{CC}, I_{OUT}=0			0.5	20.0		50.0	
		1.95	V_{IN}=0 or V_{CC}, I_{OUT}=0			0.5	15.0		50.0	

Notes:

3. On resistance is determined by the voltage drop between A and B pins at the indicated current through the switch.
4. ΔR_{ON}=R_{ON} maximum – R_{ON} minimum measured at identical V_{CC}, temperature and voltage.
5. Flatness is defined as the difference between the maximum and minimum value of on resistance over the specified range of conditions.

AC Electrical Characteristics

All typical value are at V_{CC}=1.8 V, 2.5 V, 3.0 V, 5.0 V at 25°C unless otherwise specified.

Symbol	Parameter	V_{CC} (V)	Conditions	T_A=+25ºC			T_A=-40to+85ºC		Unit	Figure
				Min.	Typ.	Max.	Min.	Max.		
t_{ON}	Turn-On Time	4.50 to 5.50	B_0 or B_1=V_{CC}, R_L=50 Ω, C_L=35 pF	1	16	30	1	35	ns	Figure 11
		3.00 to 3.60		5	21	35	3	50		
		2.30 to 2.70		5	28	40	5	50		
		1.65 to 1.95		10	50	70	10	75		
t_{OFF}	Turn-Off Time	4.50 to 5.50	B_0 or B_1=V_{CC}, R_L=50 Ω, C_L=35 pF	1	13	20	1	30	ns	Figure 11
		3.00 to 3.60		1	15	20	1	30		
		2.30 to 2.70		2	20	35	2	50		
		1.65 to 1.95		2.0	28	40	2	50		
t_{BBM}	Break-Before-Make Time	4.50 to 5.50	B_0 or B_1=V_{CC}, R_L=50 Ω, C_L=35 pF		3.0		0.1	20.0	ns	Figure 12
		3.00 to 3.60			6.0		1.0	40.0		
		2.30 to 2.70		2.0	10.0	35.0	2.0	45.0		
		1.65 to 1.95			22.0		2.0	70.0		
Q	Charge Injection	5.50	C_L=1.0 nF, V_{GEN}=0 V, R_{GEN}=0 Ω		15				pC	Figure 14
		3.30			11					
		2.50			8					
		1.65			6					
OIRR	Off Isolation	1.80 to 5.00	f=1 MHz, R_L=50 Ω		-60				dB	Figure 13
Xtalk	Crosstalk	1.80 to 5.00	f=1 MHz, R_L=50 Ω		-60				dB	Figure 13
BW	-3db Bandwidth	5.50	R_L=50 Ω		180				MHz	Figure 7 Figure 8 Figure 16
		3.30			180					
		2.50			180					
		1.65			180					
THD	Total Harmonic Distortion	1.80	R_L=600 Ω, V_{IN}=0.5 V_{PP}, f=20 Hz to 20 kHz		.006				%	Figure 10 Figure 17
		5.00			.002					

Capacitance

Symbol	Parameter	V_{CC} (V)	Conditions	$T_{A=}$+25ºC			Unit
				Min.	Typ.	Max.	
C_{IN}	Control Pin Input Capacitance	0	f=1 MHz, See Figure 10		1.5		pF
C_{OFF}	B Port Off Capacitance	1.65 to 5.50	f=1 MHz, See Figure 10		12		pF
C_{ON}	A Port On Capacitance	1.65 to 5.50	f=1 MHz, See Figure 10		41		pF

Typical Performance Characteristics

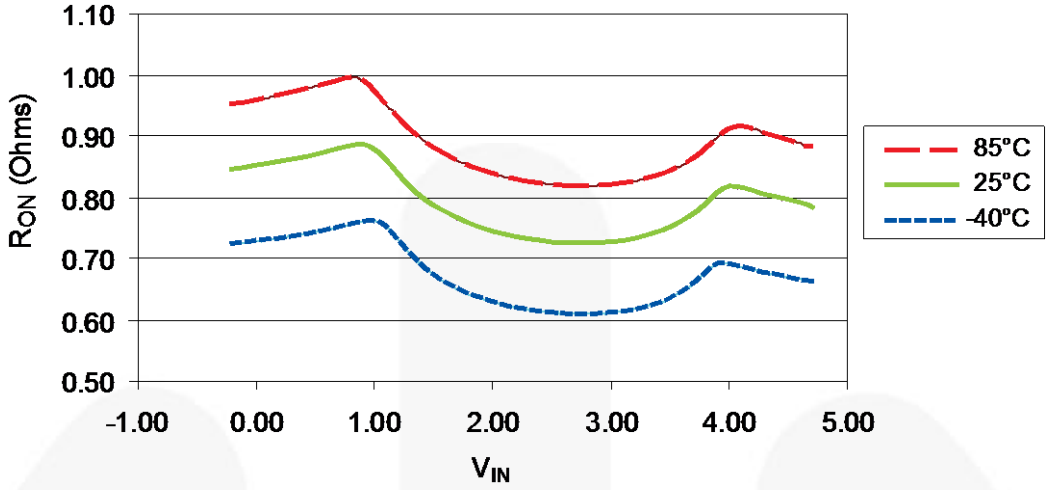

Figure 4. Switch R_{ON} (V_{CC}=4.5 V)

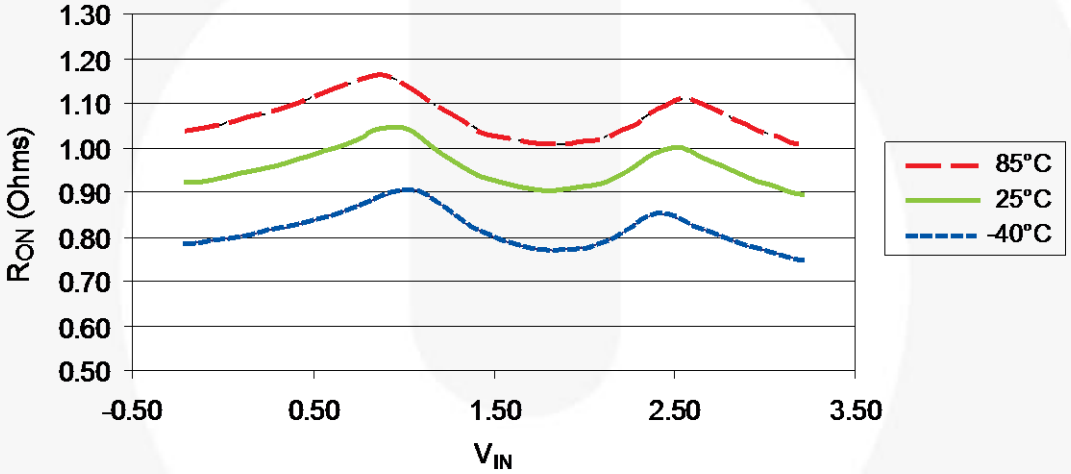

Figure 5. Switch R_{ON} (V_{CC}=3.0 V)

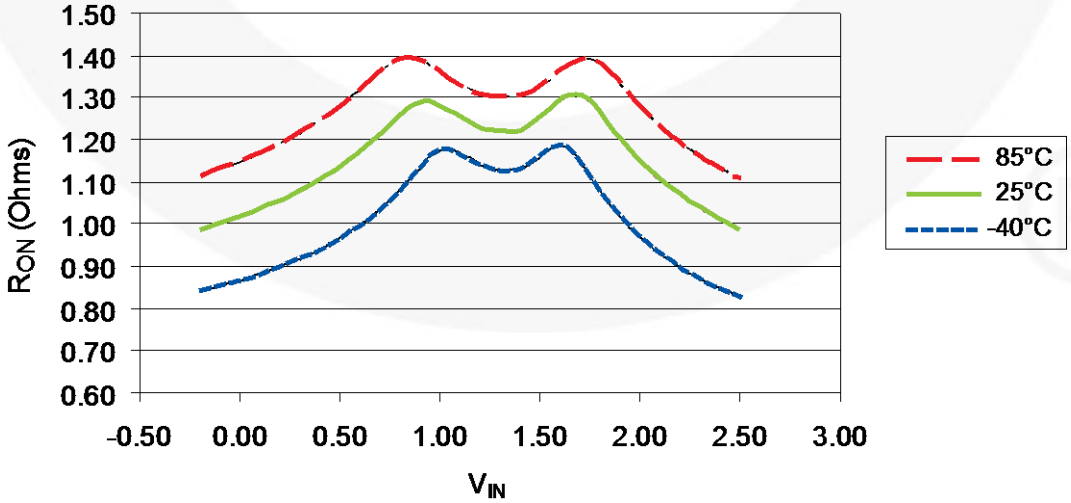

Figure 6. Switch R_{ON} (V_{CC}=2.3 V)

Typical Performance Characteristics (Continued)

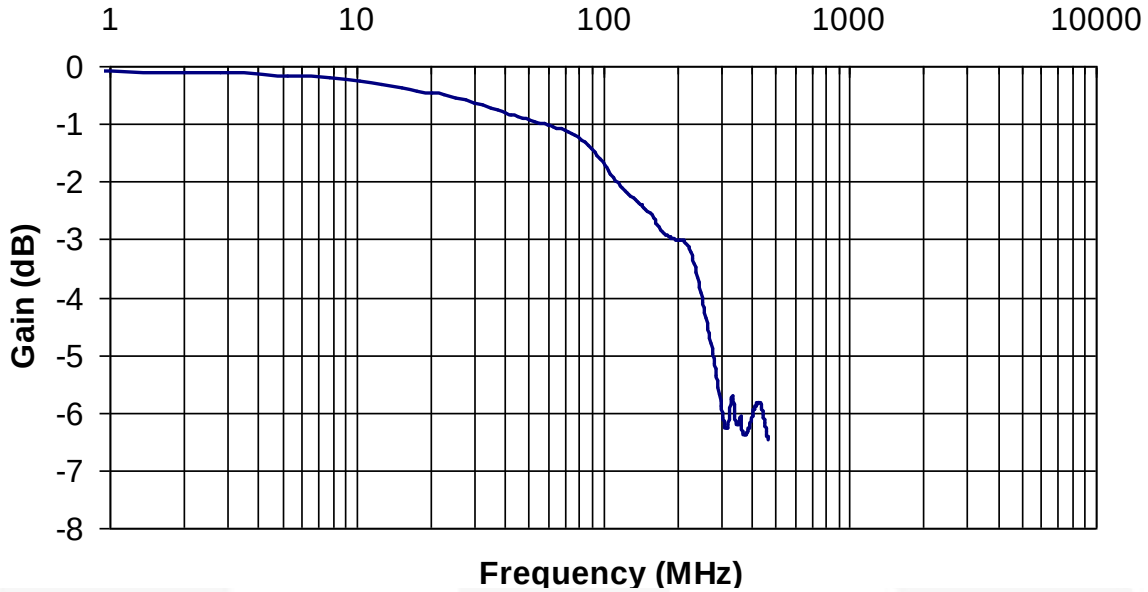

Figure 7. Frequency Response (C_L=0 pF, V_{CC}=5.5 V)

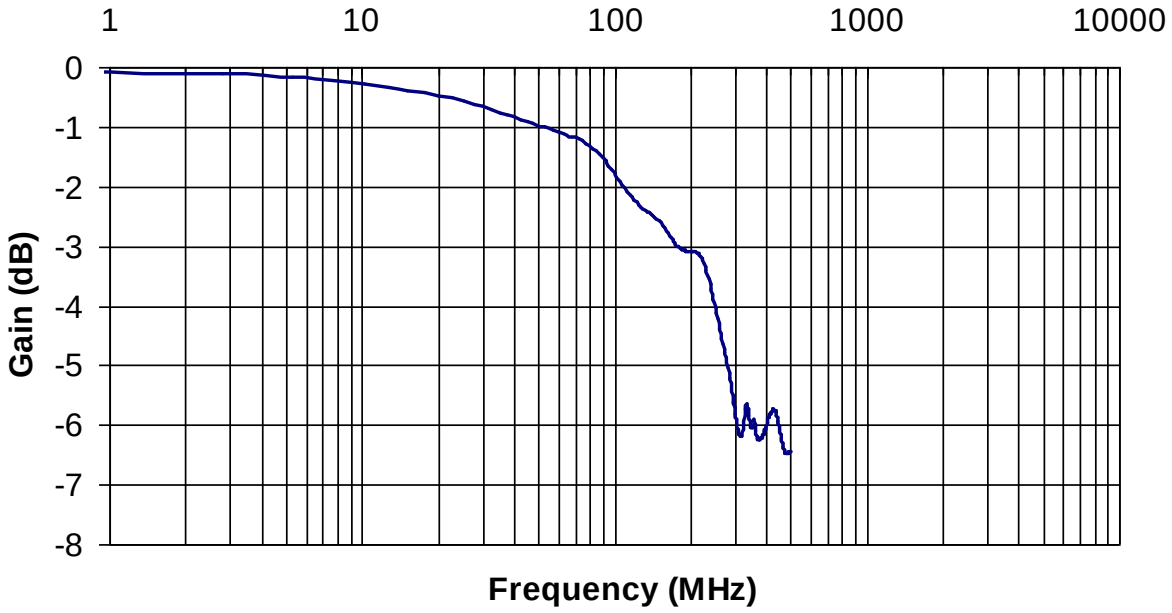

Figure 8. Frequency Response (C_L=0 pF, V_{CC}=3.3 V)

Typical Performance Characteristics (Continued)

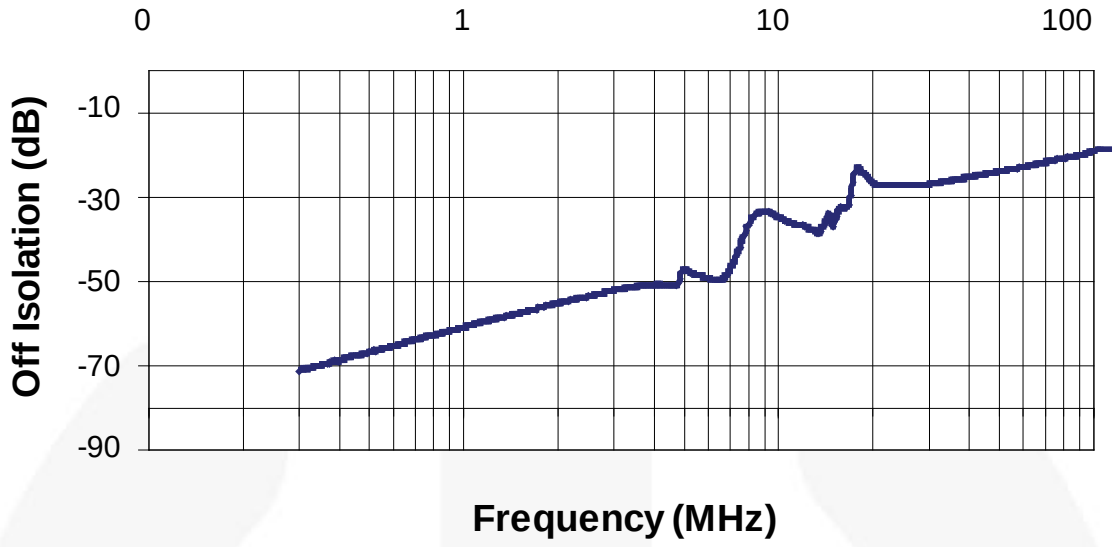

Figure 9. Off Isolation (V_{CC}=5.0 V)

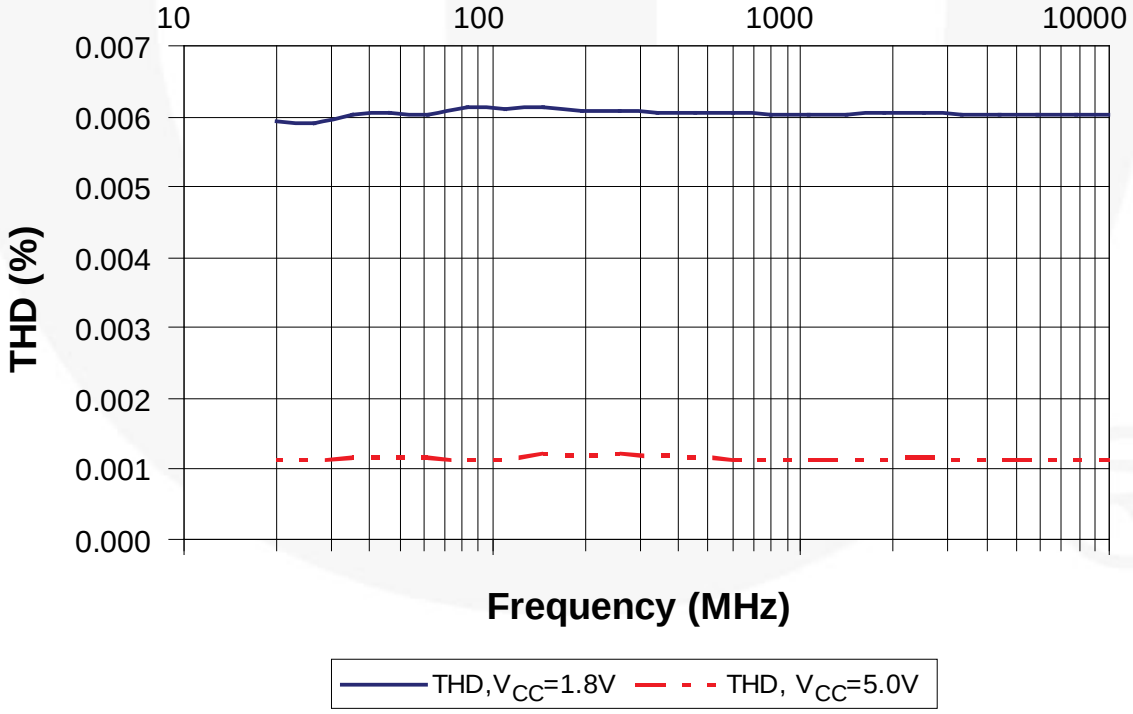

Figure 10. Total Harmonic Distortion, Frequency Response (C_L=0 pF)

Test Diagrams

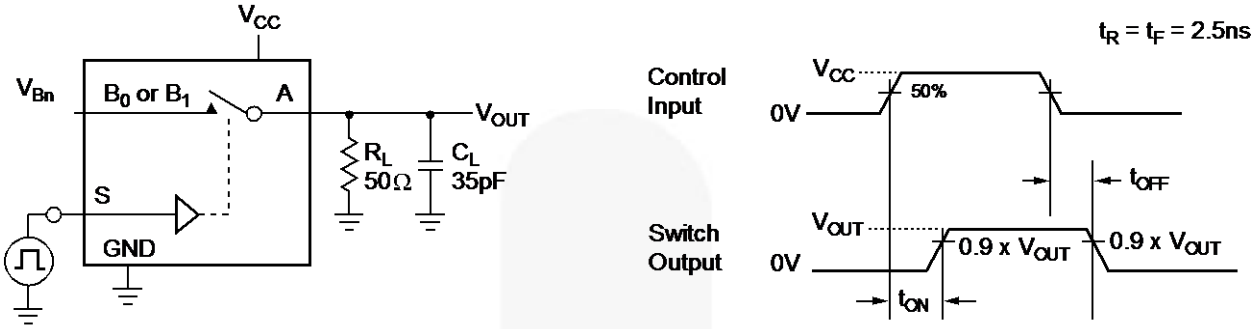

C_L includes fixture and stray capacitance.

Logic input waveforms inverted for switches that have the opposite logic sense.

Figure 11. Turn On / Off Timing

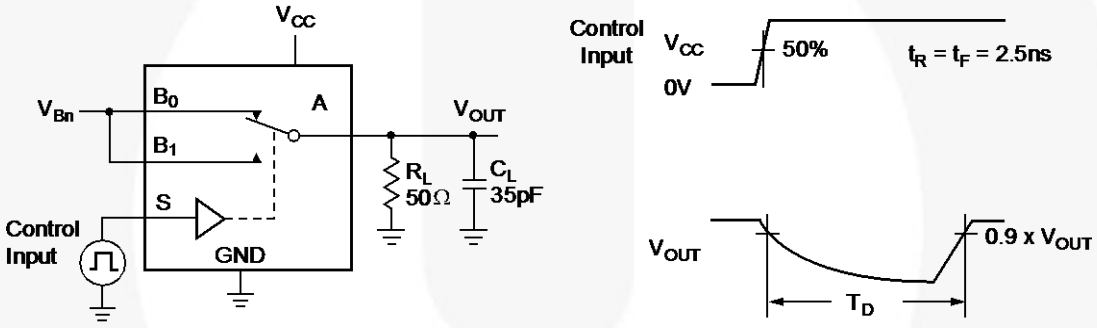

C_L includes fixture and stray capacitance.

Figure 12. Break-Before-Make Timing

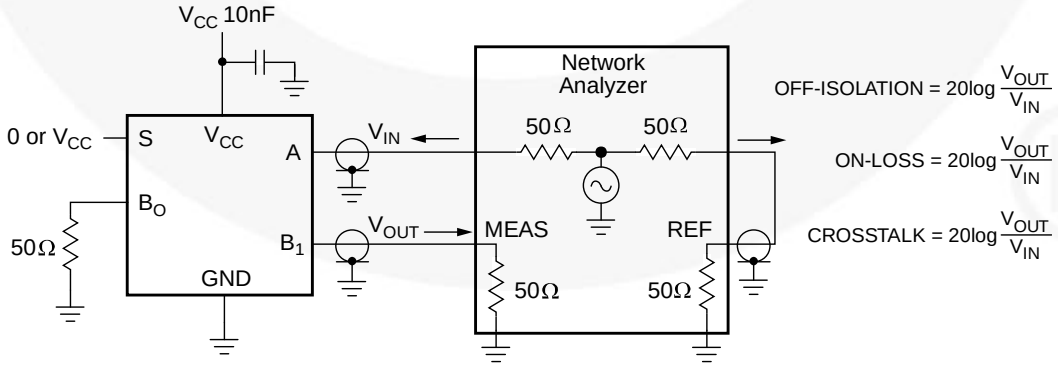

Figure 13. Off Isolation and Crosstalk

Test Diagrams (Continued)

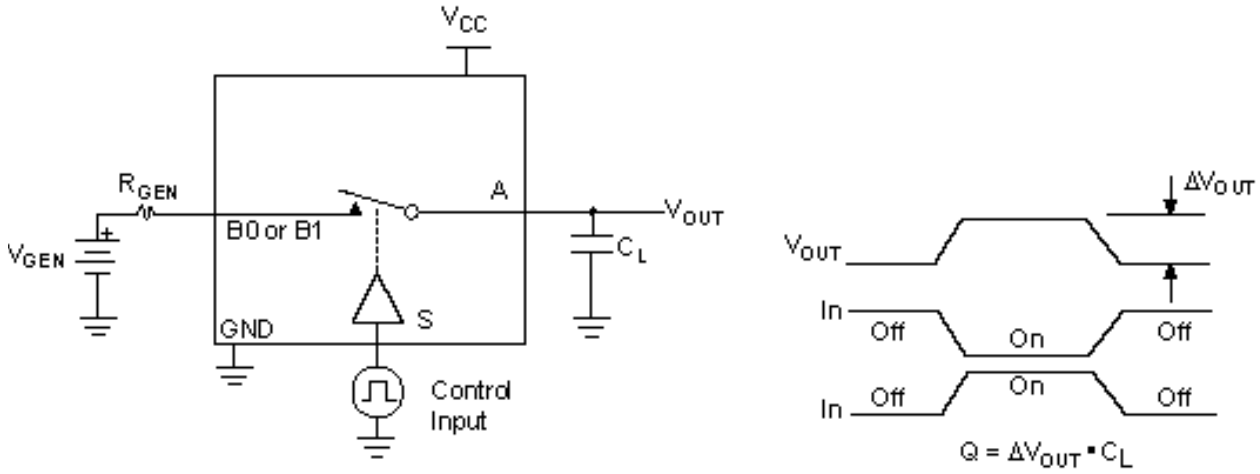

Figure 14. Charge Injection

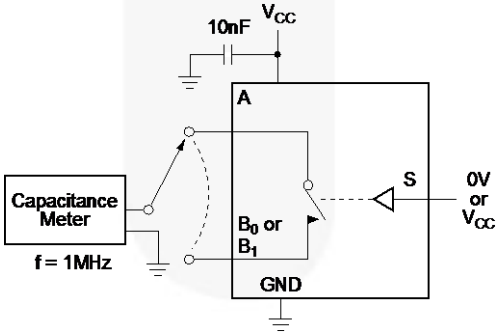

Figure 15. On / Off Capacitance Measurement Setup

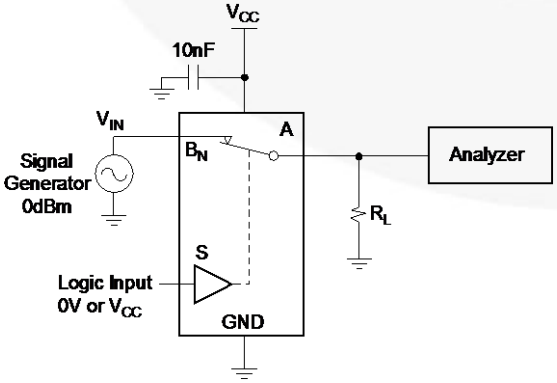

Figure 16. Bandwidth

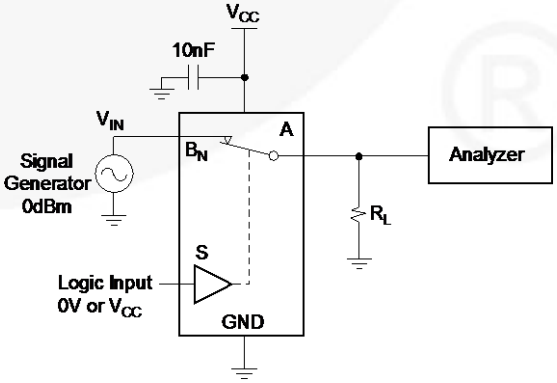

Figure 17. Harmonic Distortion

Physical Dimensions

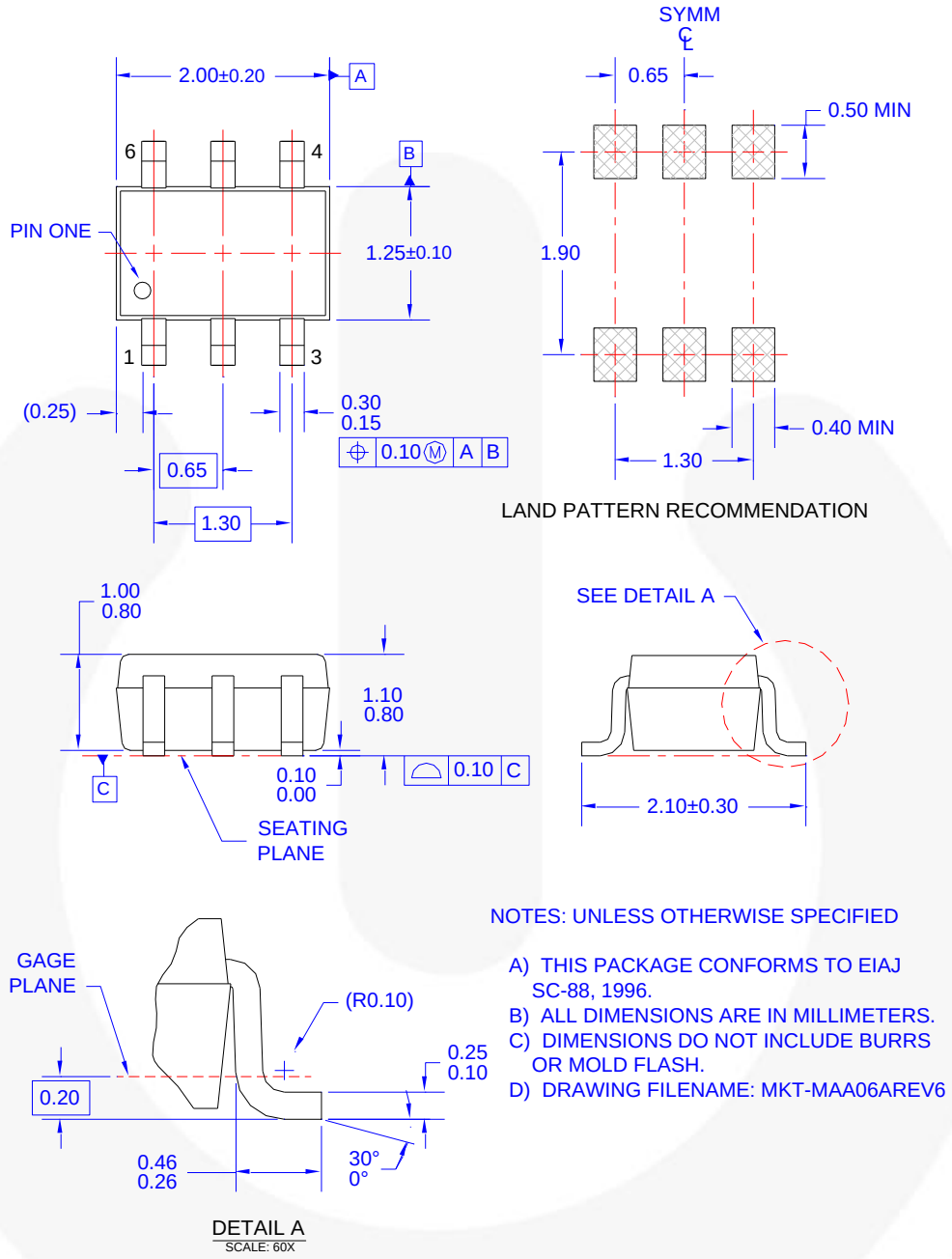

Figure 18. 6-Lead SC70, EIAJ SC88, 1.25mm Wide Package:

Package drawings are provided as a service to customers considering Fairchild components. Drawings may change in any manner without notice. Please note the revision and/or date on the drawing and contact a Fairchild Semiconductor representative to verify or obtain the most recent revision. Package specifications do not expand the terms of Fairchild's worldwide terms and conditions, specifically the warranty therein, which covers Fairchild products.

Always visit Fairchild Semiconductor's online packaging area for the most recent package drawings: http://www.fairchildsemi.com/dwg/MA/MAA06A.pdf.

For current tape and reel specifications, visit Fairchild Semiconductor's online packaging area: http://www.fairchildsemi.com/packing_dwg/PKG-MAA06A.pdf.

Physical Dimensions (Continued)

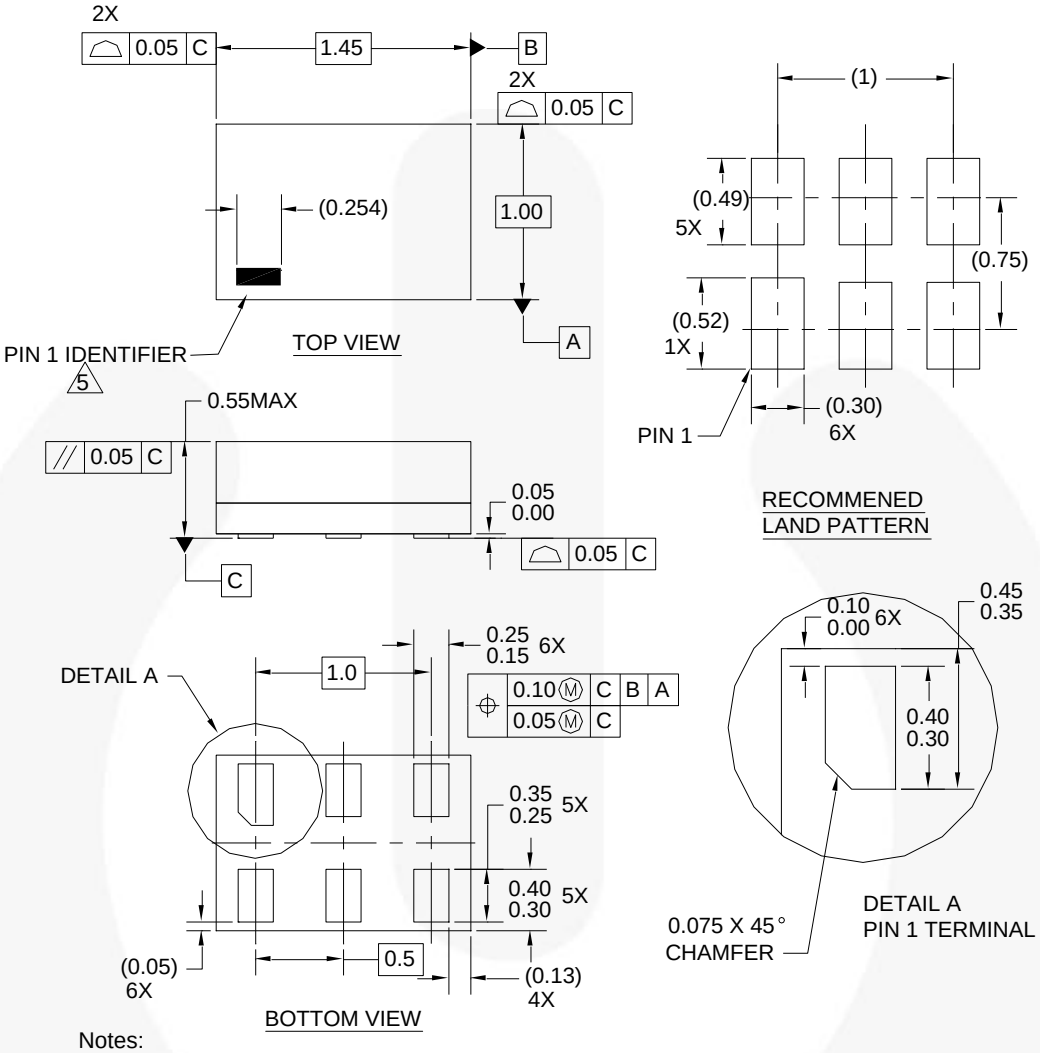

Notes:

1. CONFORMS TO JEDEC STANDARD M0-252 VARIATION UAAD
2. DIMENSIONS ARE IN MILLIMETERS
3. DRAWING CONFORMS TO ASME Y14.5M-1994
4. FILENAME AND REVISION: MAC06AREV4
5. PIN ONE IDENTIFIER IS 2X LENGTH OF ANY OTHER LINE IN THE MARK CODE LAYOUT.

Figure 19. 6-Lead, MicroPak™ 1.0mm Wide Package

Package drawings are provided as a service to customers considering Fairchild components. Drawings may change in any manner without notice. Please note the revision and/or date on the drawing and contact a Fairchild Semiconductor representative to verify or obtain the most recent revision. Package specifications do not expand the terms of Fairchild's worldwide terms and conditions, specifically the warranty therein, which covers Fairchild products.

Always visit Fairchild Semiconductor's online packaging area for the most recent package drawings:
http://www.fairchildsemi.com/dwg/MA/MAC06A.pdf.

For current tape and reel specifications, visit Fairchild Semiconductor's online packaging area:
http://www.fairchildsemi.com/packing_dwg/PKG-MAC06A.pdf.

FAIRCHILD SEMICONDUCTOR®

TRADEMARKS

The following includes registered and unregistered trademarks and service marks, owned by Fairchild Semiconductor and/or its global subsidiaries, and is not intended to be an exhaustive list of all such trademarks.

AccuPower™
AX-CAP®*
BitSiC™
Build it Now™
CorePLUS™
CorePOWER™
CROSSVOLT™
CTL™
Current Transfer Logic™
DEUXPEED®
Dual Cool™
EcoSPARK®
EfficientMax™
ESBC™
F®
Fairchild®
Fairchild Semiconductor®
FACT Quiet Series™
FACT®
FAST®
FastvCore™
FETBench™
FPS™
F-PFS™
FRFET®
Global Power Resource℠
GreenBridge™
Green FPS™
Green FPS™ e-Series™
Gmax™
GTO™
IntelliMAX™
ISOPLANAR™
Making Small Speakers Sound Louder and Better™
MegaBuck™
MICROCOUPLER™
MicroFET™
MicroPak™
MicroPak2™
MillerDrive™
MotionMax™
mWSaver®
OptoHiT™
OPTOLOGIC®
OPTOPLANAR®
PowerTrench®
PowerXS™
Programmable Active Droop™
QFET®
QS™
Quiet Series™
RapidConfigure™
™
Saving our world, 1mW/W/kW at a time™
SignalWise™
SmartMax™
SMART START™
Solutions for Your Success™
SPM®
STEALTH™
SuperFET®
SuperSOT™-3
SuperSOT™-6
SuperSOT™-8
SupreMOS®
SyncFET™
Sync-Lock™
SYSTEM GENERAL®*
TinyBoost®
TinyBuck®
TinyCalc™
TinyLogic®
TINYOPTO™
TinyPower™
TinyPWM™
TinyWire™
TranSiC™
TriFault Detect™
TRUECURRENT®*
µSerDes™
µSerDes™
UHC®
Ultra FRFET™
UniFET™
VCX™
VisualMax™
VoltagePlus™
XS™

* Trademarks of System General Corporation, used under license by Fairchild Semiconductor.

DISCLAIMER

FAIRCHILD SEMICONDUCTOR RESERVES THE RIGHT TO MAKE CHANGES WITHOUT FURTHER NOTICE TO ANY PRODUCTS HEREIN TO IMPROVE RELIABILITY, FUNCTION, OR DESIGN. FAIRCHILD DOES NOT ASSUME ANY LIABILITY ARISING OUT OF THE APPLICATION OR USE OF ANY PRODUCT OR CIRCUIT DESCRIBED HEREIN; NEITHER DOES IT CONVEY ANY LICENSE UNDER ITS PATENT RIGHTS, NOR THE RIGHTS OF OTHERS. THESE SPECIFICATIONS DO NOT EXPAND THE TERMS OF FAIRCHILD'S WORLDWIDE TERMS AND CONDITIONS, SPECIFICALLY THE WARRANTY THEREIN, WHICH COVERS THESE PRODUCTS.

LIFE SUPPORT POLICY

FAIRCHILD'S PRODUCTS ARE NOT AUTHORIZED FOR USE AS CRITICAL COMPONENTS IN LIFE SUPPORT DEVICES OR SYSTEMS WITHOUT THE EXPRESS WRITTEN APPROVAL OF FAIRCHILD SEMICONDUCTOR CORPORATION.

As used herein:

1. Life support devices or systems are devices or systems which, (a) are intended for surgical implant into the body or (b) support or sustain life, and (c) whose failure to perform when properly used in accordance with instructions for use provided in the labeling, can be reasonably expected to result in a significant injury of the user.
2. A critical component in any component of a life support, device, or system whose failure to perform can be reasonably expected to cause the failure of the life support device or system, or to affect its safety or effectiveness.

ANTI-COUNTERFEITING POLICY

Fairchild Semiconductor Corporation's Anti-Counterfeiting Policy. Fairchild's Anti-Counterfeiting Policy is also stated on our external website, www.fairchildsemi.com, under Sales Support.

Counterfeiting of semiconductor parts is a growing problem in the industry. All manufacturers of semiconductor products are experiencing counterfeiting of their parts. Customers who inadvertently purchase counterfeit parts experience many problems such as loss of brand reputation, substandard performance, failed applications, and increased cost of production and manufacturing delays. Fairchild is taking strong measures to protect ourselves and our customers from the proliferation of counterfeit parts. Fairchild strongly encourages customers to purchase Fairchild parts either directly from Fairchild or from Authorized Fairchild Distributors who are listed by country on our web page cited above. Products customers buy either from Fairchild directly or from Authorized Fairchild Distributors are genuine parts, have full traceability, meet Fairchild's quality standards for handling and storage and provide access to Fairchild's full range of up-to-date technical and product information. Fairchild and our Authorized Distributors will stand behind all warranties and will appropriately address any warranty issues that may arise. Fairchild will not provide any warranty coverage or other assistance for parts bought from Unauthorized Sources. Fairchild is committed to combat this global problem and encourage our customers to do their part in stopping this practice by buying direct or from authorized distributors.

PRODUCT STATUS DEFINITIONS

Definition of Terms

Datasheet Identification	Product Status	Definition
Advance Information	Formative / In Design	Datasheet contains the design specifications for product development. Specifications may change in any manner without notice.
Preliminary	First Production	Datasheet contains preliminary data; supplementary data will be published at a later date. Fairchild Semiconductor reserves the right to make changes at any time without notice to improve design.
No Identification Needed	Full Production	Datasheet contains final specifications. Fairchild Semiconductor reserves the right to make changes at any time without notice to improve the design.
Obsolete	Not In Production	Datasheet contains specifications on a product that is discontinued by Fairchild Semiconductor. The datasheet is for reference information only.

Rev. I66