Kingbright

KADS-8070 SERIES

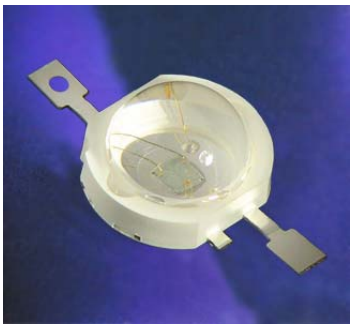

ATTENTION
OBSERVE PRECAUTIONS
FOR HANDLING
ELECTROSTATIC
DISCHARGE
SENSITIVE
DEVICES

Features

- ●Super high flux output and high luminance.
- ●Designed for high current operation.
- ●Low thermal resistance.
- ●Silicone resin with silicone lens.
- ●Compatible with IR-reflow processes.
- ●ESD protection .
- ●Package : 500pcs / reel.
- ●RoHS compliant.

Applications

- ● Substitution of micro incandescent lamps.
- ● Portable light source.
- ● Signal and symbol luminaire for orientation.
- ● Marker lights (e.g. steps, exit ways, etc).
- ● Decorative and entertainment lighting.
- ● Commercial and residential lighting.
- ● Emergency-vehicle lighting.

Application Note

Static electricity and surge damage the LEDS.
It is recommended to use a wrist band or anti-electrostatic glove when handling the LEDs.
All devices, equipment and machinery must be electrically grounded.

Package Dimensions

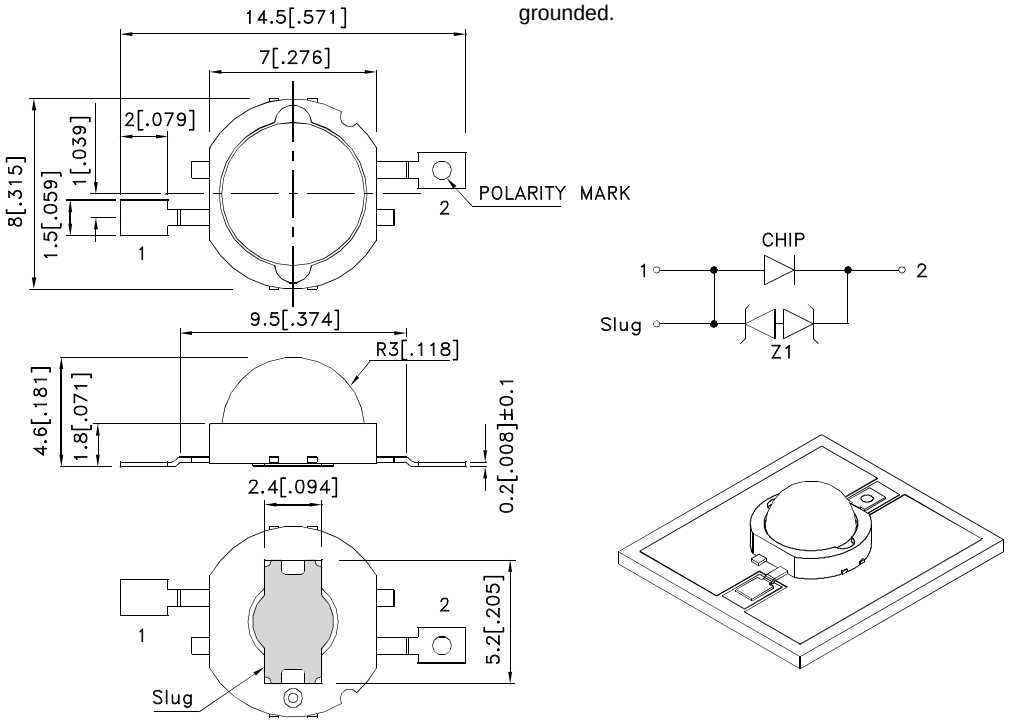

Notes:
1. All dimensions are in millimeters (inches).
2. Tolerance is ±0.25(0.01") unless otherwise noted.
3. The specifications, characteristics and technical data described in the datasheet are subject to change without prior notice.
4. The device has a single mounting surface. The device must be mounted according to the specifications.

Flux Characteristics at 350mA Ambient Temperature, T_a = 25°C

Color	Part No.	Luminous Flux (lm) @ 350mA [1]			Typical Luminous Flux (lm) [1]
		Code.	Min.	Max.	Typ.
Reddish-Orange(AlGaInP)	KADS-8070SE28Z1S	B6	24	29	30
		B7	29	35	
		B8	35	42	
Super Bright Yellow (AlGaInP)	KADS-8070SY28Z1S	B5	20	24	28
		B6	24	29	
		B7	29	35	
		B8	35	42	
Green(AlGaInN)	KADS-8070ZG10Z1S	B9	42	50	62
		B10	50	60	
		B11	60	70	
		B12	70	80	
Blue(InGaN)	KADS-8070QB12Z1S	B2	12	14	17
		B3	14	17	
		B4	17	20	
		B5	20	24	
Blue(InGaN)	KADS-8070QB38Z1S	A17	8.6	10	12
		B1	10	12	
		B2	12	14	
		B3	14	17	
Blue(AlGaInN)	KADS-8070QB10Z1S	B2	12	14	17
		B3	14	17	
		B4	17	20	

Note:
1.Minimum luminous flux performance guaranteed within published operating conditions.Kingbright maintains tolerance of +/-15% on flux.

Optical Characteristics at 350mA Ambient Temperature, T_a = 25°C

Part No.	Dominant Wavelength [1] λ_D			Typical Spectral Halfwidth [2] (nm) $\Delta\lambda 1/2$	Typical Temperature Coefficient of Dominant Wavelength (nm/°C) $\Delta\lambda_D/\Delta T$	Typical Viewing Angle [3] (degrees) $2\theta 1/2$
	Min.	Typ.	Max.			
KADS-8070SE28Z1S	619nm	625nm	629nm	30	0.05	90°
KADS-8070SY28Z1S	586nm	588nm	594nm	20	0.06	90°
KADS-8070ZG10Z1S	520nm	530nm	535nm	35	0.14	90°
KADS-8070QB12Z1S	450nm	454nm	457.5nm	25	0.04	90°
KADS-8070QB38Z1S	445nm	450nm	455nm	24	0.03	90°
KADS-8070QB10Z1S	-	452nm	458nm	20	0.1	90°

Notes:
1.Dominant wavelength is derived from the CIE 1931 Chromaticity diagram and represents the perceived color.
2.Spectral width at 1/2 of the peak intensity.
3.Viewing angle is the off axis angle from lamp centerline where the luminous intensity is 1/2 of the peak value.

Electrical Characteristics at 350mA Ambient Temperature, T_a = 25°C

Part No.	Forward Voltage V_f [1] (V)			Typical Temperature Coefficient of Forward Voltage [2] (mV/°C) $\Delta V_f / \Delta T$	Typical Thermal Resistance (°C/W) $R_{th\ j\text{-}slug}$
	Min.	Typ.	Max.		
KADS-8070SE28Z1S	2.0	2.5	3.0	-3.2	16
KADS-8070SY28Z1S	2.0	2.5	3.0	-3.2	9
KADS-8070ZG10Z1S	2.8	3.3	3.8	-2.3	12
KADS-8070QB12Z1S	-	3.5	4.1	-2.2	11
KADS-8070QB38Z1S	-	3.5	4.1	-2.2	11
KADS-8070QB10Z1S	2.7	3.2	3.6	-3.2	9

Notes:
1.Kingbright maintains a tolerance of +/- 0.1V on forward voltage measurements.
2.Measured between 25 °C < T_J < 110 °C at I_F = 350 mA.

Absolute Maximum Ratings

Parameter	Reddish-Orange /Super Bright Yellow/Green/Blue
DC Forward Current (mA) [1]	350
Peak Pusled Forward Current (mA)	500
Average Forward Current (mA)	350
Reverse Voltage (V)	5
ESD Sensitivity	8000V HBM
LED Junction Temperature (°C)	110
Operation Temperature (°C)	-40 to + 100
Storage Temperature (°C)	-40 to + 110
Soldering Temperature (°C)	260 For 5 Seconds

Note:
1. Proper current derating must be observed to maintain junction temperature below the maximum.

Moisture Sensitivity

KADS-8070 LEDs are packaged in airtight and moisture-resistant bags to prevent moisture absorption which may lead to catastrophic failure in reflow soldering process. Kingbright recommends that the devices must be baked before soldering if they are removed from the original package, and are exposed to environmental conditions for longer than the durations (unit: days) defined in the table below. Recommended baking conditions are 24 hours at 80ºC.

Temperature	Maximum Percent Relative Humidity						
	30%	40%	50%	60%	70%	80%	90%
30°C	9	5	4	3	1	1	1
25°C	12	7	5	4	2	1	1
20°C	17	9	7	6	2	2	1

Storage Conditions

After being removed from the original sealed package, KADS-8070 LEDs should be stored at a temperature of 25 ºC with a relative humidity lower than 10%. Under such conditions, storage duration is excluded from the exposure duration as defined in the Moisture Sensitivity section.

Wavelength Characteristics T_a = 25°C

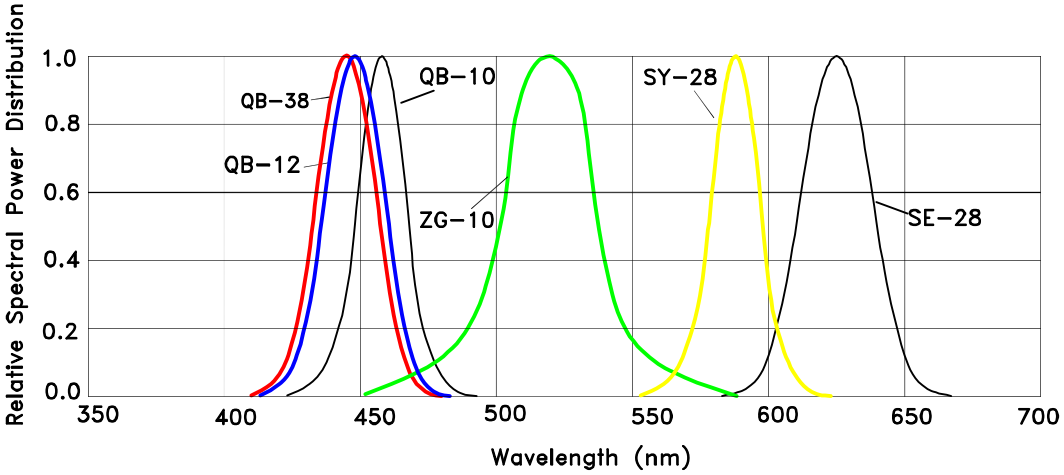

Relative intensity vs. wavelength.

Light Output Characteristics

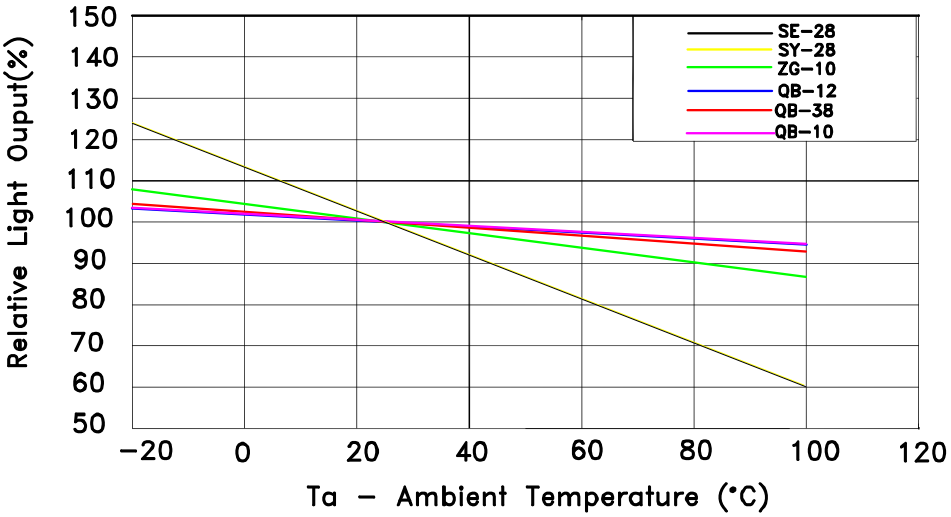

Relative light output vs. Ambient temperature.

Forward Current Characteristics, T_a = 25°C

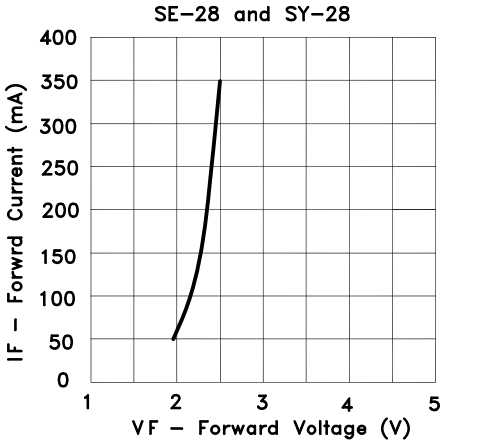

Forward current vs. forward voltage.

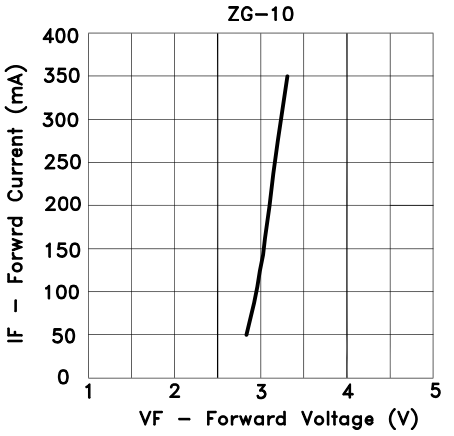

Forward current vs. forward voltage.

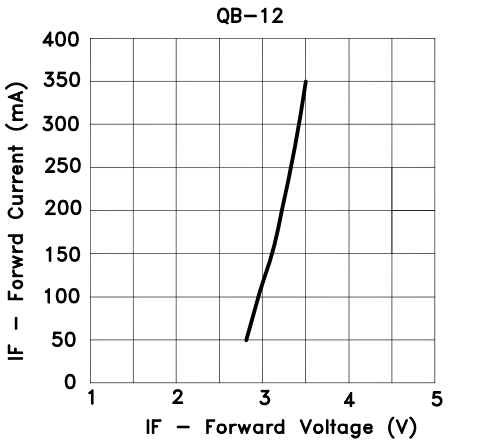

Forward current vs. forward voltage.

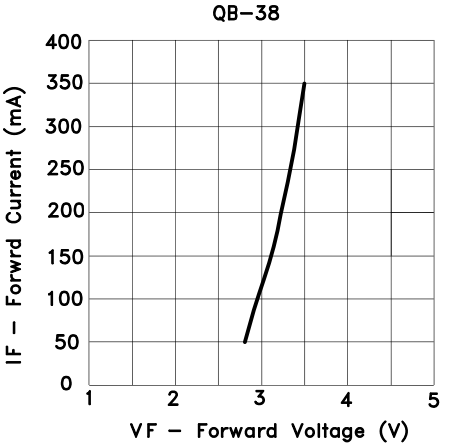

Forward current vs. forward voltage.

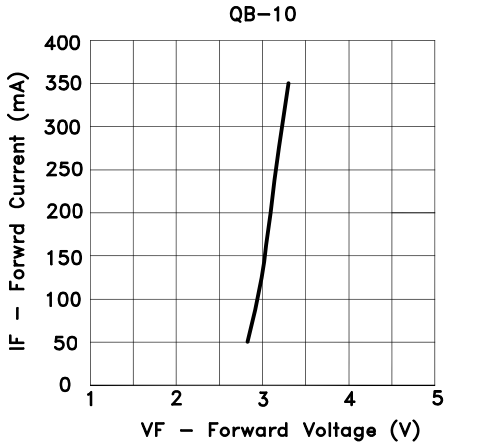

Forward current vs. forward voltage.

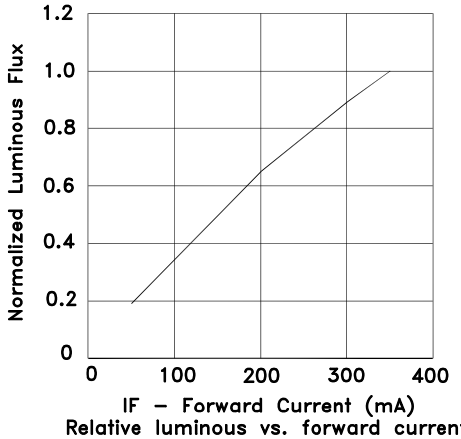

Relative luminous vs. forward current at Ta= 25°C maintained.

Current Derating Curves

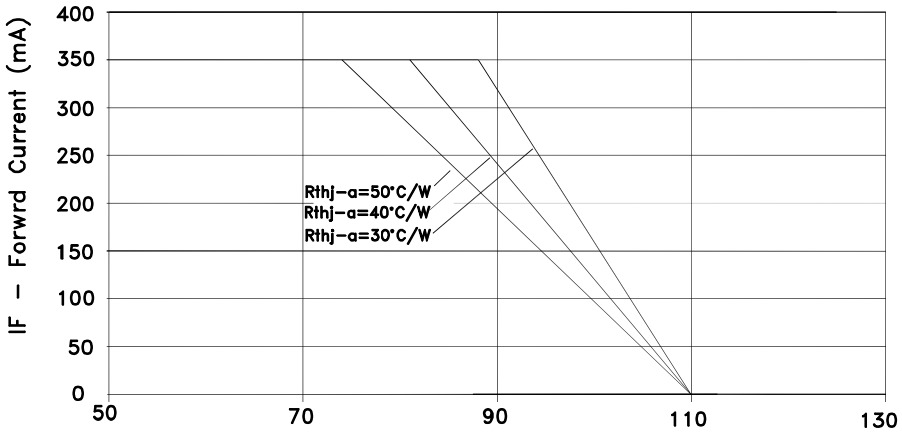

Ta – Ambient Temperature (°C)
Maximum forward current vs. ambient temperature, based on Tjmax.=110°C for SE–28,SY–28

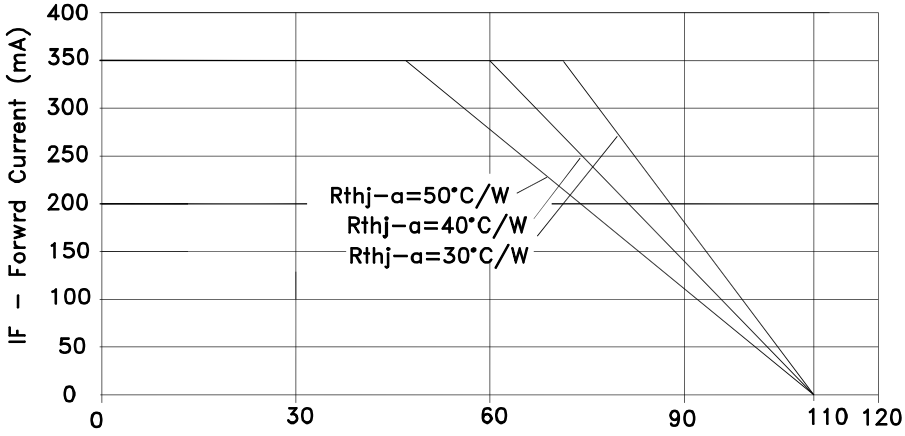

Ta – Ambient Temperature (°C)
Maximum forward current vs. ambient temperature, based on Tjmax.=110°C for QB–38,QB–12,ZG–10,QB–10.

Representative Typical Spatial Radiation Pattern

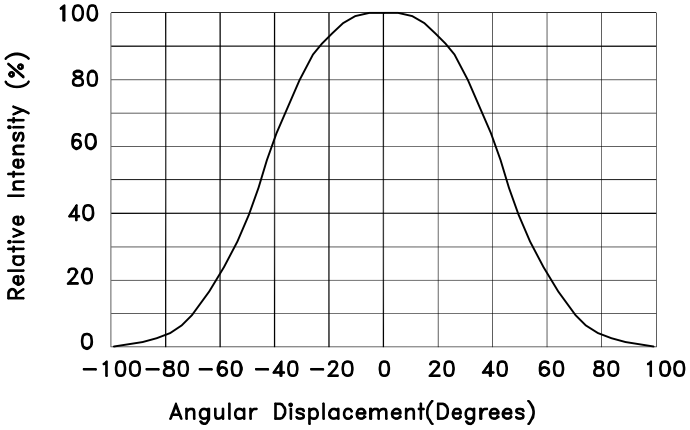

Reflow soldering is recommended and the soldering profile is shown below.
Other soldering methods are not recommended as they might cause damage to the product.

Reflow Soldering Profile For Lead-free SMT Process.

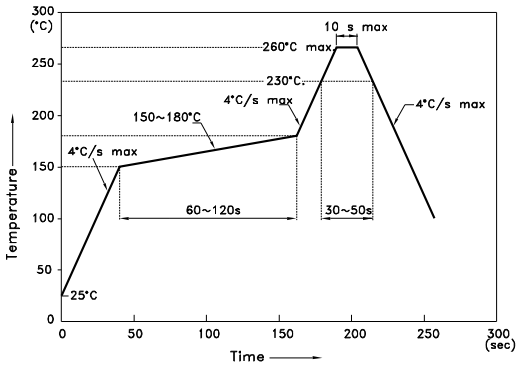

NOTES:
1. We recommend the reflow temperature 245°C(+/−5°C).The maximum soldering temperature should be limited to 260°C.
2. Don't cause stress to the epoxy resin while it is exposed to high temperature.
3. Number of reflow process shall be 2 times or less.

Reel Dimension

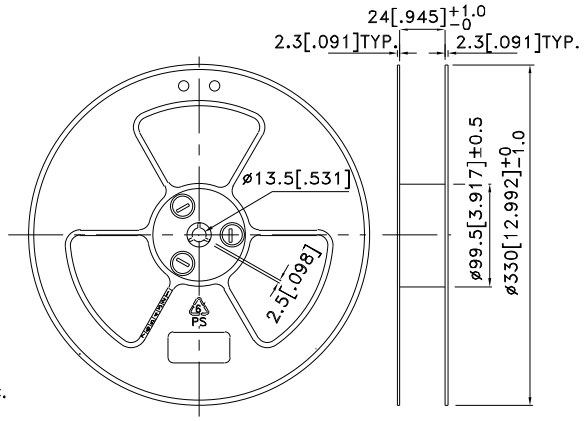

Recommended Soldering Pattern
(Units : mm ; Tolerance: ± 0.1)

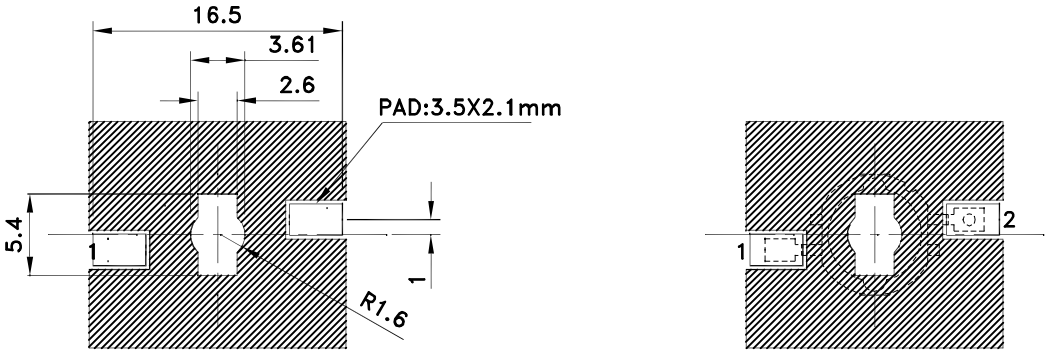

Tape Dimensions
(Units : mm)

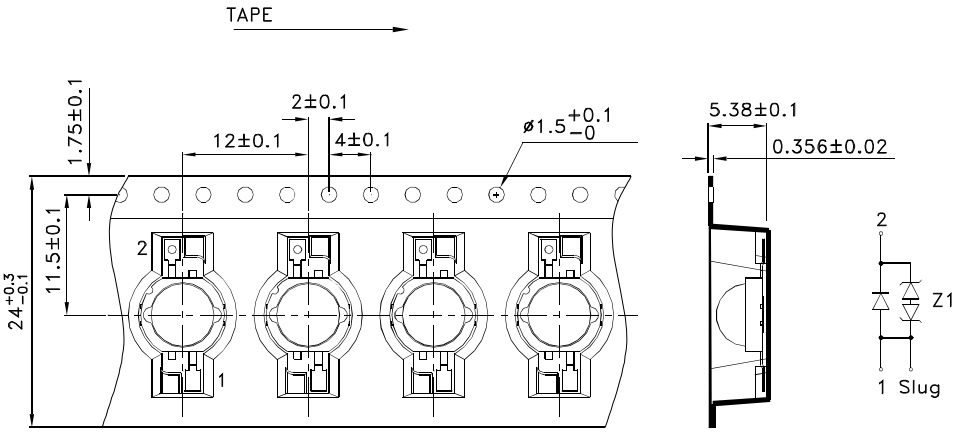

PACKING & LABEL SPECIFICATIONS **KADS-8070 SERIES**