Features

- Waterproof IP67 rating guarantees protection against extended immersion under higher pressures
- Voltage rating of 250V AC/DC
- Current rating of 4A
- Gold-plated bronze contacts for corrosion resistance
- Threaded mating type
- Operating temperature range from -25°C to 80°C
- Gold contact plating
- Nickel plated brass shell
- Conforms to standards IEC 61076-2-101

RS PRO Female M12 4 Pin D-code Connector

RS Stock No.: 0783514

RS PRO is the own brand of RS. The RS PRO Seal of Approval is your assurance of professional quality, a guarantee that every part is rigorously tested, inspected, and audited against demanding standards. Making RS PRO the Smart Choice for our customers.

Product Description

The 4 pin female M12 metal front mount socket connector had been widely used for automative and sensor application, it's unshielded.

General Specifications

Number of Contacts	4
Shielding	Unshielded
Housing Material	Brass
Contact Material	Bronze
Contact Plating	Gold
Pole Format	4 Pin
Contact Gender	Female
Mating Type	Threaded
Body Orientation	Straight
Mating Cycles	500
Cable limits	/
Typical conductor size	22AWG
Application	Sensor, automation

Mechanical Specifications

Connector Size	Standard
Termination Method	Solder
Mounting Type	Panel mount
Panel Cut-Out	φ16.1mm*13.5mm
Contact Diameter	φ1.0mm

Electrical Specifications

Current Rating	4A
Voltage Rating	250V AC/DC
Insulation Resistance	≥100MΩ

Protection Category

IP Rating	IP67(Lock)

Approvals

Declarations	MFR Declaration of Conformity
Hazardous Area Certification	None
Standards Met	IEC 61076

Similar Products
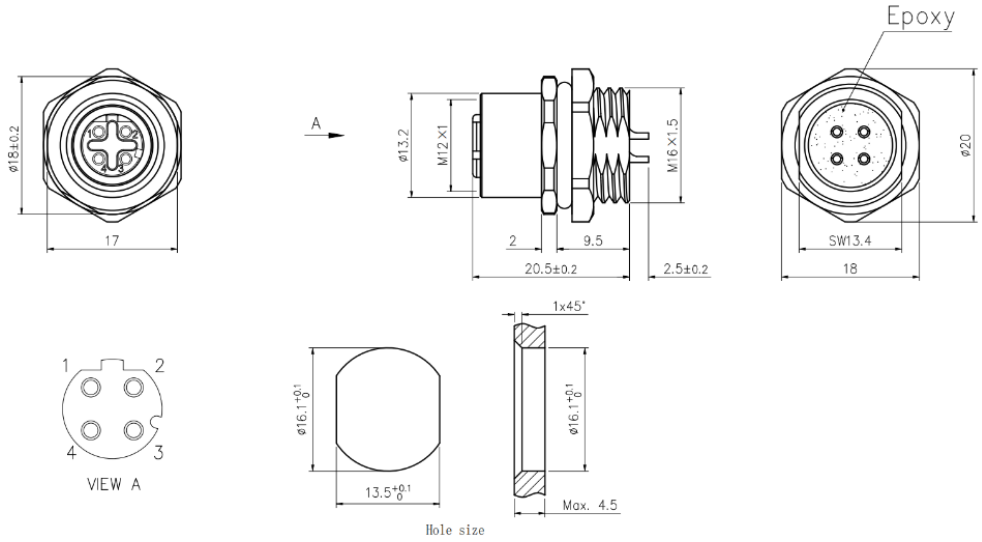
Stock No.	Brand	Product Name	Attribute 1	Attribute 2	Attribute 3