EC Temperature Controller

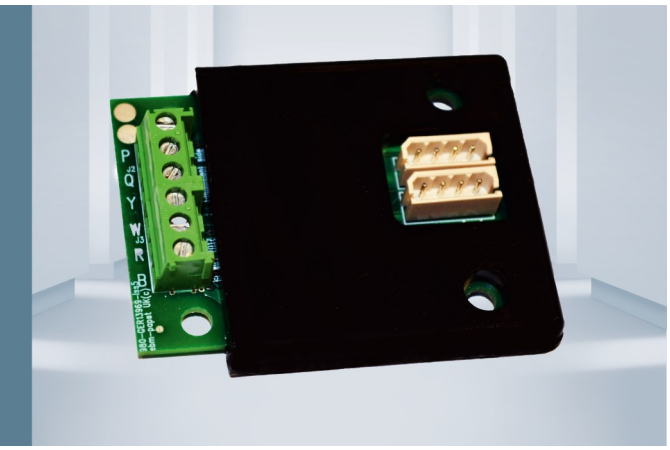

– **Features:**

Temperature sensitive speed control
Choice of pre-set profiles
Alarm output for fan failure, over-temperature, sensor failure
Rugged over-moulded construction
Supplied with NTC temperature sensor lead (2m)

Part Number	Supply Voltage VDC	Temperature Profile °C	Ambient Temperature °C	Max Humidity % RH	Width mm	Height mm	Depth mm
CECXX2040MC-R	10-57	20-40	-30 - +70	90	45	56.5	8
CECXX3555MC-R	10-57	35-55	-30 - +70	90	45	56.5	8

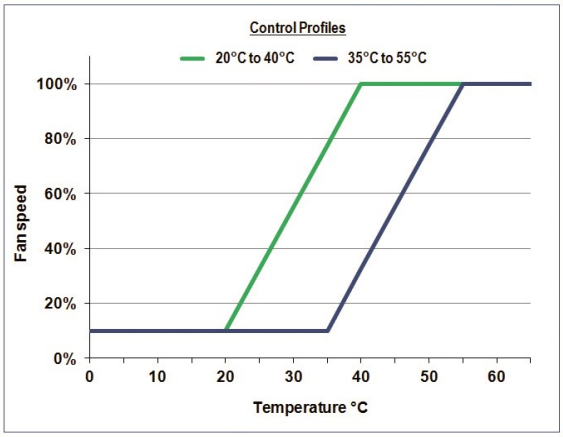

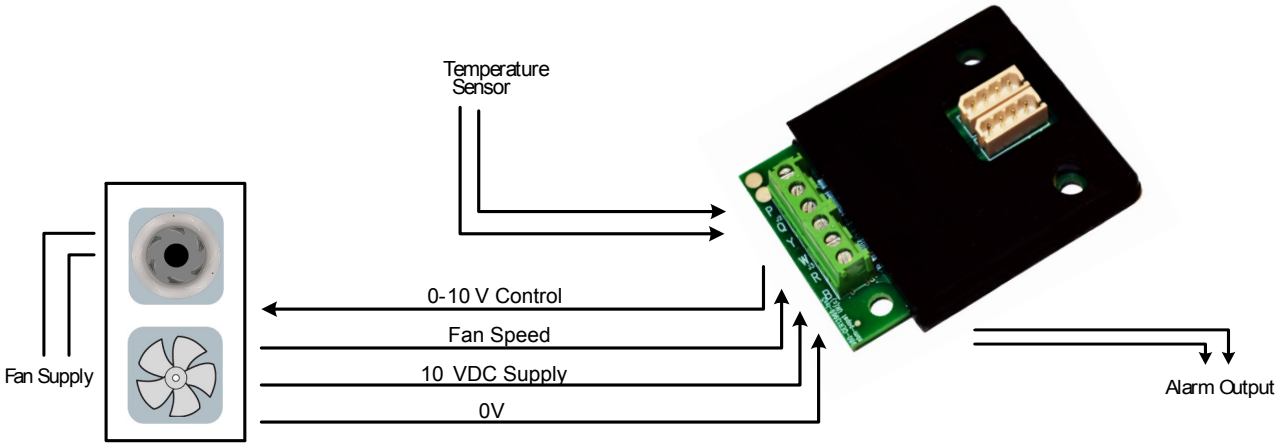

ebm-papst UK Ltd, Chelmsford Business Park, Chelmsford, Essex, CM2 5EZ
01245 468555 sales@uk.ebmpapst.com www.ebmpapst.co.uk