

Image may differ from product. See technical specification for details.

71816 CDGA/HCP4

Super-precision, high-capacity, universally matchable single row angular contact ball bearing

These super-precision, high-capacity, single row angular contact ball bearings accommodate radial and axial loads acting simultaneously, where the axial load acts in one direction only. They are designed to accommodate heavy loads at relatively high speeds under low to moderate operating temperatures. Being universally matchable, they can be used together in arrangements to provide effective load sharing, within a predetermined preload range, without the use of shims or similar devices.

- Very high running accuracy
- Very high load carrying capacity
- Relatively high speed and stiffness
- Universally matchable

Overview

Dimensions

Bore diameter	80 mm
Outside diameter	100 mm
Width	10 mm
Contact angle	15 °

Performance

Basic dynamic load rating	15.3 kN
Basic static load rating	18.3 kN
Note	Refer to catalogue data or contact SKF for the attainable speeds

Properties

Contact type	Normal contact (two-point contact)
Number of rows	1
Ring type	One-piece inner and outer rings
Design	High-capacity D
Universal matching bearing	Yes, back-to-back (<>), face-to-face (><) or tandem (>>)
Matched arrangement	No
Matched condition (axial clearance/ preload)	Measuring load, class A
Tolerance class	P4
Material, bearing	Hybrid (ceramic balls)
Coating	Without
Sealing	Without
Lubricant	None
Indicative carbon footprint for new product	0.51 kg CO_2e

Logistics

Product net weight	0.138 kg
eClass code	23-05-08-03
UNSPSC code	31171531

Technical specification

Universal matching bearing(s)	Yes, back-to-back (<>), face-to-face (><) or tandem (>>)

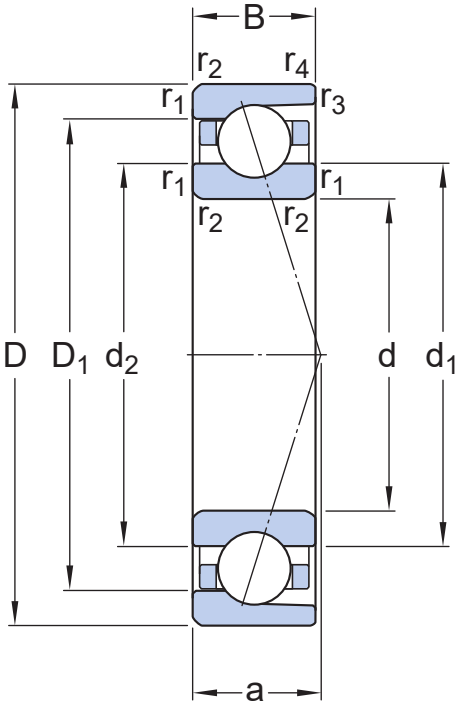

Dimensions

d	80 mm	Bore diameter
D	100 mm	Outside diameter
B	10 mm	Width
d_1	86.7 mm	Shoulder diameter of inner ring (large side face)
d_2	86.7 mm	Shoulder diameter of inner ring (small side face)
D_1	93.5 mm	Shoulder diameter of outer ring (large side face)
$r_{1,2}$	min. 0.6 mm	Chamfer dimension
$r_{3,4}$	min. 0.3 mm	Chamfer dimension
a	17.1 mm	Distance from side face to pressure point

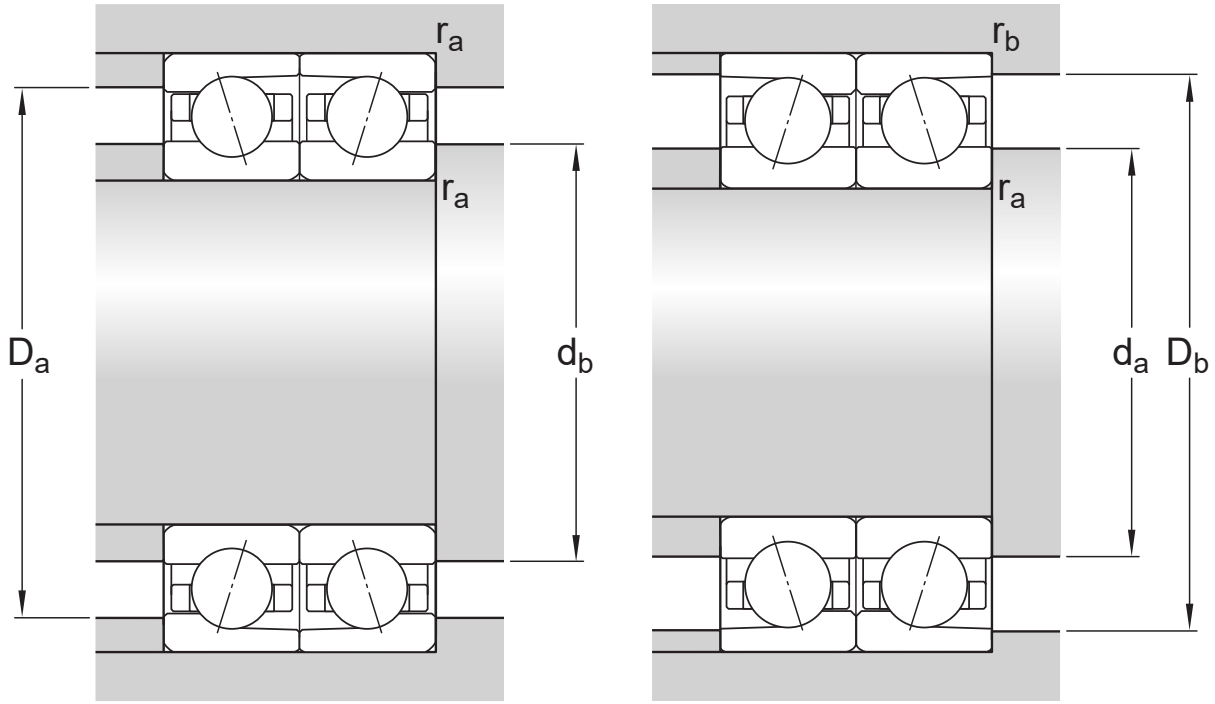

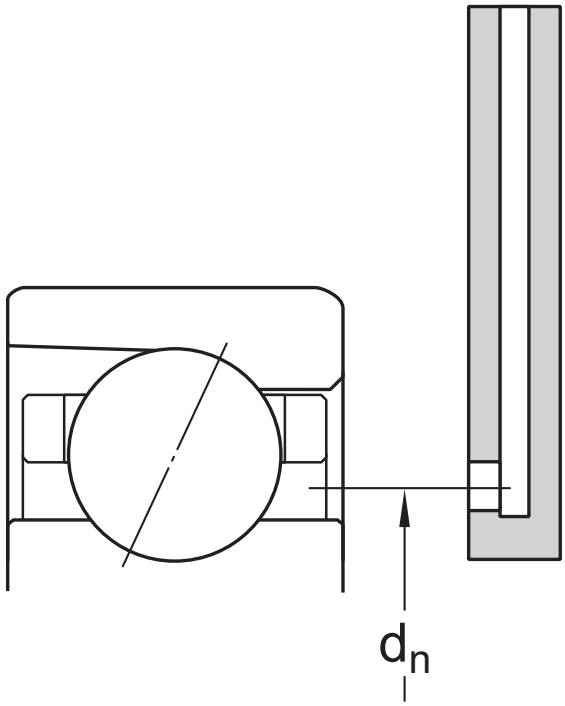

Abutment dimensions

d_a	min. 83.2 mm	Diameter of shaft abutment
d_b	min. 83.2 mm	Diameter of shaft abutment
D_a	max. 96.8 mm	Diameter of housing abutment
D_b	max. 98 mm	Diameter of housing abutment

r_a	max. 0.6 mm	Radius of fillet
r_b	max. 0.3 mm	Radius of fillet
d_n	87.4 mm	Position of oil nozzle

Calculation data

Basic dynamic load rating	C	15.3 kN
Basic static load rating	C_0	18.3 kN
Fatigue load limit	P_u	0.56 kN
Attainable speeds		Refer to catalogue data or contact SKF for the attainable speeds
Contact angle	α	15 °
Ball diameter	D_w	5.556 mm
Number of rows	i	1
Number of balls (per bearing)	z	35
Reference grease quantity (per bearing)	G_{ref}	1.6 cm^3

PRELOAD AND STIFFNESS (BACK-TO-BACK, FACE-TO-FACE)

Preload class		A
Preload when unmounted	G	78 N
Axial stiffness		82 N/µm

CORRECTION FACTORS FOR PRELOAD CALCULATION

Correction factor dependent on bearing series and size	f	1.4
Correction factor dependent on contact angle	f_1	1
Correction factor, preload class A	f_{2A}	1
Correction factor for hybrid bearings	f_{HC}	1

FACTORS FOR EQUIVALENT BEARING LOAD CALCULATION

Calculation factor for equivalent loads	f_0	17.4
Additional factors for equivalent loads		Refer to Notes 1 and 2 below

Tolerances and clearances

GENERAL BEARING SPECIFICATIONS

- Tolerances: P4A, P4B, P4, PA9A, P2

PRINCIPLES OF BEARING SELECTION AND APPLICATION

- Chamfer dimensions
- Seat tolerances for standard conditions: shafts, housings
- Values for ISO tolerance classes: shafts, housings
- Speed dependent initial grease fill → Initial grease fill
- Clamping and fitting forces: D design, E design, B design
- Designation suffixes H, H1, L and L1 identify variants for direct oil-air lubrication.

FACTORS FOR EQUIVALENT BEARING LOAD CALCULATION

- Note 1: Single bearings and bearings arranged in tandem
- Note 2: Bearings paired back-to-back or face-to-face

SPEED REDUCTION FACTORS FOR SPEED CALCULATION

Number of bearings	Arrangement	Designation suffix	Speed reduction factors														
		for matched sets	for bearings in the series														
			718 .. D, 719 .. E, and 70 .. E						S70 .. W	719 .. A and 70 .. A	719 .. B and 70 .. B			719 .. D, 70 .. D and 72 .. D			
			for preload class								for preload class			for preload class			
			A	L	B	M	C	F	–	–	A	B	C	A	B	C	D
2	Back-to-back	DB	0,8	–	0,65	–	0,4	–	0,81	0,8	0,83	0,78	0,58	0,81	0,75	0,65	0,4
	Face-to-face	DF	0,77	–	0,61	–	0,36	–	–	–	0,8	0,74	0,54	0,77	0,72	0,61	0,36
3	Back-to-back and tandem	TBT	0,69	0,72	0,49	0,58	0,25	0,36	–	–	0,72	0,66	0,4	0,7	0,63	0,49	0,25
	Face-to-face and tandem	TFT	0,63	0,66	0,42	0,49	0,17	0,24	–	–	0,64	0,56	0,3	0,63	0,56	0,42	0,17
4	Tandem back-to-back	QBC	0,64	–	0,53	–	0,32	–	–	–	0,67	0,64	0,48	0,64	0,6	0,53	0,32
	Tandem face-to-face	QFC	0,62	–	0,48	–	0,27	–	–	–	0,64	0,6	0,41	0,62	0,58	0,48	0,27

For spring-loaded tandem sets, designation suffix DT, a speed reduction factor of 0,9 should be applied.

Terms of use

By accessing and using this website / app owned and published by AB SKF (publ.) (556007-3495 · Gothenburg) (“SKF”), you agree to the following terms and conditions:

Warranty Disclaimer and Limitation of Liability

Although every care has been taken to assure the accuracy of the information on this website / app, SKF provides this information "AS IS" and DISCLAIMS ALL WARRANTIES, EXPRESS OR IMPLIED, INCLUDING, BUT NOT LIMITED TO, IMPLIED WARRANTIES OF MERCHANTABILITY AND FITNESS FOR A PARTICULAR PURPOSE. You acknowledge that your use of this website / app is at your sole risk, that you assume full responsibility for all costs associated with use of this website / app, and that SKF shall not be liable for any direct, incidental, consequential, or indirect damages of any kind arising out of your access to, or use of the information or software made available on this website / app.

Any warranties and representations in this website / app for SKF products or services that you purchase or use will be subject to the agreed upon terms and conditions in the contract for such product or service.

Further, for non-SKF websites / apps that are referenced in our website / app or where a hyperlink appears, SKF makes no warranties concerning the accuracy or reliability of the information in these websites / apps and assumes no responsibility for material created or published by third parties contained therein. In addition, SKF does not warrant that this website / app or these other linked websites / apps are free from viruses or other harmful elements.

Third Party Services

When viewing YouTube content via the SKF website(s) (i.e. using YouTube API Services), you agree to be bound by the YouTube Terms of Service.

Copyright

Copyright in this website / app copyright of the information and software made available on this website / app rest with SKF or its licensors. All rights are reserved. All licensed material will reference the licensor that has granted SKF the right to use the material. The information and software made available on this website / app may not be reproduced, duplicated, copied, transferred, distributed, stored, modified, downloaded or otherwise exploited for any commercial use without the prior written approval of SKF. However, it may be reproduced, stored and downloaded for use by individuals without prior written approval of SKF. Under no circumstances may this information or software be supplied to third parties.

This website /app includes certain images used under license from Shutterstock, Inc.

Trademarks and Patents

All trademarks, brand names, and corporate logos displayed on the website / app are the property of SKF or its licensors, and may not be used in any way without prior written approval by SKF. All licensed trademarks published on this website / app reference the licensor that has granted SKF the right to use the trademark. Access to this website / app does not grant to the user any license under any patents owned by or licensed to SKF.

Changes

SKF reserves the right to make changes or additions to this website / app at any time.