8ECM0001.1111C-0

Information:

Due to their assembly, these cables can only be used with the following ACOPOS P3 servo drives:

- **8EI1X6xxSxx.xxxx-1**
- **8EI2X2xxxxx.xxxx-1**
- **8EI4X5xxxxx.xxxx-1**
- **8EI8X8xxxxx.xxxx-1**

1 General information

- Can be used in cable drag chains
- Assembled specifically for use with ACOPOS P3 servo drives and B&R servo motors
- speedtec - Innovative connector system for fast and secure connections

2 Order data

Order number	Short description	Figure
	1.5 mm² motor cables	
8ECM0001.1111C-0	ACOPOS P3 motor cable, length 1 m, 4x 1.5 mm² + 2x 2x 0.75 mm², 8-pin female speedtec motor connector size 1, can be used in cable drag chains	

Table 1: 8ECM0001.1111C-0 - Order data

3 Technical data

Order number	8ECM0001.1111C-0
General information	
Cable cross section	4x 1.5 mm² + 2x 2x 0.75 mm²
Durability	Oil resistance per HD 22.10 appendix A DIN EN 60811-404 [1)]
Certification	E170315 cRUus AWM STYLE 21223 AWM I/II A/B 80°C 1000 V FT1 [1)]
Certifications	
CE	Yes
UKCA	Yes
EAC	Yes
Cable construction	
Power lines	
Quantity	4
Wire insulation	PP
Wire colors	Black, brown, blue, yellow/green
Variant	Tinned copper stranded wire
Cross section	1.5 mm²
Shield	No
Stranding	No
Signal line	
Quantity	4
Wire insulation	PP
Wire colors	White, white/red, white/blue, white/green
Variant	Tinned copper stranded wire
Cross section	0.75 mm²
Shield	Individually shielded in pairs, tinned copper braiding, optical coverage >85% and foil shield
Stranding	White with white/red and white/blue with white/green
Cable stranding	With filler elements and foil shield
Cable shield	Tinned copper braiding, optical coverage >85% and foil shield
Outer jacket	
Material	TPU
Color	Orange, similar to RAL 2003 flat
Labeling	B&R 4 G 1.5 + 2 x (2x0.75)C C E170315 cRUus AWM STYLE 21223 AWM I/II A/B 80°C 1000 V FT1 production order number [1)]

Table 2: 8ECM0001.1111C-0 - Technical data

Order number	8ECM0001.1111C-0
Connector	
Type	8-pin female speedtec motor connector
Mating cycles	<500
Contacts	8 (4 power and 4 signal contacts)
Degree of protection per EN 60529	IP66/67 when connected
Electrical properties [1]	
Operating voltage	Max. 1000 VAC (UL)
Test voltage	
Wire - Wire	4 kV
Wire - Shield	4 kV
Conductor resistance	
Power lines	≤13.7 Ω/km
Signal line	≤26.7 Ω/km
Insulation resistance	≥500 MΩ*km
Current-carrying capacity per DIN VDE 0298 part 4, table 11	
Wall mounting	20 A
Installed in conduit or cable duct	17.8 A
Installed in cable tray	20.9 A
Ambient conditions [1]	
Temperature	
Moving	-20°C to +80°C
Static	-20°C to +90°C
Mechanical properties [1]	
Dimensions	
Length	1 m
Diameter	12.2 mm ±0.3 mm
Bend radius	
Single bend	>38 mm
Moving	>94 mm
Drag chain data	
Acceleration	Max. 50 m/s² (depends on the length of the travel path)
Flex cycles [2]	≥5,000,000
Velocity	Max. 300 m/min
Weight	0.2 kg

Table 2: 8ECM0001.1111C-0 - Technical data

1) Values refer to the raw cable being used.
2) At an ambient temperature from -20°C to +60°C.

4 1.5 mm² - 4 mm² motor cables

Construction

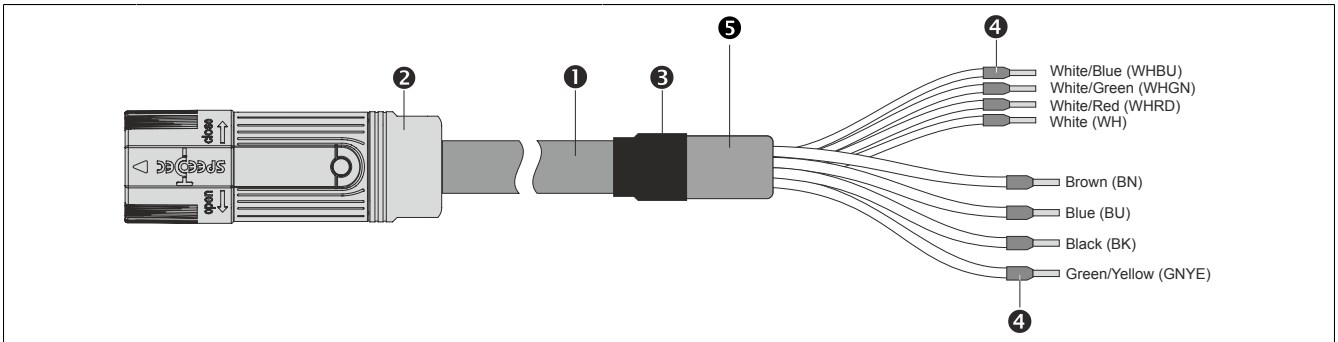

Pos.	Description	Note
1	Motor line	4x 1.5 mm² + 2x 2x 0.75 mm² (for 8ECMxxxx.1111C-0) 4x 4 mm² + 2x 0.75 mm² + 2x 1 mm² (for 8ECMxxxx.1312C-0)
2	8-pin female circular connector	Dimensions: ø 28 x 78 mm
3	Heat shrink tubing	
4	Wire end sleeve	
5	Aluminum belt	With conductive glue

Table 3: 1.5 mm² - 4 mm² motor cables - Construction

Pinout

Circular connector	Pin	Description	Function
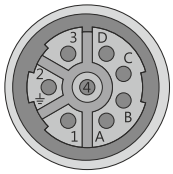	1	U	Motor connection U
	2	PE	Protective ground conductor
	3	W	Motor connection W
	4	V	Motor connection V
	A	T+	Temperature +
	B	T-	Temperature -
	C	B+	Brake +
	D	B-	Brake -

Table 4: 1.5 mm² - 4 mm² motor cables - Pinout

Cable diagram

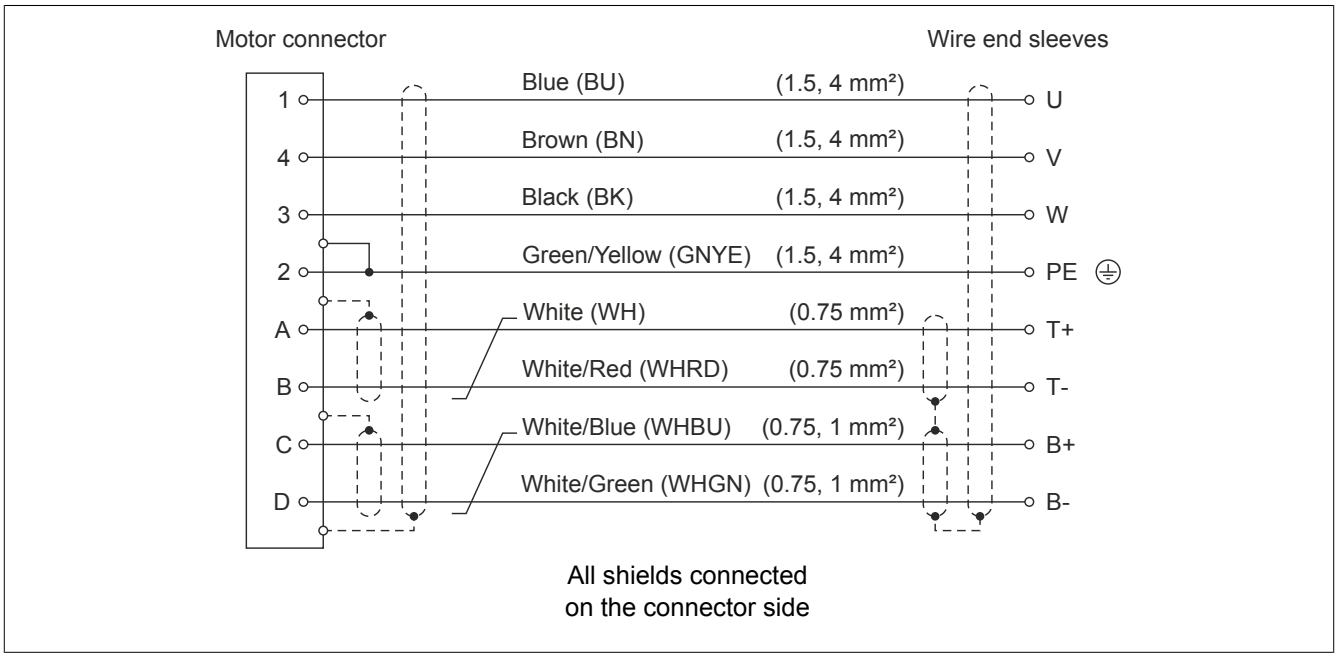

Figure 1: 1.5 mm² - 4 mm² motor cables - Cable diagram