1A Variable Output LDO Regulator

BD00HC0WEFJ

●General Description

BD00HC0WEFJ is a LDO regulator with output current 1.0A. The output accuracy is ±1% of the output voltage. The output voltage of the variable output voltage device can be varied from 0.8 to 7.0V using external resistors. It has a package type: HTSOP-J8 (4.90mm x 6.00mm x 1.00mm), and can be used in a wide variety of digital appliances. The device has built in over current protection to protect the device when output is shorted, 0μA shutdown mode and thermal shutdown circuit to protect the device during over load conditions. The LDO regulator is usable with ceramic capacitors that enable a smaller layout and longer life.

●Features

- +/-1% output voltage accuracy
- Built-in Over Current Protection circuit (OCP)
- Built-in Thermal Shut Down circuit (TSD)
- Zero μA Shutdown mode

●Package

	(Typ.)	(Typ.)	(Max.)
HTSOP-J8	4.90mm	x 6.00mm	x 1.00mm

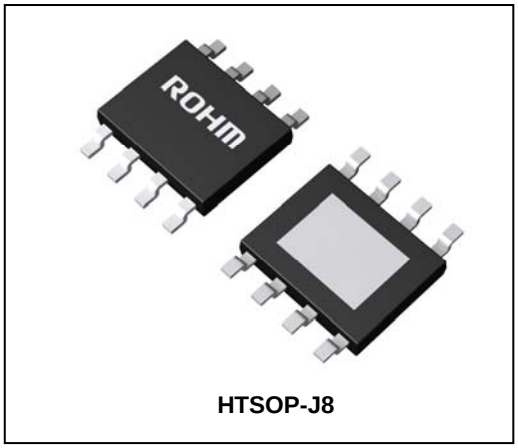

HTSOP-J8

●Key Specifications

- Input Power Supply Voltage range: 4.5V to 8.0V
- Output voltage range: 0.8V to 7.0V
- Output current: 1.0A (Max.)
- Shutdown current: 0μA(Typ.)
- Operating temperature range: -25℃ to +85℃

●Typical Application Circuit

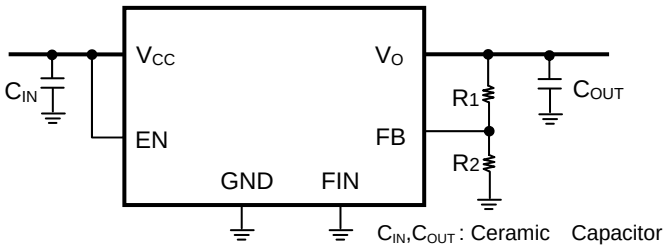

C_{IN},C_{OUT}: Ceramic Capacitor

●Ordering Information

B	D	0	0	H	C	0	W	E	F	J	-	E 2

Part Number	Output voltage	Input voltage range	Output current	Shutdown mode	Package	Packaging and forming specification
	00 : Variable	H:10V	C0:1.0A	"W" : Included	EFJ : HTSOP-J8	E2:Emboss tape reel

○Product structure : Silicon monolithic integrated circuit ○This product is not designed protection against radioactive rays.

© 2013 ROHM Co., Ltd. All rights reserved.

●Block Diagram

BD00HC0WEFJ

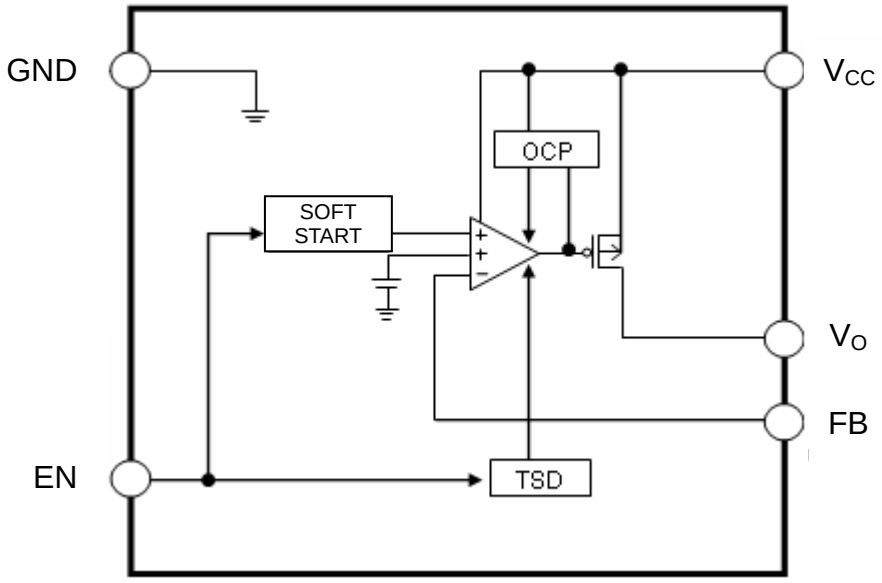

Fig.1 Block Diagram

●Pin Configuration

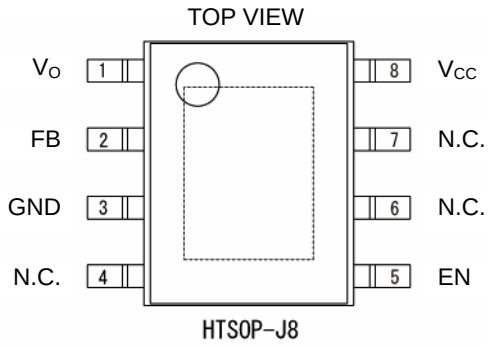

●Pin Description

Pin No.	Pin name	Pin Function
1	V_O	Output pin
2	FB	Feedback pin
3	GND	GND pin
4	N.C.	No Connect (Connect to GND or leave OPEN)
5	EN	Enable pin
6	N.C.	No Connect (Connect to GND or leave OPEN)
7	N.C.	No Connect (Connect to GND or leave OPEN)
8	V_{CC}	Input pin
Reverse	FIN	Substrate (Connect to GND)

© 2013 ROHM Co., Ltd. All rights reserved.

●**Absolute Maximum Ratings** (Ta=25℃)

Parameter		Symbol	Ratings	Unit
Power supply voltage		V_{CC}	10.0 *1	V
EN voltage		V_{EN}	10.0	V
Power dissipation	HTSOP-J8	Pd *2	2110 *2	mW
Operating Temperature Range		Topr	-25 to +85	℃
Storage Temperature Range		Tstg	-55 to +150	℃
Junction Temperature		Tjmax	+150	℃

*1 Not to exceed Power dissipation(Pd)

*2 Reduced by 16.9mW/℃ for each increase in Ta of 1℃ over 25℃. (when mounted on a board 70mm×70mm×1.6mm glass-epoxy board, two layer)

●**Recommended Operating Ratings** (Ta=25℃)

Parameter	Symbol	Ratings		Unit
		Min.	Max.	
Input power supply voltage	V_{CC}	4.5	8.0	V
EN voltage	V_{EN}	0.0	8.0	V
Output voltage setting range	V_O	0.8	7.0	V
Output current	I_O	0.0	1.0	A

●**Electrical Characteristics** (Unless otherwise noted, Ta=25℃, EN=3V, V_{CC}=6V, R_1=43kΩ, R_2=8.2kΩ)

Parameter	Symbol	Limits			Unit	Conditions
		Min.	Typ.	Max.		
Circuit current at shutdown mode	I_{SD}	-	0	5	μA	V_{EN}=0V, OFF mode
Bias current	I_{CC}	-	600	900	μA	
Line regulation	Reg.I	-1	-	1	%	V_{CC}=(V_O+0.92V)→8.0V
Load regulation	Reg I_O	-1.5	-	1.5	%	I_O=0→1.0A
Minimum dropout voltage1	V_{CO1}	-	0.15	0.23	V	V_{CC}=5V, I_O =250mA
Minimum dropout voltage2	V_{CO2}	-	0.30	0.46	V	V_{CC}=5V, I_O =500mA
Minimum dropout voltage3	V_{CO3}	-	0.45	0.69	V	V_{CC}=5V, I_O =750mA
Minimum dropout voltage4	V_{CO4}	-	0.60	0.92	V	V_{CC}=5V, I_O =1.0A
Output reference voltage	V_{FB}	0.792	0.800	0.808	V	I_O=0mA
EN Low voltage	V_{EN} (Low)	0	-	0.8	V	
EN High voltage	V_{EN} (High)	2.4	-	8.0	V	
EN Bias current	I_{EN}	1	3	9	μA	

© 2013 ROHM Co., Ltd. All rights reserved.

●**Typical Performance Curves**

(Unless otherwise noted, Ta=25℃, EN=3V, V_{CC}=6V, R_1=43kΩ, R_2=8.2kΩ)

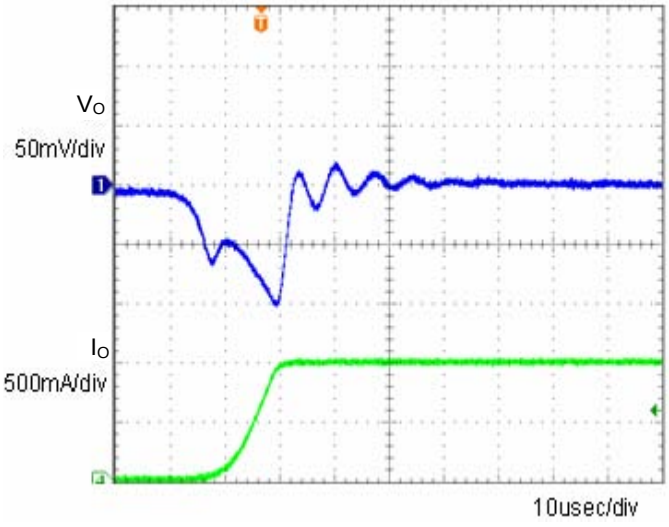

Fig.2
Transient Response
(0→1A)
Co=1µF

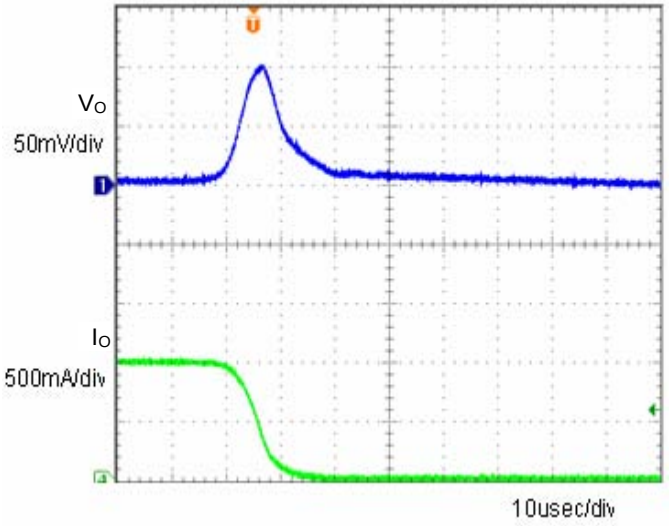

Fig.3
Transient Response
(1→0A)
Co=1µF

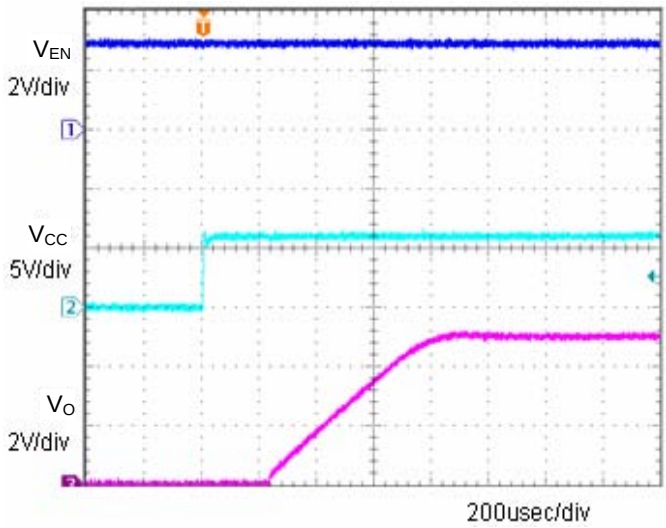

Fig.4
Input sequence 1
Co=1µF

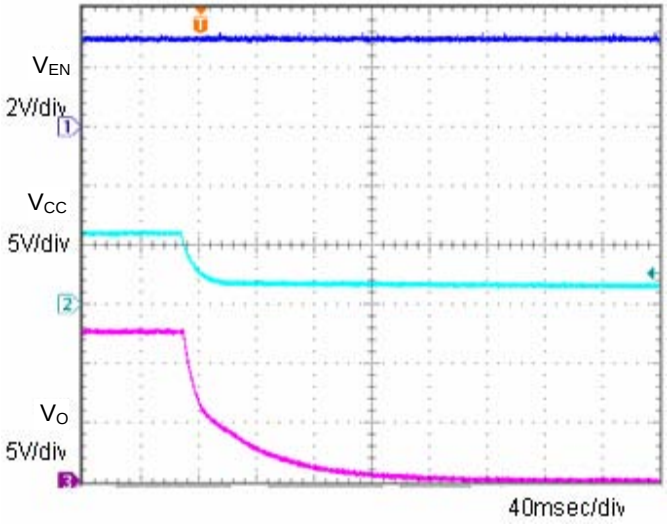

Fig.5
OFF sequence 1
Co=1µF

© 2013 ROHM Co., Ltd. All rights reserved.

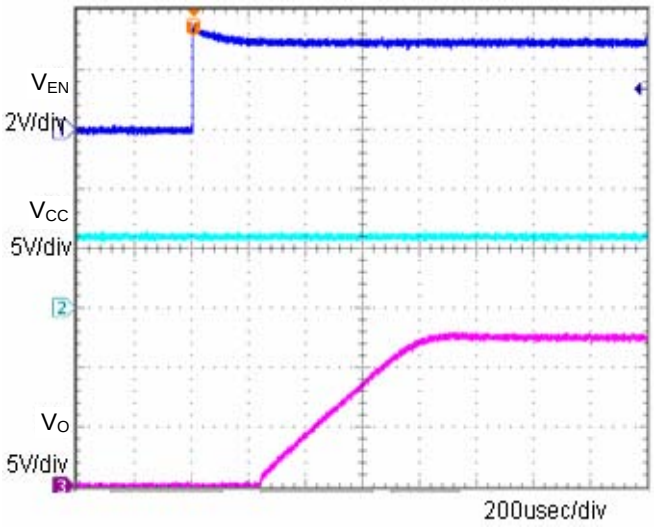

Fig.6
Input sequence 2
Co=1µF

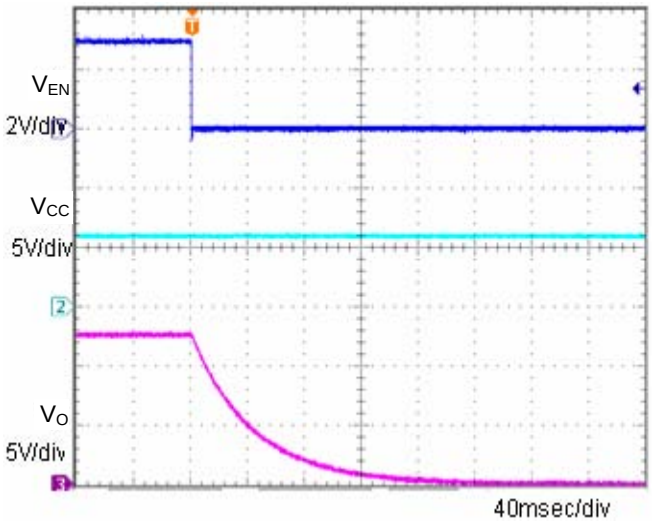

Fig.7
OFF sequence 2
Co=1µF

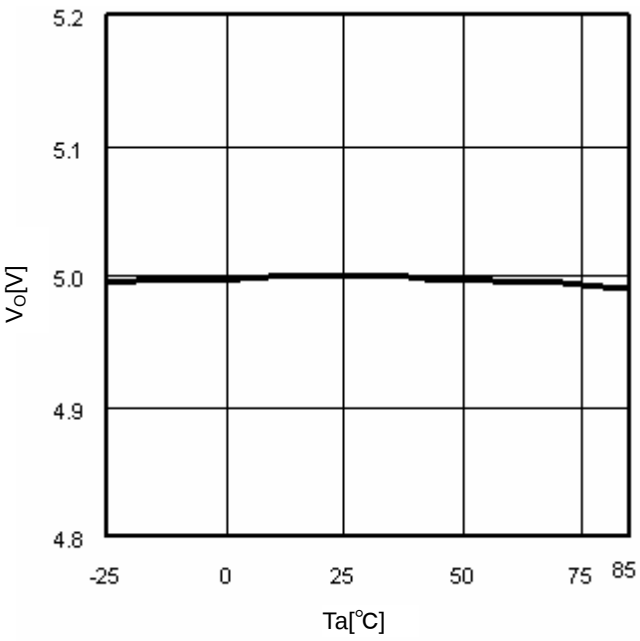

Fig.8
Ta-V_O (I_O=0mA)

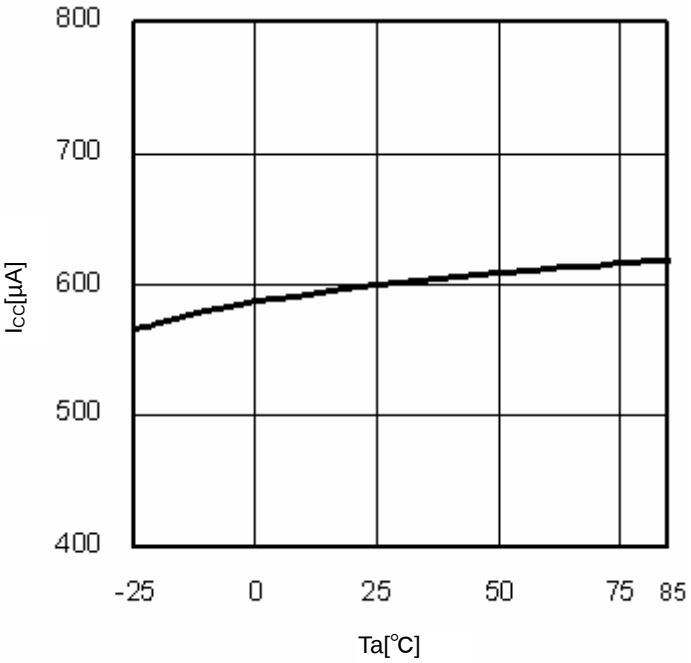

Fig.9
Ta-I_{CC}

© 2013 ROHM Co., Ltd. All rights reserved.

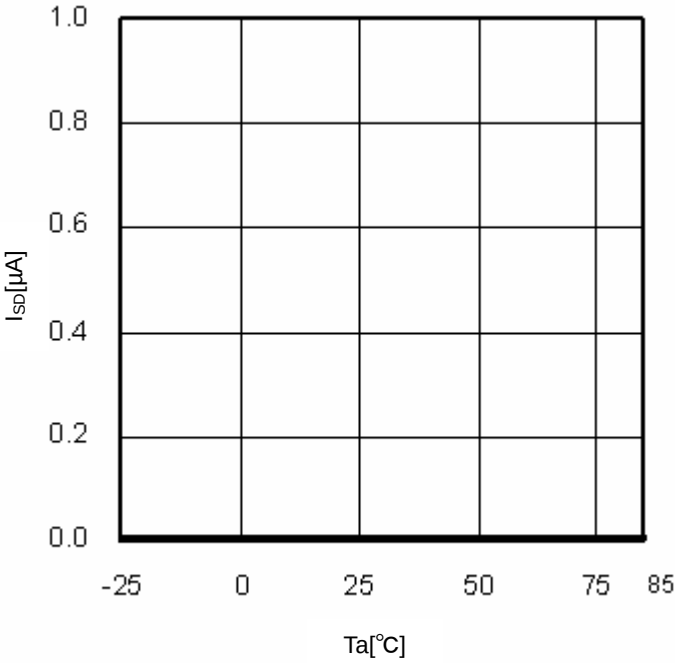

Fig.10
Ta-I_{SD}
(V_{EN}=0V)

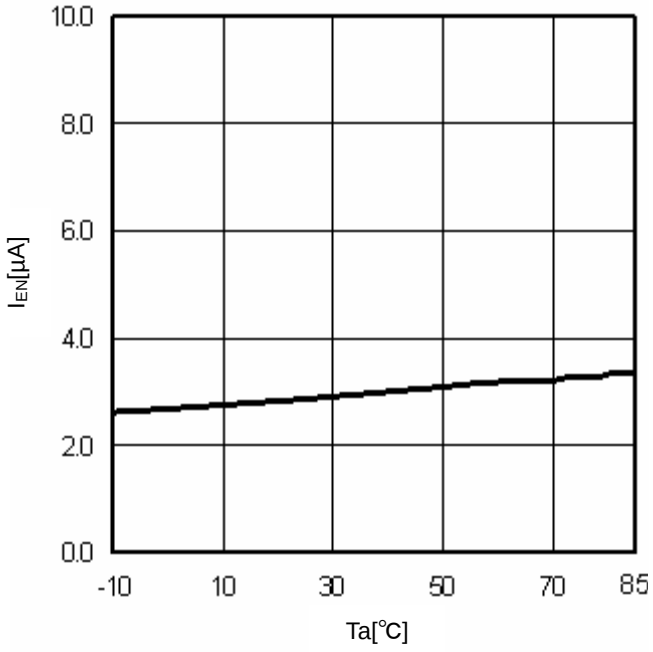

Fig.11
Ta-I_{EN}

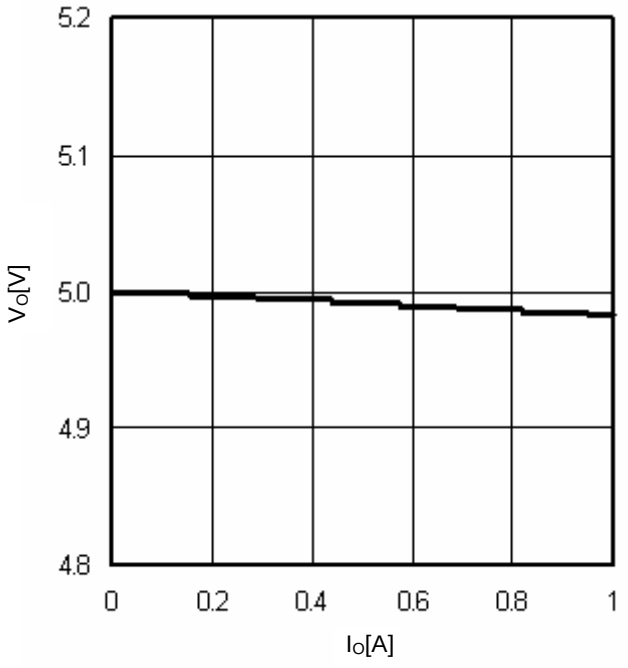

Fig.12
I_O-V_O

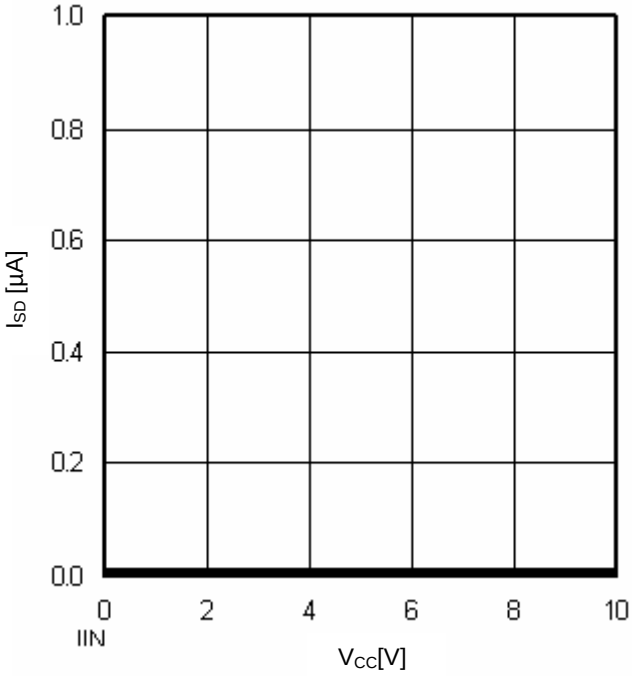

Fig.13
V_{CC}-II_{SD}
(V_{EN}=0V)

© 2013 ROHM Co., Ltd. All rights reserved.

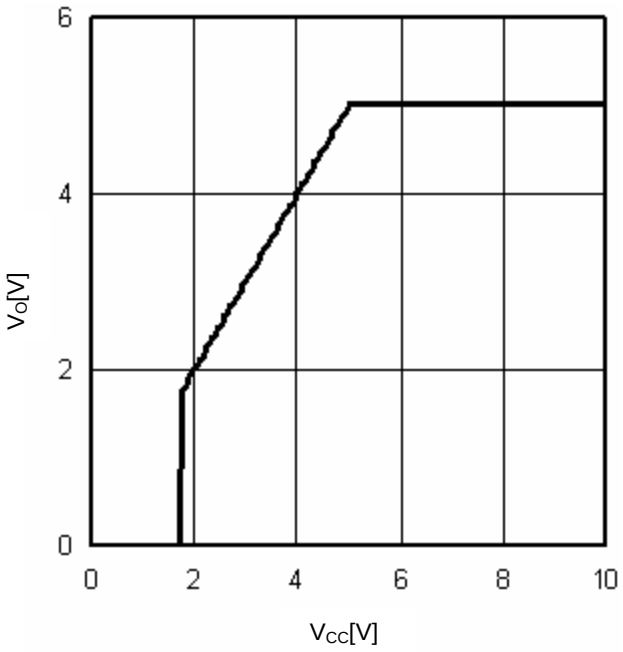

Fig.14
V_{CC}-V_O (I_O=0mA)

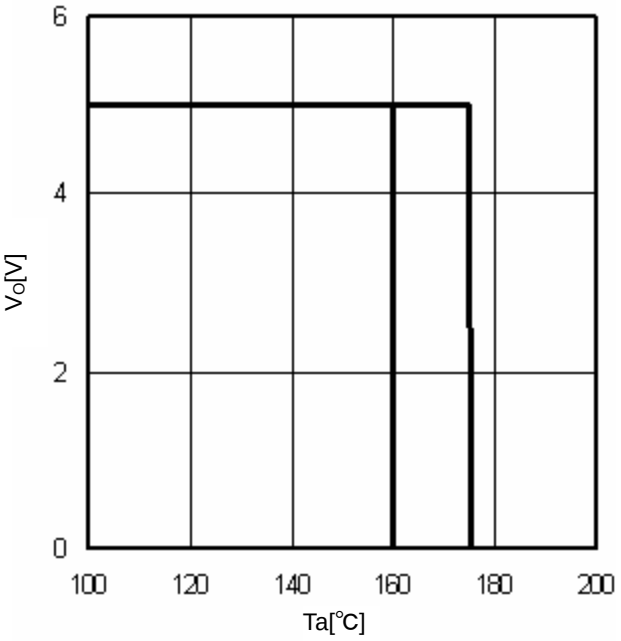

Fig.15
TSD (I_O=0mA)

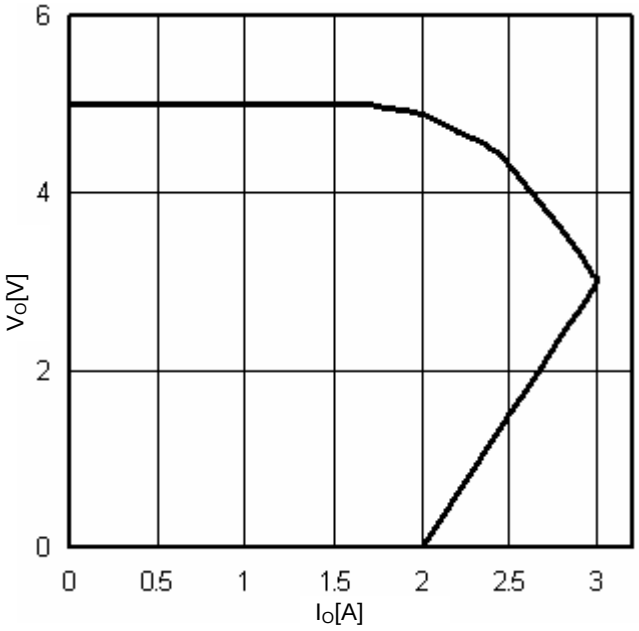

Fig.16
OCP

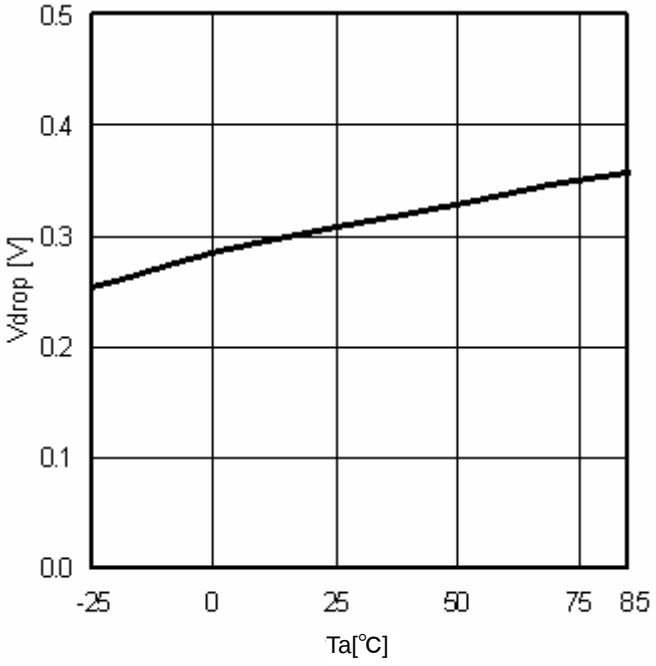

Fig.17
Minimum dropout Voltage
（V_{CC}=5V、I_O=-1A）

© 2013 ROHM Co., Ltd. All rights reserved.

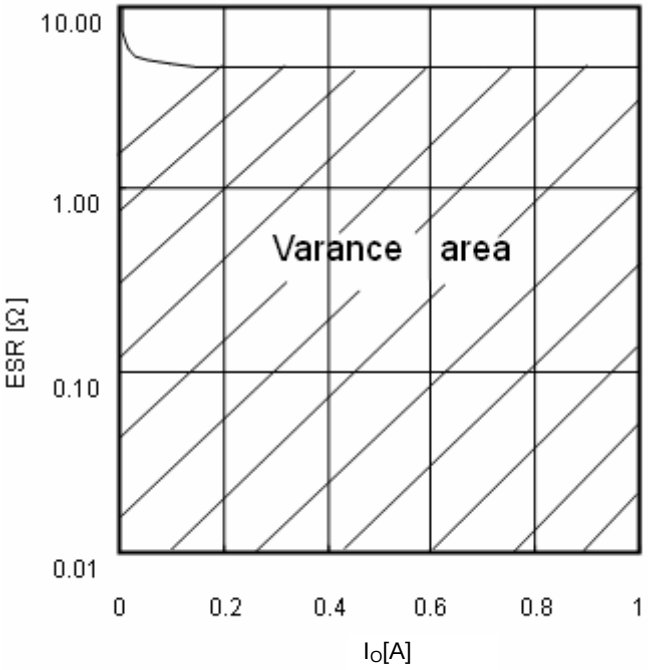

Fig.18
ESR condencer

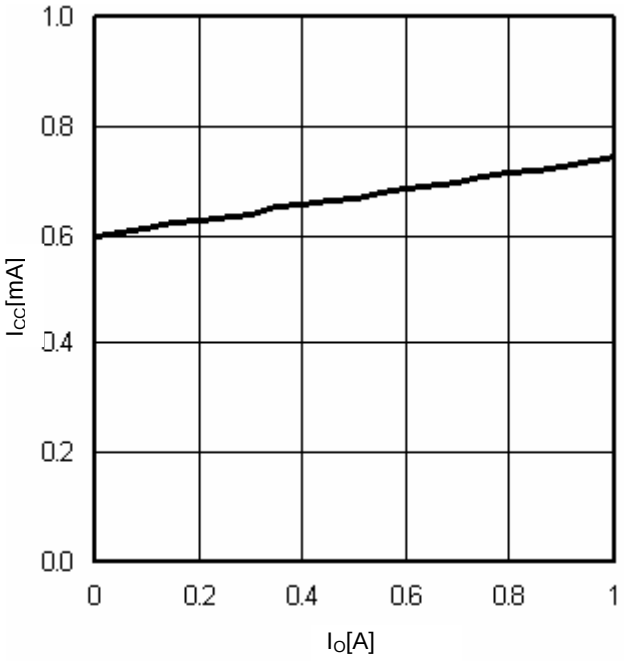

Fig.19
IO-ICC

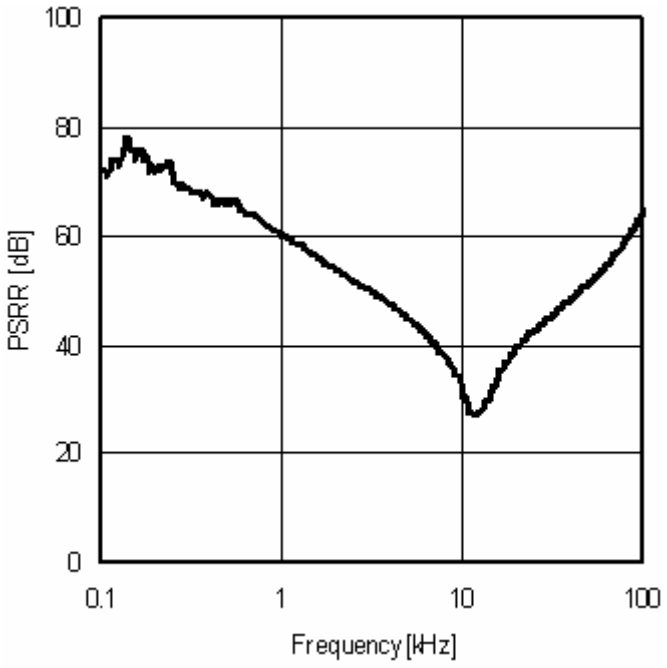

Fig.20
PSRR(I_O=0mA)

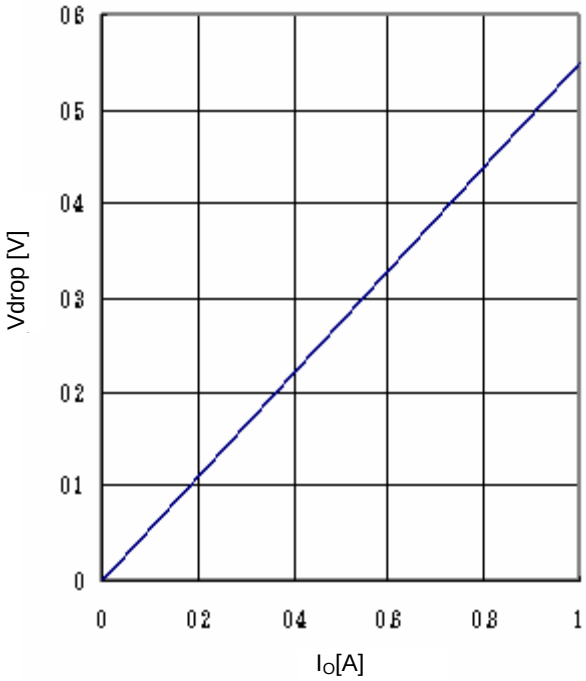

Fig.21
Minimum dropout Voltage 2
（V_{CC}=4.5V、Ta=25℃）

© 2013 ROHM Co., Ltd. All rights reserved.

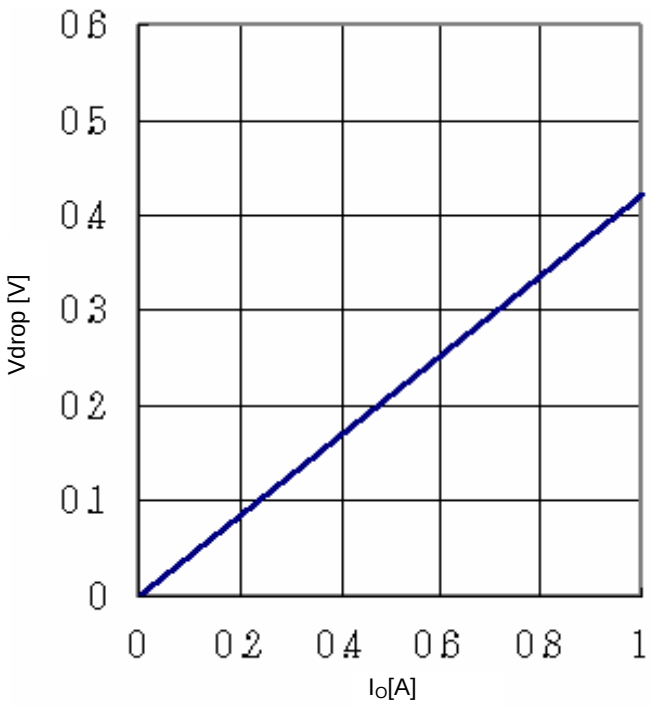

Fig.22
Minimum dropout Voltage 3
（V_{CC}=6V、Ta=25℃）

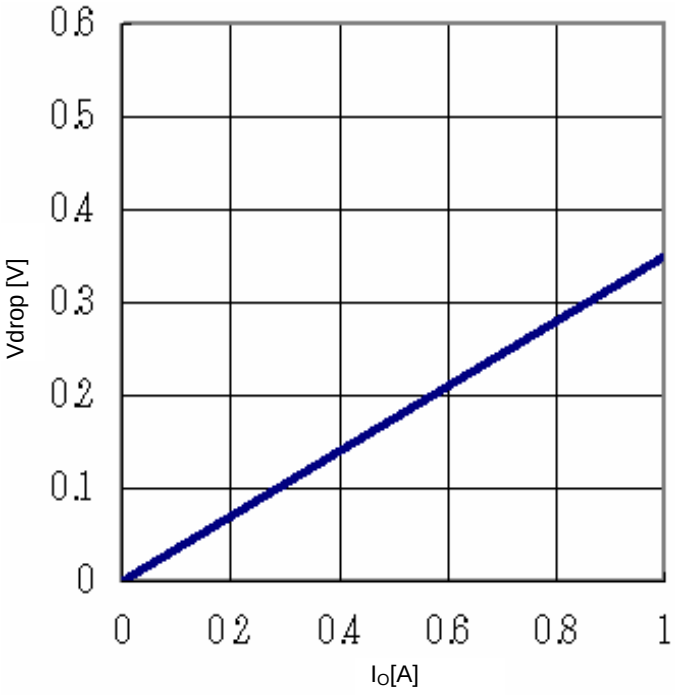

Fig.23
Minimum dropout Voltage 4
（V_{CC}=8V、Ta=25℃）

© 2013 ROHM Co., Ltd. All rights reserved.

●**Power Dissipation**

◎HTSOP-J8

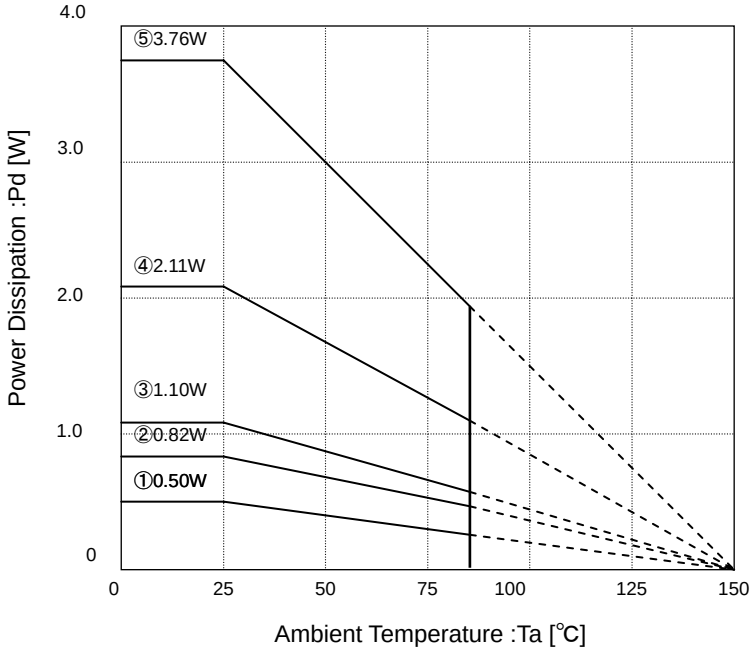

Measurement condition: mounted on a ROHM board,

Substrate size: 70mm × 70mm × 1.6mm
(Substrate with thermal via)
・Solder the thermal pad to Ground

① IC only
θj-a=249.5℃/W
② 1-layer（copper foil are :0mm × 0mm）
θj-a=153.2℃/W
③ 2-layer（copper foil are :15mm × 15mm）
θj-a=113.6℃/W
④ 2-layer（copper foil are :70mm × 70mm）
θj-a=59.2℃/W
⑤ 4-layer（copper foil are :70mm × 70mm）
θj-a=33.3℃/W

Thermal design should ensure operation within the following conditions. Note that the temperatures listed are the allowed temperature limits and thermal design should allow sufficient margin beyond these limits.

1. Ambient temperature Ta can be no higher than 85℃.
2. Chip junction temperature (Tj) can be no higher than 150℃.

Chip junction temperature can be determined as follows:

Calculation based on ambient temperature (Ta)
$Tj = Ta + \theta j\text{-}a \times W$

＜Reference values＞

θj-a:	HTSOP-J8	153.2℃/W	1-layer substrate (copper foil density 0mm × 0mm)
		113.6℃/W	2-layer substrate (copper foil density 15mm × 15mm)
		59.2℃/W	2-layer substrate (copper foil density 70mm × 70mm)
		33.3℃/W	4-layer substrate (copper foil density 70mm × 70mm)

Substrate size: 70mm × 70mm × 1.6mm (substrate with thermal via)

Most of the heat loss that occurs in the BD00HC0WEFJ is generated from the output Pch FET. Power loss is determined by the total V_{CC}-V_O voltage and output current. Be sure to confirm the system input and output voltage as well as the output current conditions in relation to the heat dissipation characteristics of the V_{CC} and V_O in the design. Bearing in mind that heat dissipation may vary substantially depending on the substrate employed (due to the power package incorporated in the BD00HC0WEFJ make certain to factor conditions such as substrate size into the thermal design.

$$\text{Power consumption [W]} = \left\{ \text{Input voltage } (V_{CC}) - \text{Output voltage } (V_O) \right\} \times I_O \text{ (Ave)}$$

Example) Where V_{CC}=5.0V, V_O=3.3V, I_O(Ave) = 0.5A,

$$\text{Power consumption [W]} = \left\{ 5.0\text{V} - 3.3\text{V} \right\} \times 0.5\text{A}$$

$$= 0.85\text{[W]}$$

© 2013 ROHM Co., Ltd. All rights reserved.

●Input-to-Output Capacitor

It is recommended that a capacitor (over 1uF) is placed near pins between the input pin and GND as well as the output pin and GND. A capacitor, between input pin and GND, is valid when the power supply impedance is high or trace is long. Also, as for the capacitor between the output pin and GND, the greater the capacitance, the more sustainable the line regulation will be and the capacitor will make improvements of characteristics depending on the load. However, please check the actual functionality of this part by mounting it on a board for the actual application. Ceramic capacitors usually have different, thermal and equivalent series resistance characteristics, and moreover capacitance decreases gradually in use.

For additional details, please check with the manufacturer, and select the best ceramic capacitor for your application.

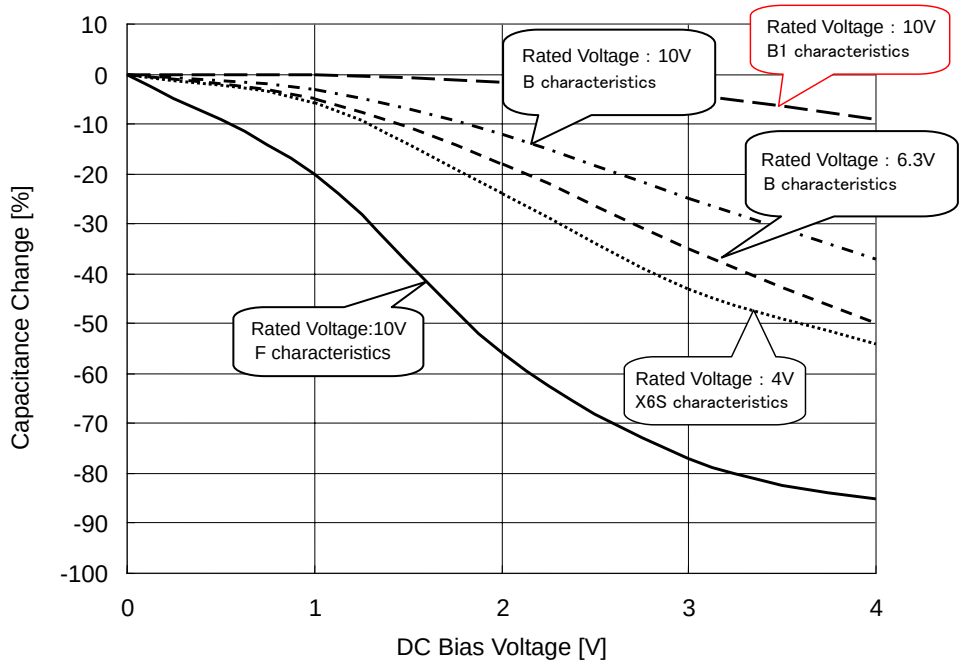

Ceramic capacitor capacity – DC bias characteristics
(Characteristics example)

●Equivalent Series Resistance ESR (Output capacitor)

To prevent oscillations, please attach a capacitor between V_O and GND. Capacitors usually have ESR (Equivalent Series Resistance). Operation will be stable in the ESR-I_O range shown to the right. Ceramic, tantalum and electrolytic Capacitors have different ESR values, so please ensure that you are using a capacitor that operates in the stable operating region shown on the right. Finally, please evaluate in the actual application.

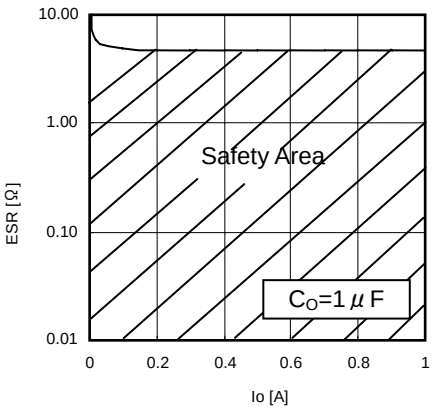

ESR – I_O characteristics

© 2013 ROHM Co., Ltd. All rights reserved.

●Evaluation Board Circuit

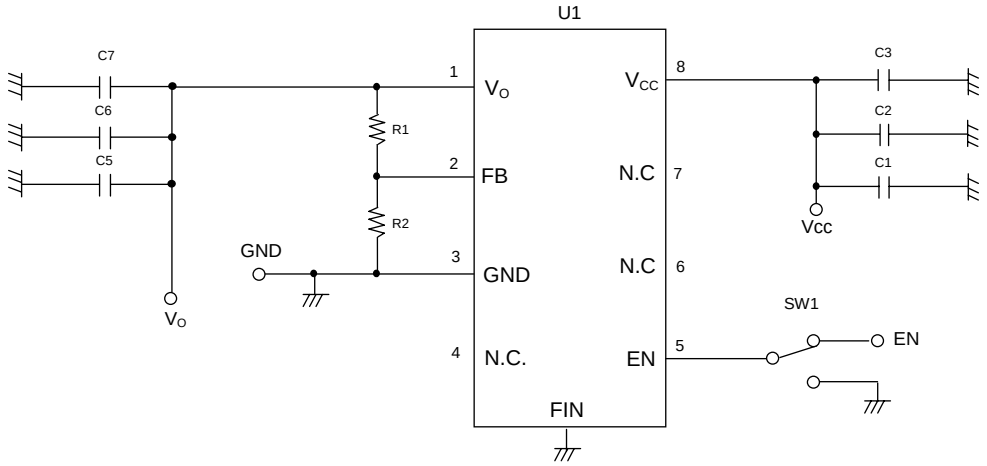

●Evaluation Board Parts List

Designation	Value	Part No.	Company	Designation	Value	Part No.	Company
R1	43kΩ	MCR01PZPZF4302	ROHM	C4	-	-	-
R2	8.2kΩ	MCR01PZPZF8201	ROHM	C5	1μF	CM105B105K16A	KYOCERA
R3	-	-	-	C6			
R4	-	-	-	C7	-	-	-
R5	-	-	-	C8	-	-	-
R6	-	-	-	C9	-	-	-
C1	1μF	CM105B105K16A	KYOCERA	C10	-	-	-
C2	-	-		U1	-	BD00HC0WEFJ	ROHM
C3	-	-		U2	-	-	-

●Board Layout

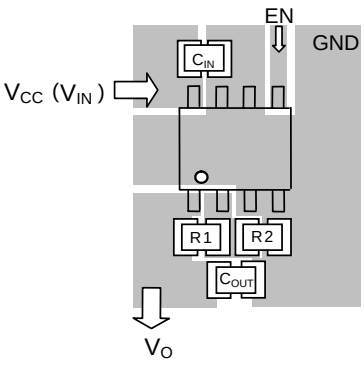

PCB layout considerations:

- Input capacitor C_{IN} connected to V_{CC} (Vin) should be placed as close to V_{CC}(V_{IN}) pin as possible.
  Output capacitor C_{OUT} also should be placed as close to IC pin as possible. In case the part is connected to inner layer GND plane, please use several through holes.
- FB pin has comparatively high impedance and can be affected by noise, so stray capacitance should be as small as possible. Please take care of this during layout.
- Please make GND pattern wide enough to handle thermal dissipation.
- For output voltage setting
  Output voltage can be set by FB pin voltage（0.800V typ.）and external resistance R1, R2.

$$V_O = V_{FB} \times \frac{R1+R2}{R2}$$

(The use of resistors with R1+R2=1k to 90k is recommended)

© 2013 ROHM Co., Ltd. All rights reserved.

●I/O Equivalent Circuits

8pin(V_{CC}) / 1pin(V_O)	2pin(FB)	5pin(EN)
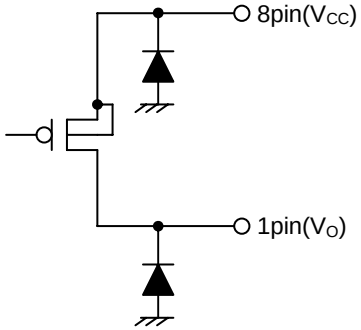	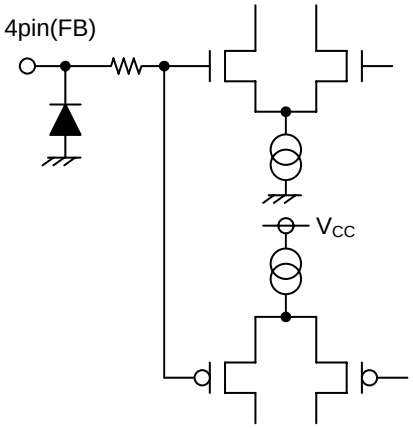	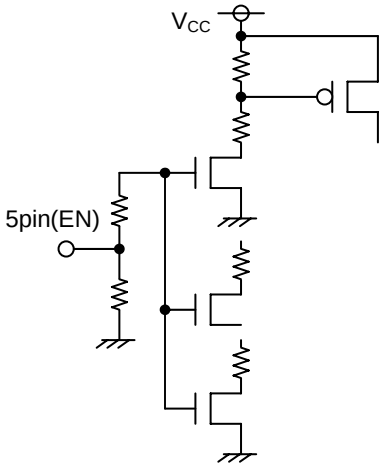

© 2013 ROHM Co., Ltd. All rights reserved.

●Operational Notes

(1) Absolute maximum ratings
An excess in the absolute maximum ratings, such as supply voltage, temperature range of operating conditions, etc., can break down the device, thus making it impossible to identify the damage mode, such as a short circuit or an open circuit. If there is any possibility of exposure over the rated values, please consider adding circuit protection devices such as fuses.

(2) Connecting the power supply connector backward
Connecting of the power supply in reverse polarity can damage the IC. Take precautions when connecting the power supply lines. An external direction diode can be added.

(3) Power supply lines
Design the PCB layout pattern to provide low impedance GND and supply lines. To obtain a low noise ground and supply line, separate the ground section and supply lines of the digital and analog blocks. Furthermore, for all power supply terminals to ICs, connect a capacitor between the power supply and GND terminal. When using electrolytic capacitors in a circuit, note that capacitance values are reduced at low temperatures and over time.

(4) GND voltage
The potential of the GND pin must be minimum potential under all operating conditions.

(5) Thermal design
Use a thermal design that allows for a sufficient margin in light of the power dissipation (Pd) in actual operating conditions.

(6). Inter-pin shorts and mounting errors
Use caution when positioning the IC for mounting on printed circuit boards. The IC may be damaged if there is any connection error or if pins are shorted together.

(7). Actions in strong electromagnetic field
Use caution when using the IC in the presence of a strong electromagnetic field as doing so may cause the IC to malfunction.

(8). ASO
When using the IC, set the output transistor so that it does not exceed absolute maximum ratings or ASO.

(9). Thermal shutdown circuit
The IC incorporates a built-in thermal shutdown circuit (TSD circuit). The thermal shutdown circuit (TSD circuit) is designed only to shut the IC off to prevent thermal runaway. It is not designed to protect the IC or guarantee its operation. Do not continue to use the IC after operating this circuit or use the IC in an environment where the operation of this circuit is assumed.

	TSD ON Temperature[℃] (typ.)	Hysteresis Temperature [℃] (typ.)
BD00HC0WEFJ	175	15

(10). Testing on application boards
When testing the IC on an application board, connecting a capacitor to a pin with low impedance subjects the IC to stress. Always discharge capacitors after each process or step. Always turn the IC's power supply off before connecting it to or removing it from a jig or fixture during the inspection process. Ground the IC during assembly steps as an antistatic measure. Use similar precaution when transporting or storing the IC.

© 2013 ROHM Co., Ltd. All rights reserved.

(11). Regarding input pin of the IC

This monolithic IC contains P+ isolation and P substrate layers between adjacent elements in order to keep them isolated.

P-N junctions are formed at the intersection of these P layers with the N layers of other elements, creating a parasitic diode or transistor. For example, the relation between each potential is as follows:

When GND > Pin A and GND > Pin B, the P-N junction operates as a parasitic diode.

When GND > Pin B, the P-N junction operates as a parasitic transistor.

Parasitic diodes can occur inevitable in the structure of the IC.

The operation of parasitic diodes can result in mutual interference among circuits, operational faults, or physical damage. Accordingly, methods by which parasitic diodes operate, such as applying a voltage that is lower than the GND (P substrate) voltage to an input pin, should not be used.

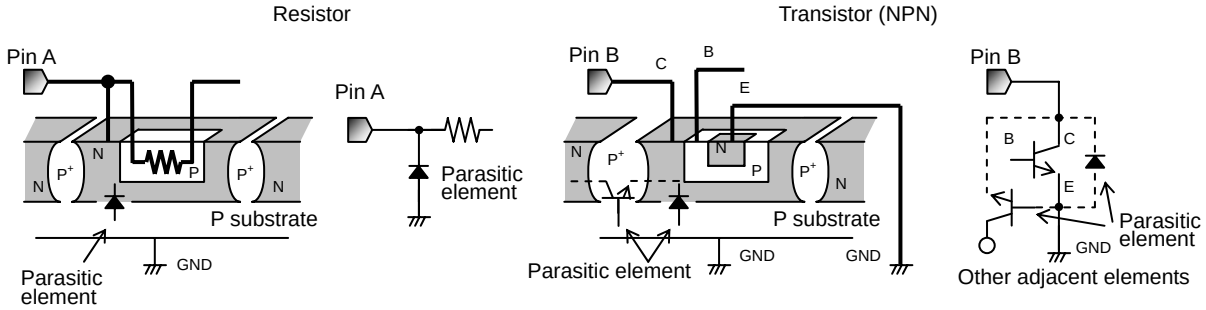

(12). Ground Wiring Pattern.

When using both small signal and large current GND patterns, it is recommended to isolate the two ground patterns, placing a single ground point at the ground potential of application so that the pattern wiring resistance and voltage variations caused by large currents do not cause variations in the small signal ground voltage. Be careful not to change the GND wiring pattern of any external components, either.

© 2013 ROHM Co., Ltd. All rights reserved.

●Physical Dimension Tape and Reel Information

HTSOP-J8

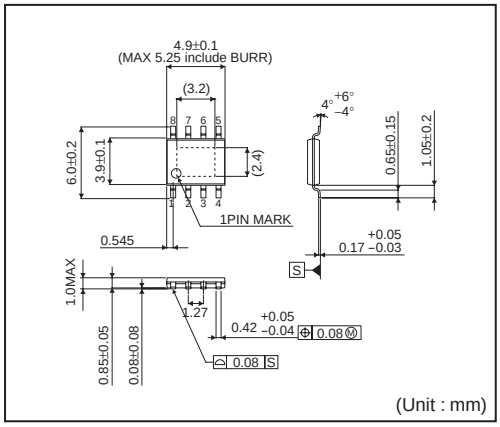

<Tape and Reel information>

Tape	Embossed carrier tape
Quantity	2500pcs
Direction of feed	E2 (The direction is the 1pin of product is at the upper left when you hold reel on the left hand and you pull out the tape on the right hand)

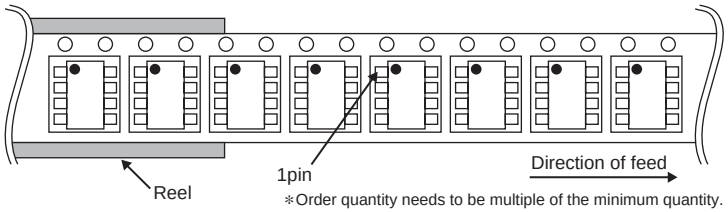

∗Order quantity needs to be multiple of the minimum quantity.

●Marking Diagram

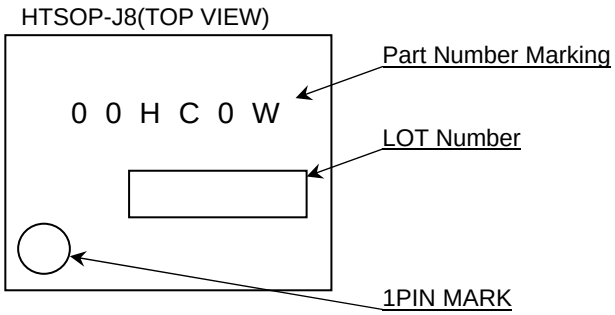

© 2013 ROHM Co., Ltd. All rights reserved.

●**Revision History**

Date	Revision	Changes
28.May.2012	001	New Release
17.Jan.2013	002	The description was modified.

© 2013 ROHM Co., Ltd. All rights reserved.

Notice

Precaution on using ROHM Products

1. Our Products are designed and manufactured for application in ordinary electronic equipments (such as AV equipment, OA equipment, telecommunication equipment, home electronic appliances, amusement equipment, etc.). If you intend to use our Products in devices requiring extremely high reliability (such as medical equipment (Note 1), transport equipment, traffic equipment, aircraft/spacecraft, nuclear power controllers, fuel controllers, car equipment including car accessories, safety devices, etc.) and whose malfunction or failure may cause loss of human life, bodily injury or serious damage to property ("Specific Applications"), please consult with the ROHM sales representative in advance. Unless otherwise agreed in writing by ROHM in advance, ROHM shall not be in any way responsible or liable for any damages, expenses or losses incurred by you or third parties arising from the use of any ROHM's Products for Specific Applications.

(Note1) Medical Equipment Classification of the Specific Applications

JAPAN	USA	EU	CHINA
CLASSⅢ	CLASSⅢ	CLASSⅡb	CLASSⅢ
CLASSⅣ		CLASSⅢ	

2. ROHM designs and manufactures its Products subject to strict quality control system. However, semiconductor products can fail or malfunction at a certain rate. Please be sure to implement, at your own responsibilities, adequate safety measures including but not limited to fail-safe design against the physical injury, damage to any property, which a failure or malfunction of our Products may cause. The following are examples of safety measures:
   [a] Installation of protection circuits or other protective devices to improve system safety
   [b] Installation of redundant circuits to reduce the impact of single or multiple circuit failure

3. Our Products are designed and manufactured for use under standard conditions and not under any special or extraordinary environments or conditions, as exemplified below. Accordingly, ROHM shall not be in any way responsible or liable for any damages, expenses or losses arising from the use of any ROHM's Products under any special or extraordinary environments or conditions. If you intend to use our Products under any special or extraordinary environments or conditions (as exemplified below), your independent verification and confirmation of product performance, reliability, etc, prior to use, must be necessary:
   [a] Use of our Products in any types of liquid, including water, oils, chemicals, and organic solvents
   [b] Use of our Products outdoors or in places where the Products are exposed to direct sunlight or dust
   [c] Use of our Products in places where the Products are exposed to sea wind or corrosive gases, including Cl_2, H_2S, NH_3, SO_2, and NO_2
   [d] Use of our Products in places where the Products are exposed to static electricity or electromagnetic waves
   [e] Use of our Products in proximity to heat-producing components, plastic cords, or other flammable items
   [f] Sealing or coating our Products with resin or other coating materials
   [g] Use of our Products without cleaning residue of flux (even if you use no-clean type fluxes, cleaning residue of flux is recommended); or Washing our Products by using water or water-soluble cleaning agents for cleaning residue after soldering
   [h] Use of the Products in places subject to dew condensation

4. The Products are not subject to radiation-proof design.

5. Please verify and confirm characteristics of the final or mounted products in using the Products.

6. In particular, if a transient load (a large amount of load applied in a short period of time, such as pulse. is applied, confirmation of performance characteristics after on-board mounting is strongly recommended. Avoid applying power exceeding normal rated power; exceeding the power rating under steady-state loading condition may negatively affect product performance and reliability.

7. De-rate Power Dissipation (Pd) depending on Ambient temperature (Ta). When used in sealed area, confirm the actual ambient temperature.

8. Confirm that operation temperature is within the specified range described in the product specification.

9. ROHM shall not be in any way responsible or liable for failure induced under deviant condition from what is defined in this document.

Precaution for Mounting / Circuit board design

1. When a highly active halogenous (chlorine, bromine, etc.) flux is used, the residue of flux may negatively affect product performance and reliability.

2. In principle, the reflow soldering method must be used; if flow soldering method is preferred, please consult with the ROHM representative in advance.

For details, please refer to ROHM Mounting specification

© 2014 ROHM Co., Ltd. All rights reserved.

Precautions Regarding Application Examples and External Circuits

1. If change is made to the constant of an external circuit, please allow a sufficient margin considering variations of the characteristics of the Products and external components, including transient characteristics, as well as static characteristics.

2. You agree that application notes, reference designs, and associated data and information contained in this document are presented only as guidance for Products use. Therefore, in case you use such information, you are solely responsible for it and you must exercise your own independent verification and judgment in the use of such information contained in this document. ROHM shall not be in any way responsible or liable for any damages, expenses or losses incurred by you or third parties arising from the use of such information.

Precaution for Electrostatic

This Product is electrostatic sensitive product, which may be damaged due to electrostatic discharge. Please take proper caution in your manufacturing process and storage so that voltage exceeding the Products maximum rating will not be applied to Products. Please take special care under dry condition (e.g. Grounding of human body / equipment / solder iron, isolation from charged objects, setting of Ionizer, friction prevention and temperature / humidity control).

Precaution for Storage / Transportation

1. Product performance and soldered connections may deteriorate if the Products are stored in the places where:
   [a] the Products are exposed to sea winds or corrosive gases, including Cl2, H2S, NH3, SO2, and NO2
   [b] the temperature or humidity exceeds those recommended by ROHM
   [c] the Products are exposed to direct sunshine or condensation
   [d] the Products are exposed to high Electrostatic

2. Even under ROHM recommended storage condition, solderability of products out of recommended storage time period may be degraded. It is strongly recommended to confirm solderability before using Products of which storage time is exceeding the recommended storage time period.

3. Store / transport cartons in the correct direction, which is indicated on a carton with a symbol. Otherwise bent leads may occur due to excessive stress applied when dropping of a carton.

4. Use Products within the specified time after opening a humidity barrier bag. Baking is required before using Products of which storage time is exceeding the recommended storage time period.

Precaution for Product Label

QR code printed on ROHM Products label is for ROHM's internal use only.

Precaution for Disposition

When disposing Products please dispose them properly using an authorized industry waste company.

Precaution for Foreign Exchange and Foreign Trade act

Since our Products might fall under controlled goods prescribed by the applicable foreign exchange and foreign trade act, please consult with ROHM representative in case of export.

Precaution Regarding Intellectual Property Rights

1. All information and data including but not limited to application example contained in this document is for reference only. ROHM does not warrant that foregoing information or data will not infringe any intellectual property rights or any other rights of any third party regarding such information or data. ROHM shall not be in any way responsible or liable for infringement of any intellectual property rights or other damages arising from use of such information or data.:

2. No license, expressly or implied, is granted hereby under any intellectual property rights or other rights of ROHM or any third parties with respect to the information contained in this document.

Other Precaution

1. This document may not be reprinted or reproduced, in whole or in part, without prior written consent of ROHM.

2. The Products may not be disassembled, converted, modified, reproduced or otherwise changed without prior written consent of ROHM.

3. In no event shall you use in any way whatsoever the Products and the related technical information contained in the Products or this document for any military purposes, including but not limited to, the development of mass-destruction weapons.

4. The proper names of companies or products described in this document are trademarks or registered trademarks of ROHM, its affiliated companies or third parties.

© 2014 ROHM Co., Ltd. All rights reserved.

General Precaution

1. Before you use our Products, you are requested to carefully read this document and fully understand its contents. ROHM shall not be in any way responsible or liable for failure, malfunction or accident arising from the use of any ROHM's Products against warning, caution or note contained in this document.

2. All information contained in this document is current as of the issuing date and subject to change without any prior notice. Before purchasing or using ROHM's Products, please confirm the latest information with a ROHM sales representative.

3. The information contained in this document is provided on an "as is" basis and ROHM does not warrant that all information contained in this document is accurate and/or error-free. ROHM shall not be in any way responsible or liable for any damages, expenses or losses incurred by you or third parties resulting from inaccuracy or errors of or concerning such information.

© 2014 ROHM Co., Ltd. All rights reserved.

BD00HC0WEFJ - Web Page

Buy

Distribution Inventory

Part Number	BD00HC0WEFJ
Package	HTSOP-J8
Unit Quantity	2500
Minimum Package Quantity	2500
Packing Type	Taping
Constitution Materials List	inquiry
RoHS	Yes