ELGD-BS-...-WD
Ball screw axis

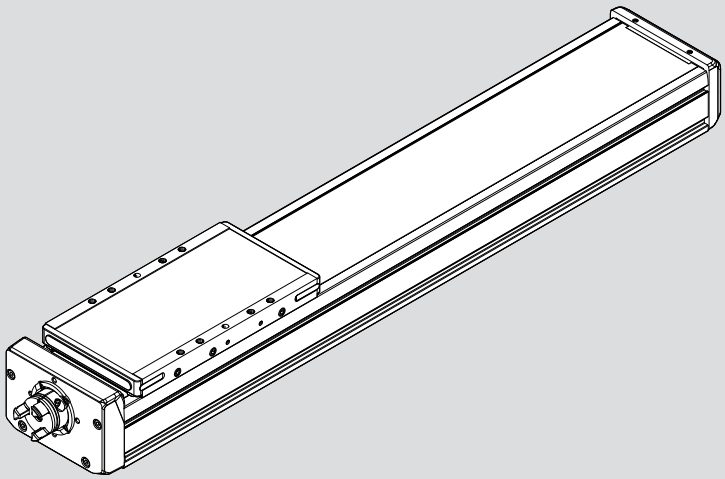

FESTO

Operating instructions

8262339

8262339
2026-06c
[8262341]

Table of contents

1 Applicable documents . . . 5

2 Safety . . . 5
2.1 Safety instructions . . . 5
2.2 Intended use . . . 5
2.3 Training of qualified personnel . . . 5

3 Additional information . . . 5

4 Product overview . . . 6
4.1 Product design . . . 6
4.2 Function . . . 6

5 Transport . . . 6

6 Mounting . . . 7
6.1 Safety . . . 7
6.2 Mounting motor . . . 7
6.3 Mounting axis . . . 8
6.4 Mounting payload on the standard slide . . . 9
6.5 Mounting payload on the additional slide . . . 10
6.6 Mounting payload on the profile . . . 11
6.7 Mounting sensor . . . 12
6.8 Connecting sealing air . . . 12

7 Commissioning . . . 13

8 Maintenance . . . 14
8.1 Safety . . . 14
8.2 Check reversing backlash . . . 15
8.3 Adjusting cover strip . . . 15
8.4 Cleaning axis . . . 17
8.5 Lubricating axis . . . 17

9 Fault clearance . . . 19

10 Technical data . . . 20
10.1 Technical data, mechanical . . . 20
10.2 Characteristic curves of support distances . . . 22
10.3 Characteristic speed curves . . . 23

1 Applicable documents

All available documents for the product ➔ www.festo.com/sp.

2 Safety

2.1 Safety instructions

- Observe the identifications on the product.
- Only use the product if it is in perfect technical condition.
- Before working on the product: Switch off the power supply, ensure that it is off and secure it against being switched on again.
- Store the product in a cool, dry environment protected from UV and corrosion. Keep storage times short.
- Store the product in ambient conditions without oils, greases and grease-dissolving vapours.

2.2 Intended use

The axis positions payloads or moves external guides.
The axis is approved for cantilever operation and slide operation.

Cantilever operation	Slide operation
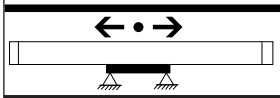	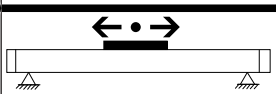

Tab. 1: Modes of Operations

2.3 Training of qualified personnel

Work on the product may only be carried out by qualified personnel who can evaluate the work and detect dangers. The qualified personnel must be trained and experienced in handling electric drives and axes.

3 Additional information

- For technical issues, contact the regional Festo representative ➔ www.festo.com/contact.
- Accessories and spare parts ➔ www.festo.com/catalogue.

4 Product overview

4.1 Product design

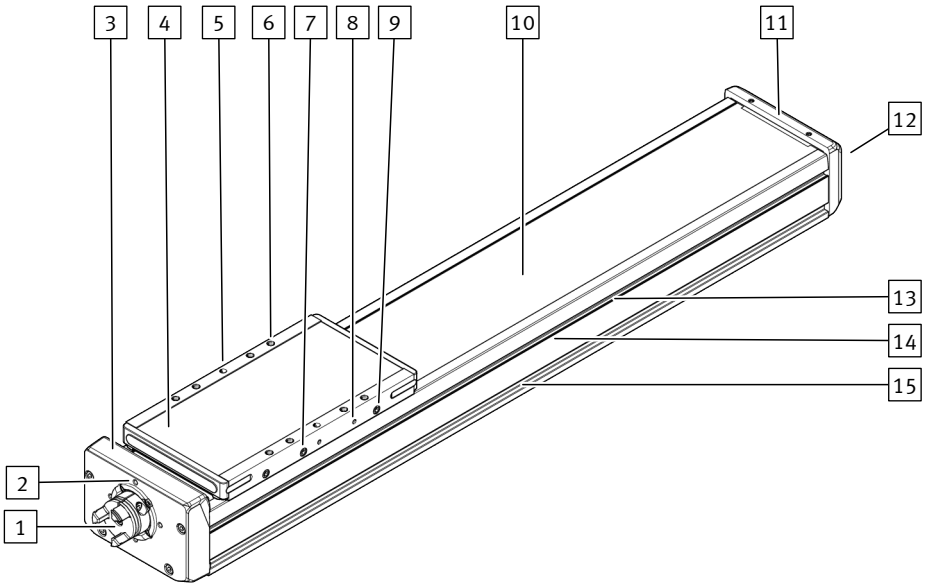

Fig. 1: Product design ELGD-BS-KF-WD

1 Drive shaft
2 Threaded hole for motor mounting kit
3 Drive cover
4 Slide
5 Centring hole for payload
6 Threaded hole for payload
7 Drive screw lubrication point, closed with threaded pin or with lubrication nipple
8 Threaded hole for switch lug
9 Guide lubrication point, closed with threaded pin or with lubrication nipple
10 Cover strip
11 End cap
12 Sealing air connection
13 Slot for sensor and sensor bracket
14 Profile
15 Slot for profile mounting

4.2 Function

The axis converts the rotary motion of the mounted motor to a linear motion of the slide. The drive screw converts the torque of the motor into a feed force. The linear motion of the slide is precisely guided by the guide. The integrated cover strip reduces the release of abraded particles in the immediate vicinity of the drive. Sensors monitor end positions, reference position and intermediate position.

5 Transport

⚠ WARNING

Risk of injury due to falling product
If the product is lifted incorrectly, it may fall and cut, crush or separate body parts.
- Lift the product only with suitable load-bearing equipment.

- Store and transport the product in its original packaging. Observe the weight, the dimensions and the ambient conditions.
- Take the centre of gravity of the product into consideration.
- Store and transport the product in a horizontal position.
- Comply with the maximum permitted support clearances when attaching transportation aids ➔ 10.2 Characteristic curves of support distances. Compliance with the support clearances prevents the axis from excessive bending.

6 Mounting

6.1 Safety

⚠ WARNING

Risk of Injury due to Unexpected Movement of Components
For vertical or slanted mounting position: when power is off, moving parts can travel or fall uncontrolled into the lower end position.
- Bring moving parts of the product into a safe end position or secure them against falling.

Protection of the cover strip
The protective cover protects the cover strip from damage during transport, handling and assembly. Do not remove the protective cover until the axis has been fully assembled and it is ready for commissioning. After removing the protective cover, protect the cover strip from mechanical damage and contamination.

6.2 Mounting motor

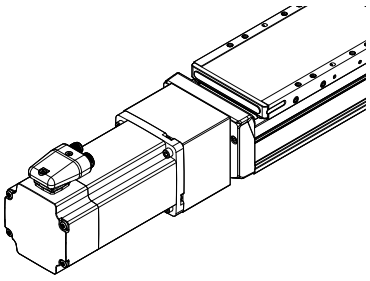

Fig. 2: Mounting motor, axial kit example

Observe the limit values for forces, torques and speeds if a non-recommended motor and motor mounting kit are used.

- Mount the motor and the motor mounting kit on the drive cover with drive shaft without tension.

6.3 Mounting axis

Profile mounting EAHF	Direct fastening, only ELGD-BS-KF-WD-...-M
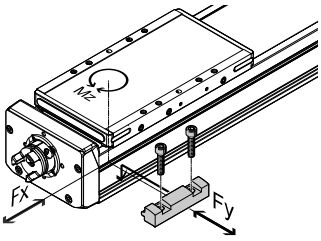	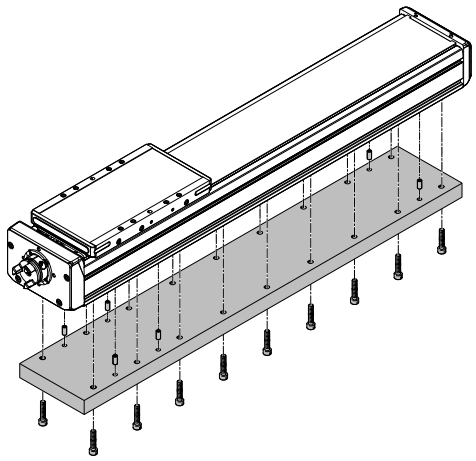

Tab. 2: Overview of mounting components

Requirements:
- Adequate clearance for payload movement to avoid collisions with motor, mounting components and sensor components.
- Sufficient space for maintenance work.
- The flatness of the mounting surface or several mounting surfaces relative to one another of 0.05% of the stroke length or a maximum of 0.5 mm above the support surface.
- Required support points lie within the specified support clearances ➔ 10.2 Characteristic curves of support distances. Compliance with the support clearances prevents the axis from excessive bending.
- At least two profile mountings per side are used for single or combined displacement forces Fx and Fy ≥ 2500 N. At least two profile mountings per side are recommended for smaller displacement forces.
- Centre the ELGD-BS-KF-WD-...-M axis with a centring hole and a slotted hole. This ensures positive force transmission Fy and torque transmission Mz.

1. With ELGD-BS-KF-WD-...-M place the centering components in the centering holes.
2. Place the mounting components on the support points.

3. Tighten the screws crosswise. Observe the maximum tightening torque and maximum screw-in depth.

For use in multi-axis systems
- ELGD-BS-KF-WD: align the attached guide axis and install it without tension.
- ELGD-BS-KF-WD-...-M: do not use in multi-axis systems.

ELGD-BS-KF-WD		-100	-120
Profile mounting EAHF			
Assembly instructions ➔ www.festo.com/sp.			
Direct fastening, only ELGD-BS-KF-WD-...-M			
Thread		M5	M6
Max. tightening torque	[Nm]	5	8
Max. screw-in depth	[mm]	10.5	12.5
Centring pin	[mm]	∅ 6 H7	∅ 6 H7

6.4 Mounting payload on the standard slide

⚠ WARNING

Unexpected movement of components.
Injury due to impacts or crushing.
- Before working on the product, switch off the control and secure it to prevent it from being switched back on accidentally.

⚠ WARNING

Risk of Injury due to Unexpected Movement of Components
For vertical or slanted mounting position: when power is off, moving parts can travel or fall uncontrolled into the lower end position.
- Bring moving parts of the product into a safe end position or secure them against falling.

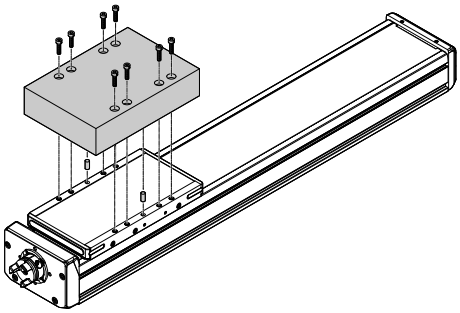

Fig. 3: Mounting payload

Requirements:
- Adequate clearance for payload movement to avoid collisions with motor, mounting components and sensor components.
- Sufficient space for maintenance work.
- A payload mounting surface flatness of 0.01 mm above the slide surface.
- Do not exceed the permissible guide load during assembly.

1. Place centring components in the centring holes.
2. Position the payload at the specified location.

3. Tighten the screws. Observe the maximum tightening torque and maximum screw-in depth.

ELGD-BS-KF-WD		-100	-120
Direct fastening			
Thread		M5	M6
Max. tightening torque	[Nm]	5	8
Max. screw-in depth t_{max}	[mm]	16.5	17.5
Centring pin	[mm]	∅ 5 H7	∅ 6 H7

6.5 Mounting payload on the additional slide

⚠ WARNING

Unexpected movement of components.
Injury due to impacts or crushing.
- Before working on the product, switch off the control and secure it to prevent it from being switched back on accidentally.

⚠ WARNING

Risk of Injury due to Unexpected Movement of Components
For vertical or slanted mounting position: when power is off, moving parts can travel or fall uncontrolled into the lower end position.
- Bring moving parts of the product into a safe end position or secure them against falling.

- When using an additional external guide, ensure that the axes and guide are precisely parallel and aligned.
- Recommendation: use guide mountings with tolerance compensation.

Tension due to manufacturing tolerances may be encountered with axes with additional slides when mounting an adapter plate supplied by the customer.

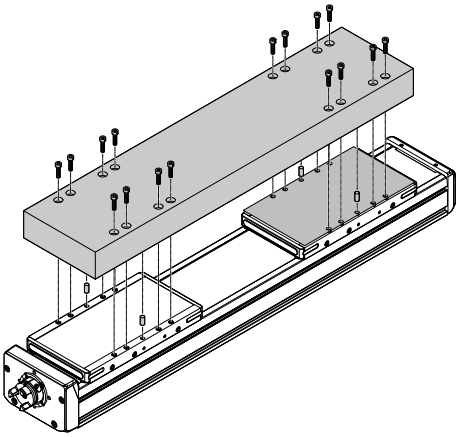

Fig. 4: Mounting payload

Requirements:
- Apply a tolerance compensation in case of height deviation from the standard slide surface.
- Adequate clearance for payload movement to avoid collisions with motor, mounting components and sensor components.
- Sufficient space for maintenance work.
- A payload mounting surface flatness of 0.01 mm above the slide surfaces.

- Do not exceed the permissible guide load during assembly.
- The distance between the two slides is ≥ 50 mm.

1. Place centring components in the centring holes.
2. Mount the adapter plate on the standard slide.
3. Place the tolerance compensation elements on the additional slide.
4. Align and mount the adapter plate on the additional slide.
5. Tighten the screws. Observe the maximum tightening torque and maximum screw-in depth.

ELGD-BS-KF-WD		-100	-120
Direct fastening			
Thread		M5	M6
Max. tightening torque	[Nm]	5	8
Max. screw-in depth t_{max}	[mm]	16.5	17.5
Centring pin	[mm]	∅ 5 H7	∅ 6 H7

6. Check the running behaviour of the slides.

6.6 Mounting payload on the profile

⚠ WARNING

Unexpected movement of components.
Injury due to impacts or crushing.
- Before working on the product, switch off the control and secure it to prevent it from being switched back on accidentally.

⚠ WARNING

Risk of Injury due to Unexpected Movement of Components
For vertical or slanted mounting position: when power is off, moving parts can travel or fall uncontrolled into the lower end position.
- Bring moving parts of the product into a safe end position or secure them against falling.

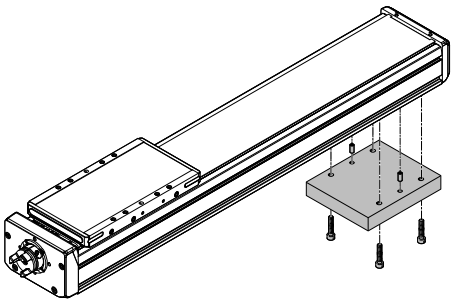

Fig. 5: Mounting payload

Requirements:
- Adequate clearance for payload movement to avoid collisions with motor, mounting components and sensor components.
- Sufficient space for maintenance work.

- A flatness of the mounting surface of the payload of 0.01 mm across the profile surface.
- Do not exceed the permissible guide load during assembly.

1. Place centring components in the centring holes.
2. Position the payload at the specified location.
3. Tighten the screws. Observe the maximum tightening torque and maximum screw-in depth.

ELGD-BS-KF-WD		**-100**
Direct fastening, only ELGD-BS-KF-WD-...-M		
Thread		M5
Max. tightening torque	[Nm]	5
Max. screw-in depth	[mm]	10.5
Centring pin	[mm]	∅ 6 H7

6.7 Mounting sensor

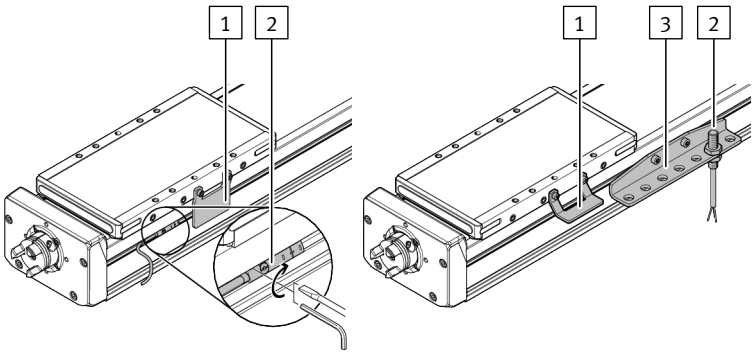

Fig. 6: Mounting switch lug, sensor and sensor bracket

1 Switch lug
2 Sensor
3 Sensor bracket

Requirements:
- Only attach sensors and sensor brackets to the slot.
- Protect the sensor from external magnetic or ferritic influences with min. 10 mm distance from slot nuts.
- Only limit switches with a normally closed function offer protection in the event of sensor failure.
- Only query the switch lug with an inductive sensor.

1. Mount the switch lug.
2. If necessary, mount the sensor bracket.
3. Mount the sensor.
4. If necessary, fasten the cable with clips.
5. If necessary, mount the slot cover.

6.8 Connecting sealing air

The use of sealing air reduces or prevents the following contamination:
- The application of negative pressure –0.02 MPa (–0.2 bar, –2.9 psi) minimises the release of abraded particles into the environment.
- The application of overpressure 0.02 MPa (0.2 bar, 2.9 psi) reduces the penetration of dirt into the drive train.
  - Use a flow rate of 30 … 50 l/min in a dusty environment.
  - Use a flow rate of 10 l/min for gas.

ELGD-BS-WD

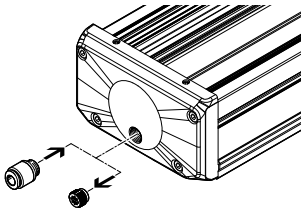

Fig. 7: Connecting sealing air

1. Remove the sealing plug from the sealing air opening.
2. Install the fittings.

ELGD-BS-WD-...-M7

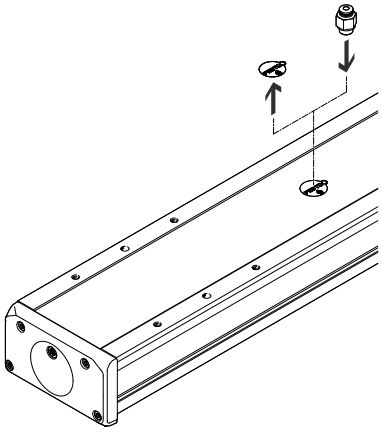

Fig. 8: Connecting sealing air

1. Remove the sticker from the sealing air opening.
2. Install the fittings.

7 Commissioning

⚠ WARNING

Risk of injury due to unexpected movement of components.

- Protect the positioning range from unwanted access.
- Keep foreign objects out of the positioning range.
- Perform commissioning with low dynamic response.

Block-shaped acceleration profiles without jerk limitation can have the following effects:

- High mechanical loads on the drive due resulting from high force peaks.
- Overshooting effects during positioning.
- Rise of the entire system.

Recommendation: reduce high force peaks in the acceleration and deceleration phases by using the jerk limitation.

Identical axes can generate different running noises depending on the parameterisation, mode of operation, type of mounting, installation environment and components.

Requirements:

– For use with reduced particle emission. The product is cleaned ➔ 8.4 Cleaning axis.
– The motor encoder is referenced to the reference mark by homing.
– The motor encoder has the absolute reference to the reference mark.

- The direction of movement of the slide is determined by the direction of rotation of the motor.
- The mounting of the drive system has been checked.
- The protective cover of the cover strip is removed.
- The installation on the motor has been checked.
- There are no foreign objects within the range of motion of the drive system.
- Maximum permissible feed force and drive torque as a function of acceleration, deceleration, e.g. with stop function or quick stop, speed, moving mass and mounting position, are not exceeded.
- Axis is not mechanically overloaded and dynamic setpoint deviation is not exceeded as a result of force peaks, torque peaks or overshoot effects, e.g. overrunning the end position.
  Overloads and overruns as a result of jerk limitation must be restricted by reduced acceleration and deceleration setpoints or optimised controller settings.
- The software end positions are not within the effective range of the mechanical stops.

ELGD-BS-KF-WD		**-100**	**-120**
Max. stop speed	[m/s]	0.01	
Max. stop energy	[mJ]	1	
Calculation of the stop energy E			
$E = \frac{v^2 * m}{2}$		– v = stop speed – m = mass of all linear moving components	

Tab. 3: Speed and energy at the end positions

1. Start check run.
2. Select a permissible reference point for homing.
3. Start the homing with reduced speed setpoints, acceleration setpoints and deceleration setpoints.
4. Start the test run with reduced speed setpoints, acceleration setpoints and deceleration setpoints.
5. Check that the slide completes the entire travel cycle within the specified time.
   ⇨ The slide stops its travel when it reaches a limit switch and the drive system is ready for operation.

8 Maintenance

8.1 Safety

⚠ WARNING

Unexpected movement of components.
Injury due to impacts or crushing.
- Before working on the product, switch off the control and secure it to prevent it from being switched back on accidentally.

8.2 Check reversing backlash

- Check the reversing backlash (reversal error) of the slide at every maintenance interval, e.g. lubrication interval. If the maximum permissible reversing backlash is exceeded, replace the axis.

ELGD-BS-KF-WD		-100	-120
Max. permissible reversing backlash	[mm]	0.15	

8.3 Adjusting cover strip

1. Check the cover strip for wave formation every 2000 km.
2. If waves form, readjust the cover strip.
3. Replace the belt reversals and the cover strip if they can no longer be adjusted.

Adjusting the cover strip for magnetic deflection

NOTICE

Observe when replacing the cover strip.
- If the cover strip is too long, waves will form or the cover strip will lift.
- If the cover strip is too short, the clamping effect of the threaded pin is insufficient and the cover strip can come loose during operation.

1. Remove the covers [1] on both sides. Use a screwdriver to carefully lever all locking lugs off the slide.

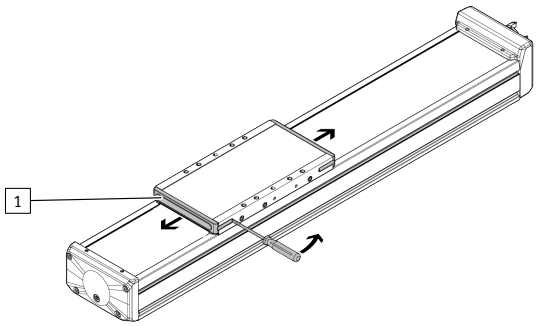

2. Remove the covering [2].

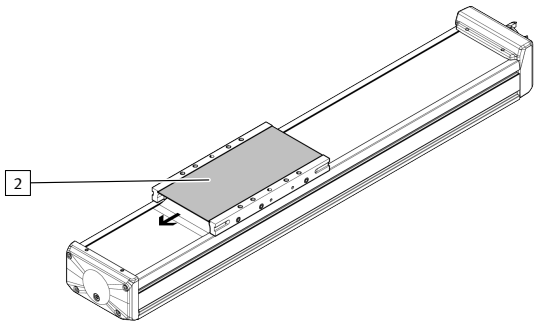

3. Check the cover strip for wave formation.
   – If waves form, readjust the cover strip ➔ continue with step 4.
   – If there is no wave formation, mount the removed carriage components ➔ continue with Step 6.

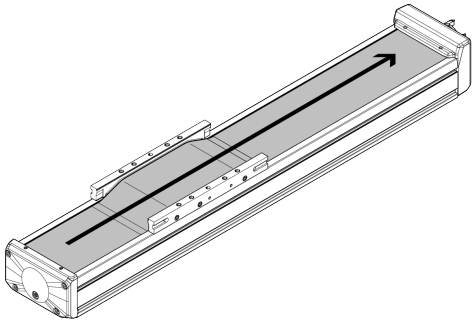

4. Unscrew clamping screws on one side [3].

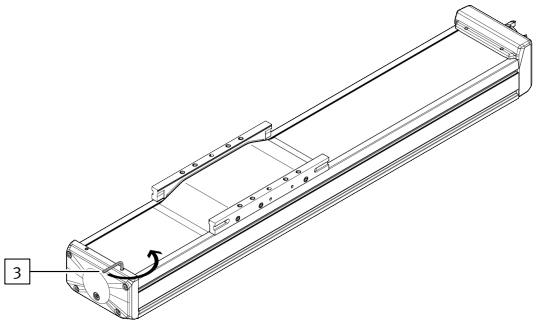

5. Push the slide [6] to the drive cover [7] with the clamping screws tightened. Fit the cover strip [5] flush on the slide. The cover strip is automatically attracted to the belt reversals by the integrated magnets. Without axial tensile load press the cover strip into the profile slot over the entire length of the drive and align it centrally [4]. Check the seating of the cover strip. If there are any raised areas in the slide area or if waves form, the entire step must be repeated.
   Fasten the cover strip and tighten the clamping screws [3] to 0.5 Nm.

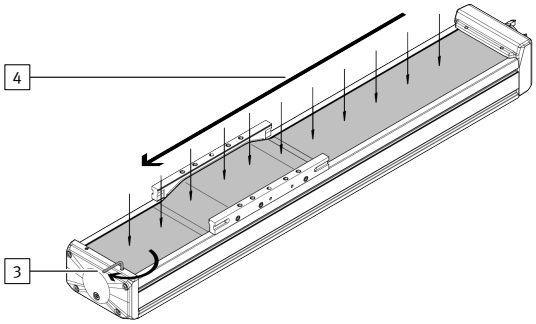

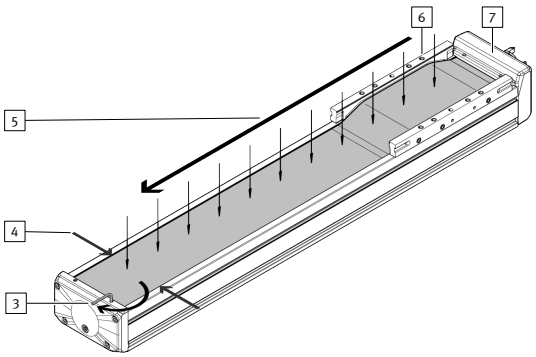

6. Place the covering [2] on the slide. The cover strip must not contact the covering.

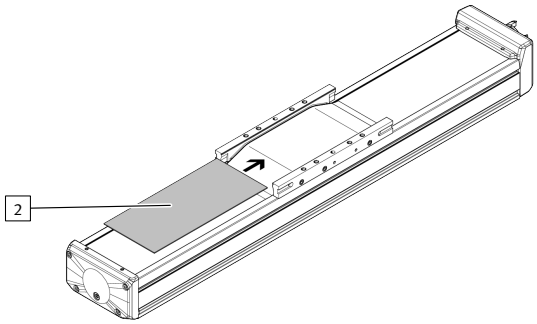

7. Place the covers [1] on both sides of the slide and press until they click into place.

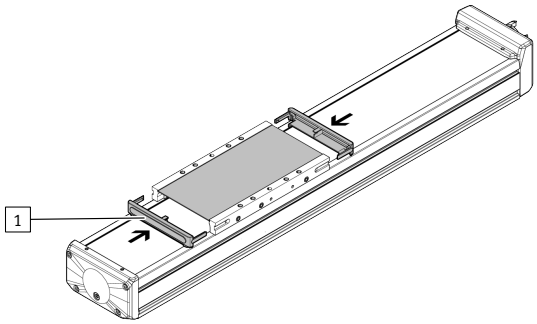

8. Push the slide over the entire length of the drive in both directions and check that the cover strip is correctly seated. If the cover strip and the cover come into contact, the entire adjustment must be repeated.
9. Waves are still formed. Perform the following additional actions in step 5 before aligning the cover strip:
   – First step: use scissors to cut the corners of the cover strip ≤ 2 mm diagonally.
   – Next: use scissors to shorten the cover strip by 1 mm step by step.

8.4 Cleaning axis

- Clean the product with a clean, soft cloth and non-abrasive cleaning agents.

For use with reduced particle emission:
– Remove abraded particles and soil from the product:
  – Prior to initial commissioning
  – Regularly during operation

8.5 Lubricating axis

Axis ELGD-BS-KF-WD

The axis is lubricated for life.
Relubrication of the axis is not necessary under standard conditions.

Relubricating axis ELGD-BS-KF-WD-...-GN

Requirements:
– The pressure grease gun LUB-1, 647958 is available.
– The roller bearing grease ELKALUB VP 922: 8117071 is available.
– The lubrication adapter LUB-1-TR-I, 647959 or LUB-1-TR-L, 647960 is available.

1. Calculate the load comparison factor f_v with the formula for combined loads ➔ 10.1 Technical data, mechanical.

2. Take the lubrication interval S_{int} as a function of the load comparison factor f_v from the characteristic curve.

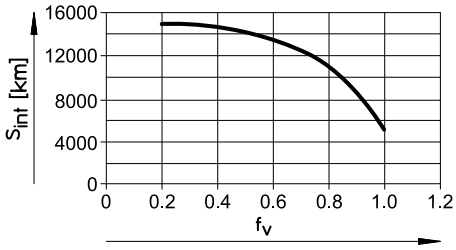

3. Determine the load factors:
   - Dusty and dirty environment.
   - Nominal stroke < 300 mm or > 2000 mm.
   - Ambient temperature > +40 °C.
   - Service age > 3 years.
   - The travel profile matches triangular operation, e.g. frequent acceleration and braking.
4. If there is a load factor, halve the lubrication interval S_{int}. If there are multiple load factors, reduce the lubrication interval S_{int} to a quarter of the standard interval.
5. If necessary, replace the needle point of the pressure grease gun with the lubrication adapter with axial or radial outlet.
6. Press the pressure grease gun onto the lubrication nipple for the ball screw. Press in the roller bearing grease front [v] centre.

ELGD-BS-KF-WD		-100	-120
Volume of grease per lubrication nipple	[g]	9	10

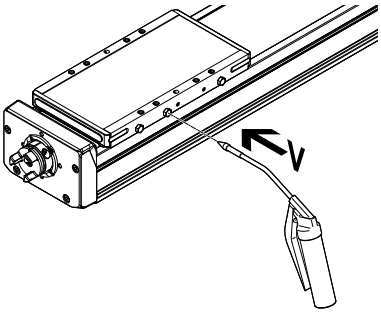

7. Press the pressure grease gun on the lubrication nipple of the recirculating ball bearing guide. Press in the roller bearing grease front [v] both sides, left and right.

ELGD-BS-KF-WD	-100	-120
Volume of grease per lubrication nipple [g]	7	10

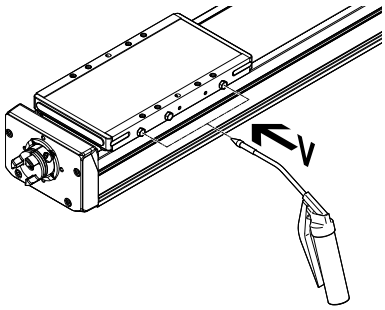

8. Move along the complete travel distance during the lubrication process to distribute the grease evenly in the interior.
9. If necessary, grease other components with roller bearing grease, e.g. the guide rail.

9 Fault clearance

⚠ WARNING

Unexpected movement of components.
Injury due to impacts or crushing.
- Before working on the product, switch off the control and secure it to prevent it from being switched back on accidentally.

⚠ WARNING

Risk of injury due to unexpected movement of components.
- Protect the positioning range from unwanted access.
- Keep foreign objects out of the positioning range.
- Perform commissioning with low dynamic response.

Malfunction	Cause	Remedy
Loud running noises, vibrations or rough running of the axis.	Coupling distance too short.	– Observe the permissible coupling spacings ➔ Assembly instructions of the motor mounting kit.
	Torsional stresses	– Install axis without tension. Make sure that the contact surface is flat ➔ 6.3 Mounting axis. – Change the arrangement of the payload. – Align axes parallel to each another.
	Current controller settings.	– Optimise controller data, e.g. speed, acceleration, ...
	Resonance oscillation of the axis.	– Change travel speed.
	Wear on bearing or guide.	– Contact local Festo Service. – Replace axis.

Malfunction	Cause	Remedy
Loud running noises, vibrations or rough running of the axis.	Wear of the ball screw.	– Check reversing backlash ➔ 8.2 Check reversing backlash. – Contact local Festo Service. – Replace axis.
Vibrations on the slide.	Operation at the resonant frequency of the axis.	– Change travel speed. – Change acceleration. – Increase axis stiffness, e.g. shorter support distances. – Change the payload geometry.
Long oscillations of the profile.	Resonant frequency of profile and payload too low.	– Increase axis stiffness, e.g. shorter support distances. – Change the payload geometry.
Slide does not move.	Coupling slips.	– Check the mounting of the shaft-hub connection ➔ Assembly instructions of the motor mounting kit.
	Loads are too high.	– Reduce forces and torques. Consider dynamics.
	Screws too long for mounting payload.	– Observe screw-in depth ➔ 6.4 Mounting payload on the standard slide.
	Ball screw blocked.	– Contact local Festo Service. – Replace axis.
Overruns the end position.	Sensor does not switch.	– Check sensor, installation and parameterisation.
Idling torque too high.	Wear in the drive train.	Contact local Festo Service. – Replace axis.
Wave formation on the cover strip or aluminium abrasion on the axis.	Wear on belt reversals.	– Retension cover strip ➔ 8.3 Adjusting cover strip. – Replace belt reversal and cover strip.

Tab. 4: Fault clearance

10 Technical data

10.1 Technical data, mechanical

ELGD-BS-KF-WD		-100-...-5P	-100-...-10P	-100-...-20P
Design		Electromechanical axis with ball screw		
Guide		Recirculating ball bearing guide		
Mounting position		Any		
Max. feed force with axial kit	[N]	1100		
Max. feed force with parallel kit	[N]	1100		
Max. drive torque with parallel kit	[Nm]	1		
Max. no-load drive torque at travel speed	[Nm]	0.26	0.077	0.491
	[m/s]	0.25	0.5	1
Maximum rotational speed	[rpm]	8000		
Max. speed	[m/s]	0.66	1.33	2.67
Max. acceleration	[m/s²]	15		
Repetition accuracy	[mm]	± 0.01		
Feed constant	[mm/rev]	5	10	20

ELGD-BS-KF-WD		-100-...-5P	-100-...-10P	-100-...-20P
Ambient temperature	[°C]	0 ... +60		
Storage temperature	[°C]	–20 ... +60		
Degree of protection		IP40, sealing air connections closed		
Max. permissible forces and moments on the overall axis				
Fy	[N]	4092		
Fz	[N]	2250		
Mx	[Nm]	160		
My	[Nm]	191		
Mz	[Nm]	191		
Calculating the load comparison factor				
fv		$fv = \frac{\lvert Fy1 \rvert}{Fy\ zul} + \frac{\lvert Fz1 \rvert}{Fz\ zul} + \frac{\lvert Mx1 \rvert}{Mx\ 5000} + \frac{\lvert My1 \rvert}{My\ 5000} + \frac{\lvert Mz1 \rvert}{Mz\ 5000} \leq 1$		
		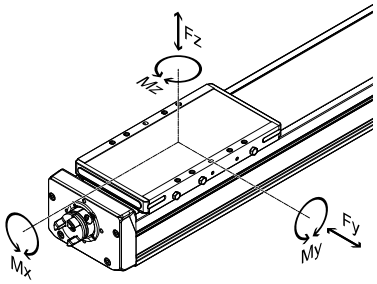		

Tab. 5: Technical data, mechanical

ELGD-BS-KF-WD		-120-...-5P	-120-...-10P
Design		Electromechanical axis with ball screw	
Guide		Recirculating ball bearing guide	
Mounting position		Any	
Max. feed force with axial kit	[N]	1880	
Max. feed force with parallel kit	[N]	1880	
Max. drive torque with parallel kit	[Nm]	3	
Max. no-load drive torque at travel speed	[Nm]	0.27	0.39
	[m/s]	0.25	0.5
Maximum rotational speed	[rpm]	6667	
Max. speed	[m/s]	0.56	1.11
Max. acceleration	[m/s²]	15	
Repetition accuracy	[mm]	± 0.01	
Feed constant	[mm/rev]	5	10
Ambient temperature	[°C]	0 ... +60	
Storage temperature	[°C]	–20 ... +60	
Degree of protection		IP40, sealing air connections closed	
Max. permissible forces and moments on the overall axis			
Fy	[N]	5914	
Fz	[N]	5280	
Mx	[Nm]	290	
My	[Nm]	590	
Mz	[Nm]	527	
Calculating the load comparison factor			

ELGD-BS-KF-WD	-120-...-5P	-120-...-10P
fv	$fv = \frac{\lvert Fy1 \rvert}{Fy\,zul} + \frac{\lvert Fz1 \rvert}{Fz\,zul} + \frac{\lvert Mx1 \rvert}{Mx\,5000} + \frac{\lvert My1 \rvert}{My\,5000} + \frac{\lvert Mz1 \rvert}{Mz\,5000} \leq 1$	
	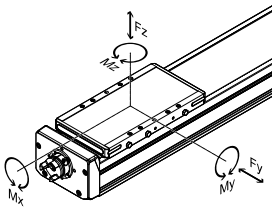	

Tab. 6: Technical data, mechanical

10.2 Characteristic curves of support distances

The maximum permissible support distance L without profile mounting EAHF-E24 as a function of force Fy/Fz at a maximum deflection of 0.5 mm.

Support distance	Force load
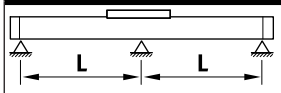	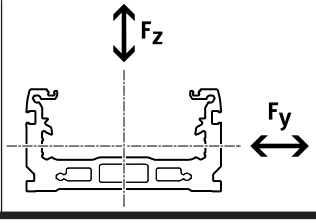

Tab. 7: Overview of support distance and force load

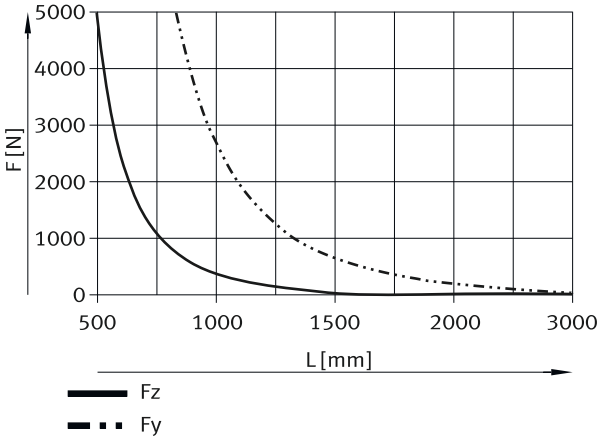

Fig. 9: ELGD-BS-KF-WD-100, support distance L as a function of force Fy and Fz

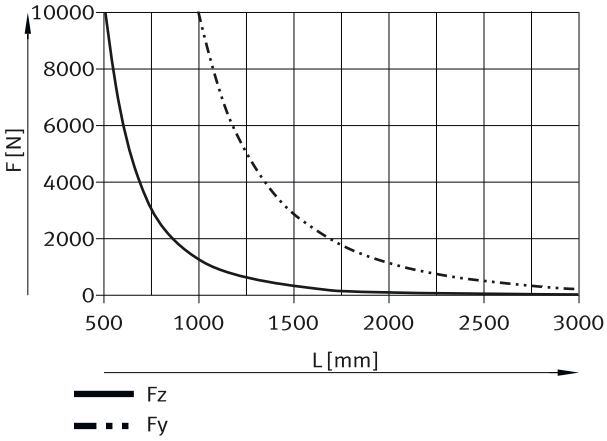

Fig. 10: ELGD-BS-KF-WD-120, support distance L as a function of force Fy and Fz

10.3 Characteristic speed curves

Speed v as a function of rotational speed n.

Rotational speed n and speed v are stroke-dependent. Observe the maximum permissible speed v as a function of working stroke l.

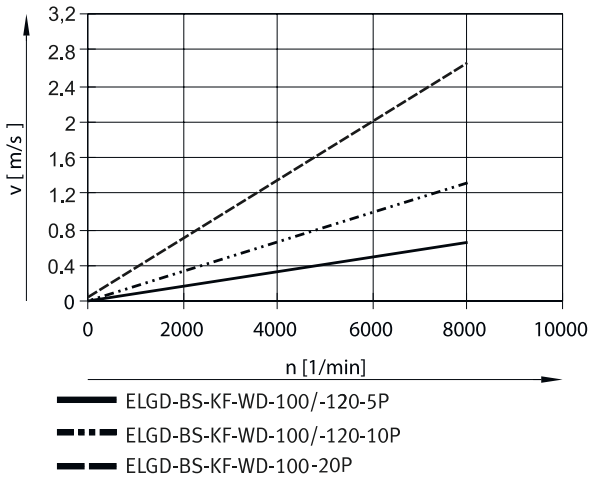

Fig. 11: Speed v as a function of rotational speed n

Speed v as a function of working stroke l.

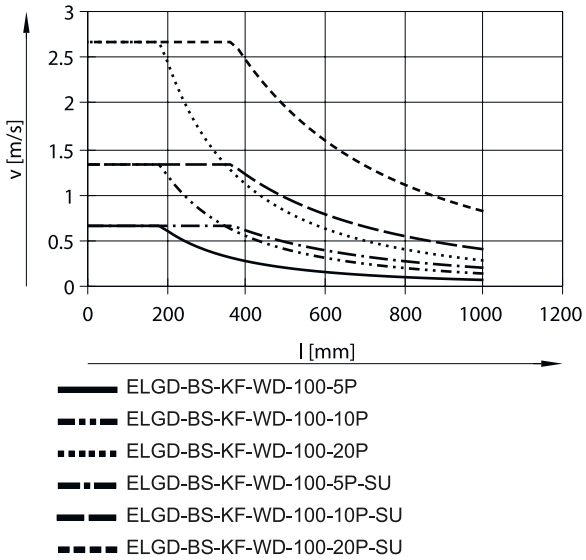

Fig. 12: ELGD-BS-KF-WD-100-L, speed v as a function of working stroke l

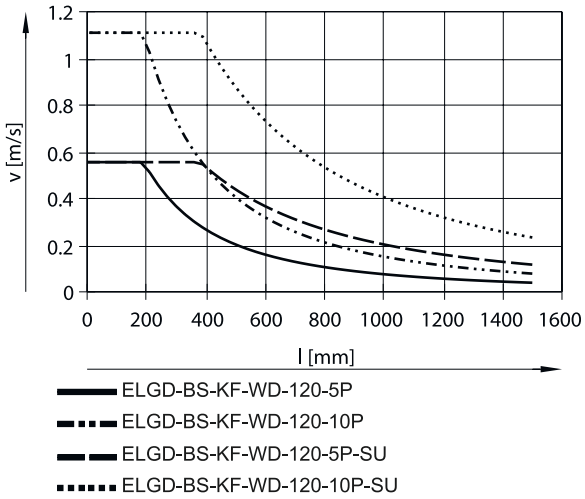

Fig. 13: ELGD-BS-KF-WD-120, speed v as a function of working stroke l

Festo SE & Co. KG
Ruiter Straße 82
73734 Esslingen
Germany

Phone: +49 711 347-0
www.festo.com

© 2026 all rights reserved to Festo SE & Co. KG