Product Information

3377DVR125P62

EAN 4031582331592

Swivel castor with total lock, tail end of castor, housing made of pressed steel, bright zinc plated, blue passivated, double ball bearing swivel head, wheel axle with nut, plate fitting. Wheel centre made of pressed steel, Tread: solid rubber, black, roller bearing

Technical Data	
Wheel diameter	125 mm
Width of Tread	24 mm
Size of Plate	105 x 85 mm
Plate hole centres	80/77 x 60 mm
Plate hole	9 mm
Offset	40 mm
Swivel Interference	233 mm
Overall height	155 mm
Temperature	- 20 / + 60 °C
Standard	EN 12532
Weight	1.273 kg
Swivel Radius	116.5 mm
Hardness of tread	Shore A 85
Load capacity	100 kg
Load capacity (static)	200 kg

Roll performance	+ + + + +
Movement noise	+ + + + +
Attrition	+ + + + +
Corrosion resistance	+ + + + +

© Copyright 2018, TENTE International, www.tente.com, 27/02/2018

Product Information

3377DVR125P62

EAN 4031582331592

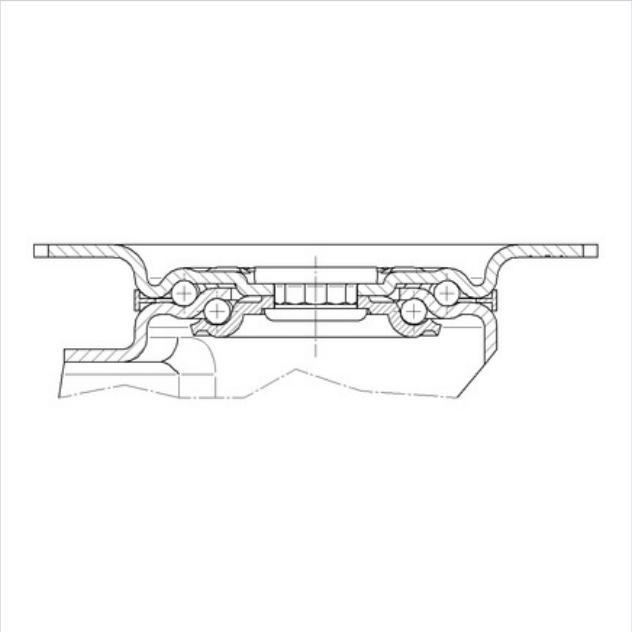

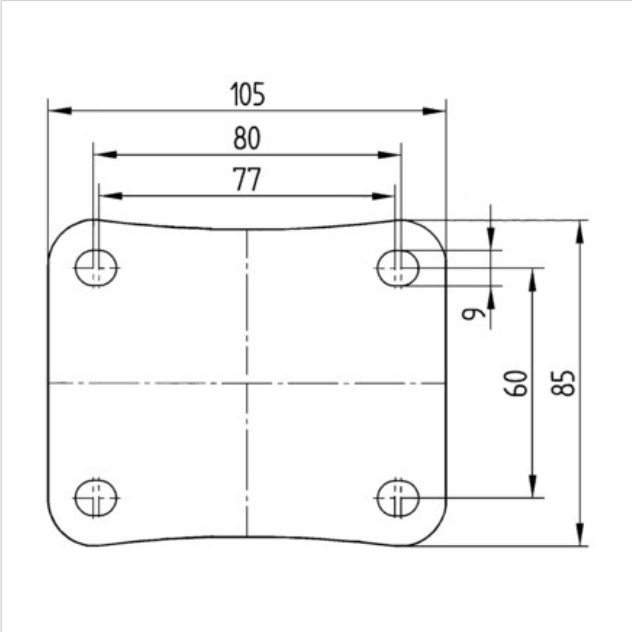

© Copyright 2018, TENTE International, www.tente.com, 27/02/2018