Photo-electric sensors

OsiSense XU Application
Material handling series
With solid-state and analogue output signal 4…20 mA
Laser transmission

Design 90 x 90 mm

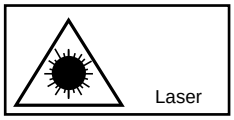

Laser class 1, conforming to IEC 600825-1
Laser class 2 pointer, conforming to IEC 600825-1

Visible laser radiation:
do not stare into beam

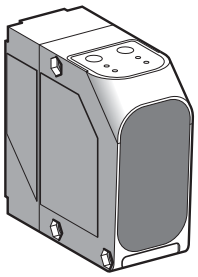

System		Object distance sensor	Reflector distance sensor
Type of transmission		**Infrared laser, class 1** (905 nm) **Red laser pointer, class 2** (650 nm) *(1)*	
Measuring distance		**0.2…6 m** (on white 90%) **0.2…6 m** (on grey 18%) **0.2…2.5 m** (on black 6%) *(2)*	**0.2…30 m** (with reflector XUZ C250)
References			
5-wire solid-state outputs (x 2) analog output (x 1)	PNP, 4…20 mA	**XUE 5AA2NM12**	**XUE 1AA2NM12**
Weight (kg)		0.2	0.2
Characteristics			
Product certifications		cULus, CE	
Connection		M12, 5-pin connector	
Degree of protection	Conforming to IEC 60529	IP 67	
Vibration resistance	Conforming to EN/IEC 60947-5-2 and IEC 60947-4-2	Amplitude ±0.5 mm (f = 10 to 55 Hz)	
Shock resistance	Conforming to EN/IEC 60947-5-2 and IEC 60947-4-1	30 gn, duration 11 ms	
Ambient air temperature	For operation	- 20…+ 50 °C	
	For storage	- 40…+ 80 °C	
Repeat accuracy (analog output) *(3)*		Fast mode: ± 15 mm Slow mode: ± 10 mm	Fast mode: ± 10 mm Slow mode: ± 5 mm
Fast mode/slow mode (response time)		13 ms/80 ms	30 ms/65 ms
Linearity		≤ ± 40 mm	≤ ± 60 mm
Materials	Case	ABS, mechanical shocks resistant	
	Lenses	PMMA	
Rated supply voltage		18…30 V ⎓	
Voltage limits (including ripple)		±10% of rated operational voltage	
Immunity to ambient light		Conforming to EN/IEC 60947-5-2	
Output signal		Solid-state outputs: 2 x PNP analog output: 4…20 mA	
Light spot size		4 x 7 mm at 2 m 3 x 10 mm at 4 m 4 x 12 mm at 6 m	15 x 20 mm at 10 m 30 x 40 mm at 20 m 45 x 60 mm at 30 m
Switching capacity		100 mA, with protection against reverse polarity, overload and short-circuit	
Voltage drop, closed state		≤ 2.4 V	
Current consumption, no-load		≤ 125 mA on 24 V ⎓	
Maximum switching frequency		Fast mode: 38 Hz Slow mode: 16 Hz	
Indicator lights	Output state	2 yellow LEDs	
	Supply on	1 green LED	
	Slow mode	1 orange LED	
	Parametering	4 red LEDs	
Parametering		By 2 buttons: Set and Toggle	

(1) In operating mode, the red laser class 2 pointer can be stopped for working on infrared transmission.
(2) % of object remission.
(3) Information taken into account after 30 minutes.

Photo-electric sensors

OsiSense XU Application
Material handling series
With analogue output signal 4…20 mA
Laser transmission

References of accessories

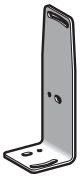

XUZ A618

XZ CC12FCM50B

Description	For use with	Dimensions (mm)	Reference	Weight kg
Fixing bracket (screws, nuts and washers included)	XUE 5AA2NM12 XUE 1AA2NM12	–	**XUZ A618**	0.062
Adhesive reflector	XUE 1AA2NM12	250 x 250	**XUZ C250**	0.040
Straight connector, wired by user M12, 5-pin female	XUE 5AA2NM12 XUE 1AA2NM12	–	**XZ CC12FDM50B**	0.020
Elbowed connector, wired by user M12, 5-pin female	XUE 5AA2NM12 XUE 1AA2NM12	–	**XZ CC12FCM50B**	0.020

Presentation

Minimum size of detectable object related to distance

XUE 5AA2NM12

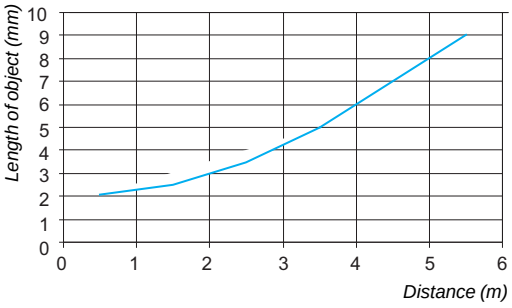

***Note**: Typical values for application involving measurements on a square white object*

Light spot size (not visible)

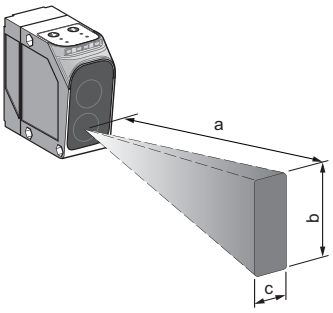

	XUE 5AA2NM12				XUE 1AA2NM12			
a (m)	0	2	4	6	0	10	20	30
b (mm)	10	7	10	12	10	20	40	60
c (mm)	5	4	3	4	5	15	30	45

Wiring schemes

M12 connector

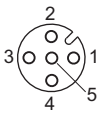

Pin n°/colour
1 BN: Brown
2 WH: White
3 BU: Blue
4 BK: Black
5 GY: Grey

XUE 5AA2NM12

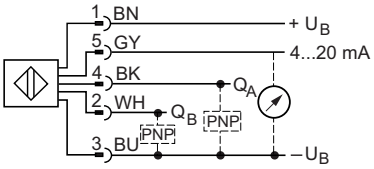

XUE 1AA2NM12

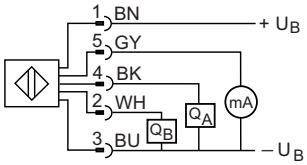

Dimensions

XUE 5AA2NM12 and XUE 1AA2NM12

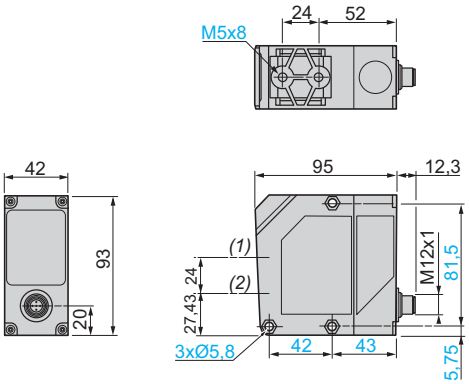

XUE 5AA2NM12 and XUE 1AA2NM12 with fixing bracket XUZ A618

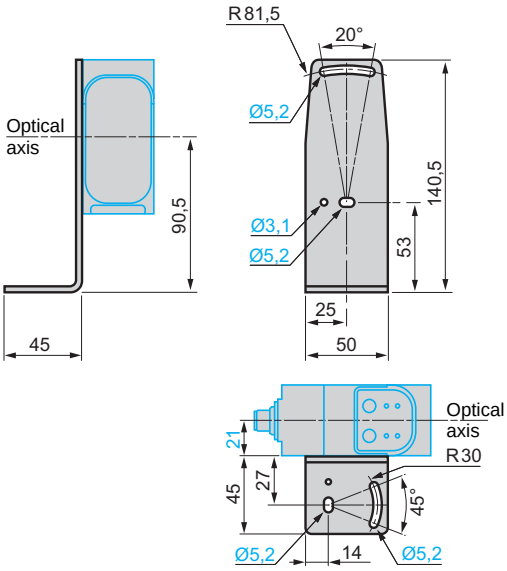

(1) Receiver optical axis.
(2) Transmitter optical axis.