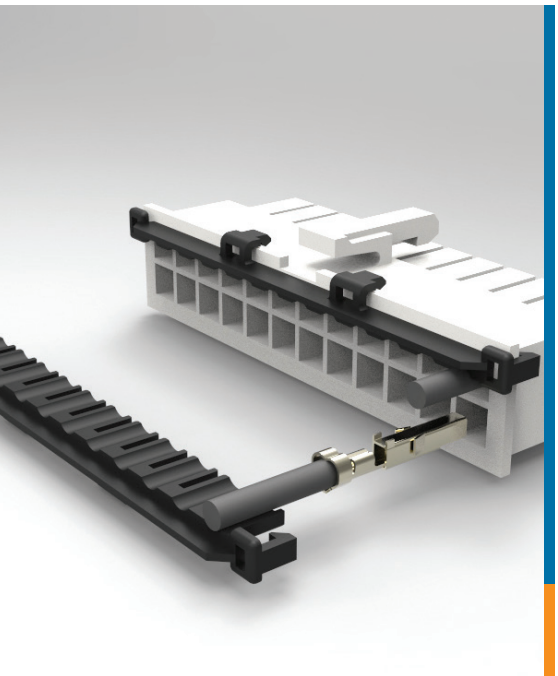

VAL-U-LOK CONNECTORS WITH TPA

IEC 603335-1 and UL V-0 Compliant

Additional housing material option

Additional Housing Material Option

Expanded Offering

The VAL-U-LOK product line has been expanded with new models accommodating Terminal Position Assurance (TPA) devices to help prevent contact back-out and a new material meeting both the glow wire test and UL 94 V-0. These additions to the 4.2 mm (.165 in) centerline product family are double row devices. Rated up to 600VAC and up to 9A per line, they offer up to 24 positions as panel mount plugs, free-hanging plugs and receptacles. The new connectors with TPAs are intermatable with existing VAL-U-LOK connectors and headers, supporting wire-to-panel, wire-to-wire and wire-to-board applications.

New crimp, pin-and-socket contacts for discrete 26-18 AWG wires are designed for the new housings and work with the TPA devices. Snapping the TPA devices into place helps to assure contacts are fully seated in the housing and provides secondary protection against a contact backing out of its cavity when subjected to vibration, shock or pulling force.

Key Features

- Terminal Position Assurance (TPA) devices help ensure contacts are fully seated in the housing and secondarily help secure contacts in housings, protecting against back-out
- Integral housing locking latch

Applications

- Household appliances
- Desktop computers
- Indoor/outdoor lighting
- Security systems
- Industrial controls
- HVAC control systems
- Storage and networking systems

Mechanical

- Positions: 2 to 24 (double row)
- Wire size: 26-18 AWG discrete wire
- Centerline pitch: 4.2 mm (.165 in)
- Operating temperature: -40°C to 105°C

Electrical

- Voltage rating: 600VAC
- Current rating: 9A

Materials

- Housings:
  1. Glow wire product compliant 750°C no flame according to IEC 60335-1 5th edition and UL 94 V-0;
  2. Glow wire product compliant 750°C no flame according to IEC 60335-1 5th edition and UL 94 V-2;
  3. UL 94 V-0 rated nylon;
  4. UL 94 V-2 rated nylon.
- Contacts:
  1. Brass, pre-tin

Standards & Specifications

- Product specification #108-2112
- Application specification #114-13172
- Instruction sheet #408-32113
- UL Recognized, File E315442

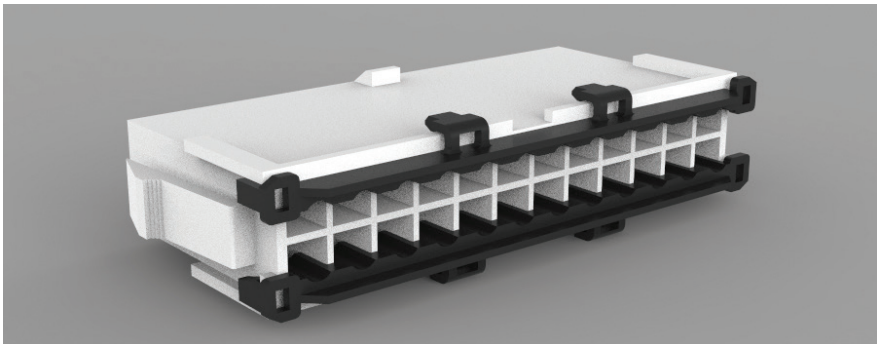

Product Image	Type/ Style	Flamma-bility	Part Number												
			Positions ›	2	4	6	8	10	12	14	16	18	20	22	24
	Receptacle	UL 94 V-2	x-1969597-y	-2	-4	-6	-8	1- -0	1- -2	1- -4	1- -6	1- -8	2- -0	2- -2	2- -4
		UL 94 V-0	x-1969614-y	-2	-4	-6	-8	1- -0	1- -2	1- -4	1- -6	1- -8	2- -0	2- -2	2- -4
		GWT&V-2*	x-1969603-y	-2	-4	-6	-8	1- -0	1- -2	1- -4	1- -6	1- -8	2- -0	2- -2	2- -4
		GWT&V-0**	x-2296205-Y	-2	-4	-6	-8	1--0	1--2	1- -4	1- -6	1- -8	2- -0	2- -2	2- -4
	Free Hanging Plug	UL 94 V-2	x-1969598-y	-2	-4	-6	-8	1- -0	1- -2	1- -4	1- -6	1- -8	2- -0	2- -2	2- -4
		UL 94 V-0	x-1969612-y	-2	-4	-6	-8	1- -0	1- -2	1- -4	1- -6	1- -8	2- -0	2- -2	2- -4
		GWT&V-2*	x-1969604-y	-2	-4	-6	-8	1- -0	1- -2	1- -4	1- -6	1- -8	2- -0	2- -2	2- -4
		GWT&V-0**	x-2296206-Y	-2	-4	-6	-8	1- -0	1- -2	1- -4	1- -6	1- -8	2- -0	2- -2	2- -4
	Panel Mount Plug	UL 94 V-2	x-1969599-y	-2	-4	-6	-8	1- -0	1- -2	1- -4	1- -6	1- -8	2- -0	2- -2	2- -4
		UL 94 V-0	x-1969613-y	-2	-4	-6	-8	1- -0	1- -2	1- -4	1- -6	1- -8	2- -0	2- -2	2- -4
		GWT&V-2*	x-1969605-y	-2	-4	-6	-8	1- -0	1- -2	1- -4	1- -6	1- -8	2- -0	2- -2	2- -4
		GWT&V-0**	x-2296207-Y	-2	-4	-6	-8	1- -0	1- -2	1- -4	1- -6	1- -8	2- -0	2- -2	2- -4

*Glow wire test according to EN/IEC 60335-1 and UL 94 V-2.

**Glow wire test according to EN/IEC 60335-1 and UL 94 V-0.

Terminal Position Assurance (TPA) Devices

Product Image	Type/Style	Wire Range (AWG)	Part Number												
			Positions ›	1	2	3	4	5	6	7	8	9	10	11	12
	Locking Plate	22-18	x-1969608-y	-1	-2	-3	-4	-5	-6	-7	-8	-9	1- -0	1- -1	1- -2
		22-26	x-1969609-y	-1	-2	-3	-4	-5	-6	-7	-8	-9	1- -0	1- -1	1- -2

Note: A TPA device is required for each row of terminals on a receptacle or plug housing. For example, an 18-position plug would require two 9-position TPAs. The user would need to order two TPA devices for each housing ordered.

Terminals and Application Tooling

Product Image	Terminal Type	Wire Range (AWG)	Insulation Range	Material & Finish	Terminal Part Numbers		Application Tooling	
					Strip form	Loose Piece	Applicator	Hand Tool
	Pin	26-22	.047 - .069 [1.2 - 1.75]	Brass, Pre-Tin	2238018-1	2238022-1	2266139-x	91387-1
		22-18	.060 - .122 [1.50 - 3.1]	Brass, Pre-Tin	2238016-1	2238020-1	2151096-x	91388-1
	Socket	26-22	.047 - .069 [1.2 - 1.75]	Brass, Pre-Tin	2238019-1	2238023-1	2266139-x	91387-1
		22-18	.060 - .122 [1.50 - 3.1]	Brass, Pre-Tin	2238017-1	2238021-1	2151096-x	91388-1

Part Number Ordering - Example for x-1969597-y Housing

-2 through -9
Substitute dash number listed for "y."
For example, a -2 signifies PN 1969597-2.

1- -0 through 2- -4
Substitute first number listed for "x" and second number listed for "y."
For example, a 2- -4 signifies PN 2-1969597-4.

Follow this same numbering scheme for receptacle housings, free hanging plug housings, panel mount plug housings and TPA devices listed on this page.

Frequently Asked Questions

Do you need confirmation that the contacts are seated? Is contact back-out a concern?
New models in the VAL-U-LOK connector system accept optional TPA devices. These devices help assure the contacts are fully seated in the housing and they help protect against potential disengagement when the wires are exposed to external pressure.

What is the physical configuration of the interconnection?
VAL-U-LOK connector system offers wire-to-wire, wire-to-board, and wire-to-panel configurations.

What are the current and voltage requirements for your application?
VAL-U-LOK connectors have a maximum current rating of 9 Amps in 2 position application, and they are rated 600 Volts AC/DC.

What are the flammability requirements for your application?
VAL-U-LOK connectors are offered with various housings rated UL 94 V-0, UL 94 V-2 and Glow Wire Test material according to IEC 60335-1.

What are the number of positions for the TPA version?
The housings of the VAL-U-LOK connector system designed for use with the optional TPA device are available in 2-24 position, dual row configurations.

What are the operating temperature requirements?
The VAL-U-LOK connector system has a maximum operating temperature of 105°C. For more information regarding operating temperatures refer to Product Specification 108-2112.

What is the benefit of choosing glow wire housings?
The VAL-U-LOK connector system offers glow wire rated housings that allow manufacturers of home appliances sold into the European market to comply with the IEC/EN 60335-1 5th edition standard and the possibility to use the TPAs (sold as optional) as error proofing devices.

TE Connectivity Technical Support Center

USA:	+1 (800) 522-6752
Canada:	+1 (905) 475-6222
Mexico:	+52 (0) 55-1106-0800
Latin/S. America	+54 (0) 11-4733-2200
Gemany:	+49 (0) 6251-133-1999
UK:	+44 (0) 800-267666
France:	+33 (0) 1-3420-8686
Netherlands:	+31 (0) 73-6246-999
China:	+86 (0) 400-820-6015

te.com

© 2016 TE Connectivity Ltd. family of companies. All Rights Reserved.

1-1773730-3 APP PDF 5/2016

VAL-U-LOK, TE Connectivity and the TE Connectivity (logo) are trademarks of the TE Connectivity Ltd. family of companies..

While TE has made every reasonable effort to ensure the accuracy of the information in this document, TE does not guarantee that it is error-free, nor does TE make any other representation, warranty or guarantee that the information is accurate, correct, reliable or current. TE reserves the right to make any adjustments to the information contained herein at any time without notice. TE EXPRESSLY DISCLAIMS ALL IMPLIED WARRANTIES REGARDING THE INFORMATION CONTAINED HEREIN, INCLUDING, BUT NOT LIMITED TO, ANY IMPLIED WARRANTIES OF MERCHANTABILITY OR FITNESS FOR A PARTICULAR PURPOSE. In no event will TE be liable for any direct, indirect, incidental, special or consequential damages arising from or related to recipient's use of the information. It is the sole responsibility of the recipient of this information to verify the results of this information using their engineering and product environment, Recipient assumes and and all risks associated with the use of the information. The dimensions in this document are for reference purposes only and are subject to change without notice. All specifications are subject to change without notice. Consult TE for the latest dimensions and design specifications.