STRICTLY CONFIDENTIAL

SUBJECT TO NON-DISCLOSURE AGREEMENT

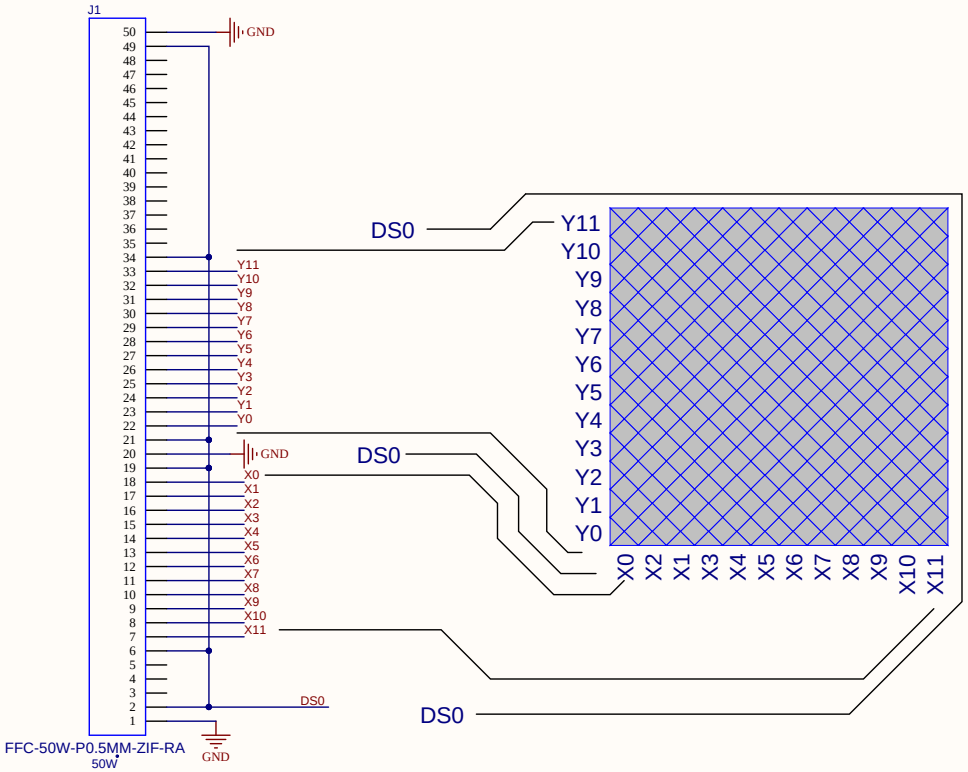

© 2017 Microchip Technology Inc - this drawing and its contents are strictly confidential and provided for INFORMATION PURPOSES ONLY.
Under NO circumstances should the drawing and its contents be copied. sold, transferred or reproduced in whole or part without the prior written consent of Microchip Technology.

Iss	Notes	ECN	Drn	Date
A1	Chamge to MHCP drawing border	N/A	PFC	30th June 2017
A0	First Issue	N/A	DC	25th June 2015

Filename : B-75608.SchDoc

Drn : P Cassidy

Sheet : 1 Of 1

Checked :

Approved :

CAD :

Title : Copper Sensor 12X 12Y

Number : B-75608

Project : mXT144U

MICROCHIP