Extract from the online catalog

SACB- 6/3-L-M12-M8

Order No.: 1516247

http://eshop.phoenixcontact.de/phoenix/treeViewClick.do?UID=1516247

Sensor/actuator box, M8 socket, 6 Slots, 3-position, Status indication: Yes, pnp 90°, Shielding: No

Commercial data	
GTIN (EAN)	4017918967178
sales group	D102
Pack	1 pcs.
Customs tariff	85366990
Weight/Piece	0.1102 KG
Catalog page information	Page 112 (PC-2009)

Product notes

WEEE/RoHS-compliant since: 01/01/2008

http://www.download.phoenixcontact.com Please note that the data given here has been taken from the online catalog. For comprehensive information and data, please refer to the user documentation. The General Terms and Conditions of Use apply to Internet downloads.

Technical data

General data

Rated voltage	24 V DC
Max. operating voltage U_{max}	30 V DC
Current carrying capacity per I/O signal	2 A
Current carrying capacity per slot	2 A
Total rated current	4 A

Number of positions	3
Number of slots	6
Degree of protection	IP65/IP67
Inflammability class acc. to UL 94	V0
Ambient temperature (operation)	-30 °C ... 80 °C
Sensor/actuator connection system	M8 socket

Local diagnostics function

Local diagnostics	Supply voltage per module Green LED
	Status display I/O Yellow LED

Master cable data

Type of connection	M12 plug connection
Tightening torque - master cable - plug connection	0.4 Nm
Tightening torque slot sensor/actuator cable	0.2 Nm
Tightening torque screw plug	0.2 Nm

Insulation material

Housing material	PBT
Material of the moulding mass	PUR
Contact material	CuSn
Contact surface material	Ni/Au
Contact carrier material	PA
Material of contact, master cable side	CU alloy
Material of contact surface, master cable side	Gold-plated
Material of threaded sleeve	Cu alloy
Material of threaded sleeve surface	Nickel-plated
Material, O-ring	NBR

Pin assignment

Slot/position = Wire color or connection	1 / 4 (A) = P
	2 / 4 (A) = J
	3 / 4 (A) = T
	4 / 4 (A) = S
	5 / 4 (A) = G
	6 / 4 (A) = R
	1-6 / 1 (+ 24 V) = A
	1-6 / 3 (0 V) = L

Certificates / Approvals

Certification	CUL, UL

CUL

Nominal voltage U_N	24 V

UL

Nominal voltage U_N	24 V

Accessories

Item	Designation	Description
Marking		
0809984	ZBF10:SO/CMS	Zack marker strip, flat, in 10 mm pitch, labeled according to customer specifications, 10-section, divisible, color: White
0809997	ZBF10:UNBEDRUCKT	Zack marker strip, flat, in 10 mm pitch, unprinted, 10-section, for individual labeling with M-PEN 0,8, X-PEN, or CMS-P1-PLOTTER
Protection and sealing elements		
1682540	PROT-M8	An M8 screw plug for the unoccupied M8 sockets of the sensor/ actuator cable, boxes and flush-type connectors
Socket		
1520990	SAC-8P-M12FR-PURMC/	M12 socket, angled, 8-pos., with connected master cable, for sensor/actuator box with M8 slots, cable length: 0.2 m ... 40 m
Tools		
1208461	SAC BIT M8-D10	Nut for assembling sensor/actuator cables with M8 connector and for M8 connectors with QUICKON fast connection technology, for 4 mm hexagonal drive
1208474	SACC BIT M8-D12	Nut for assembling SACC M8 connectors for free assembly with longitudinal knurl, excluding M8 connectors with QUICKON fast connection technology, for 4 mm hexagonal drive
1206463	SZK PZ2 VDE	Screwdriver, PZ crosshead, VDE insulated, size: PZ 2 x 100 mm, 2-component grip, with non-slip grip
1208487	TSD 02 SAC	Torque screwdriver, with preset torque of 0.2 Nm and 4 mm hexagonal drive for M8 connectors

Diagrams/Drawings

Dimensioned drawing

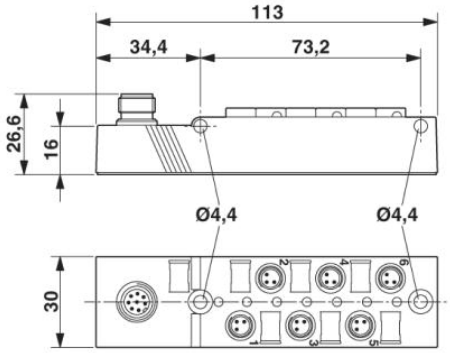

Circuit diagram

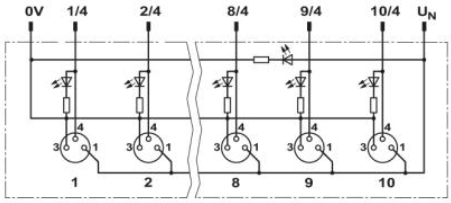

Schematic diagram

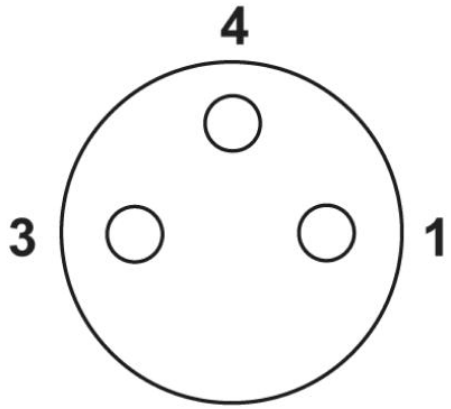

M8 slot, socket, 3-pos.

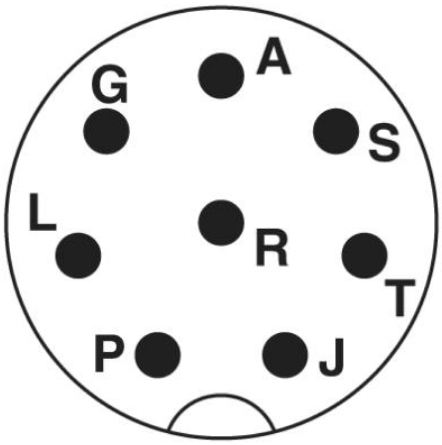

M12 plug connection pin, 8-pos.

Address

PHOENIX CONTACT Ltd
Halesfield 13
Telford Shropshire TF7 4PG,GB
Phone 01952 681 700
Fax 01952 681 799
http://www.phoenixcontact.co.uk

© 2010 Phoenix Contact
Technical modifications reserved;