Sauls Wharf House
Crittens Road
Great Yarmouth
Norfolk
NR31 0AG

Telephone +44 (0)1493 602602
Email:sales@midasdisplays.com
Email:tech@midasdisplays.com
www.midasdisplays.com

MC128064E6W-SPTLY-V2	128 x 64	Font Set	LCD Module
Specification			
Version: 1		Date: 31/10/2016	
Revision			

Display Features			
Resolution	128 x 64		
Appearance	Black on Yellow/Green		
Logic Voltage	5V		
Interface	Parallel		
Font Set	English/European/Japanese		
Display Mode	Transflective		
LC Type	STN		
Module Size	75.00 x 52.70 x 13.00		
Operating Temperature	-20°C ~ +70°C		
Construction	COB	Box Quantity	Weight / Display
LED Backlight	Yellow/Green	45 pcs	36.11 grams

RoHS compliant

* - For full design functionality, please use this specification in conjunction with the RA6963 specification. (Provided Separately)

Display Accessories	
Part Number	**Description**
VBWFD1	USB PIC18F2550 microcontroller board to 20-way Single in-line COB Graphic LCD.

Optional Variants	
Appearances	**Voltage**
Black on White White on Blue	

Mechanical Specifications					
Module Size	75.00 x 52.70 x 13.00 (With Backlight)				W x H x D mm
Viewing Area	60.00 x 32.50	W x H mm	Hole-to-Hole	70.00 x 49.70	W x H mm
Dot Size	0.39 x 0.39	W x H mm	Dot Pitch	0.04 x 0.04	W x H mm

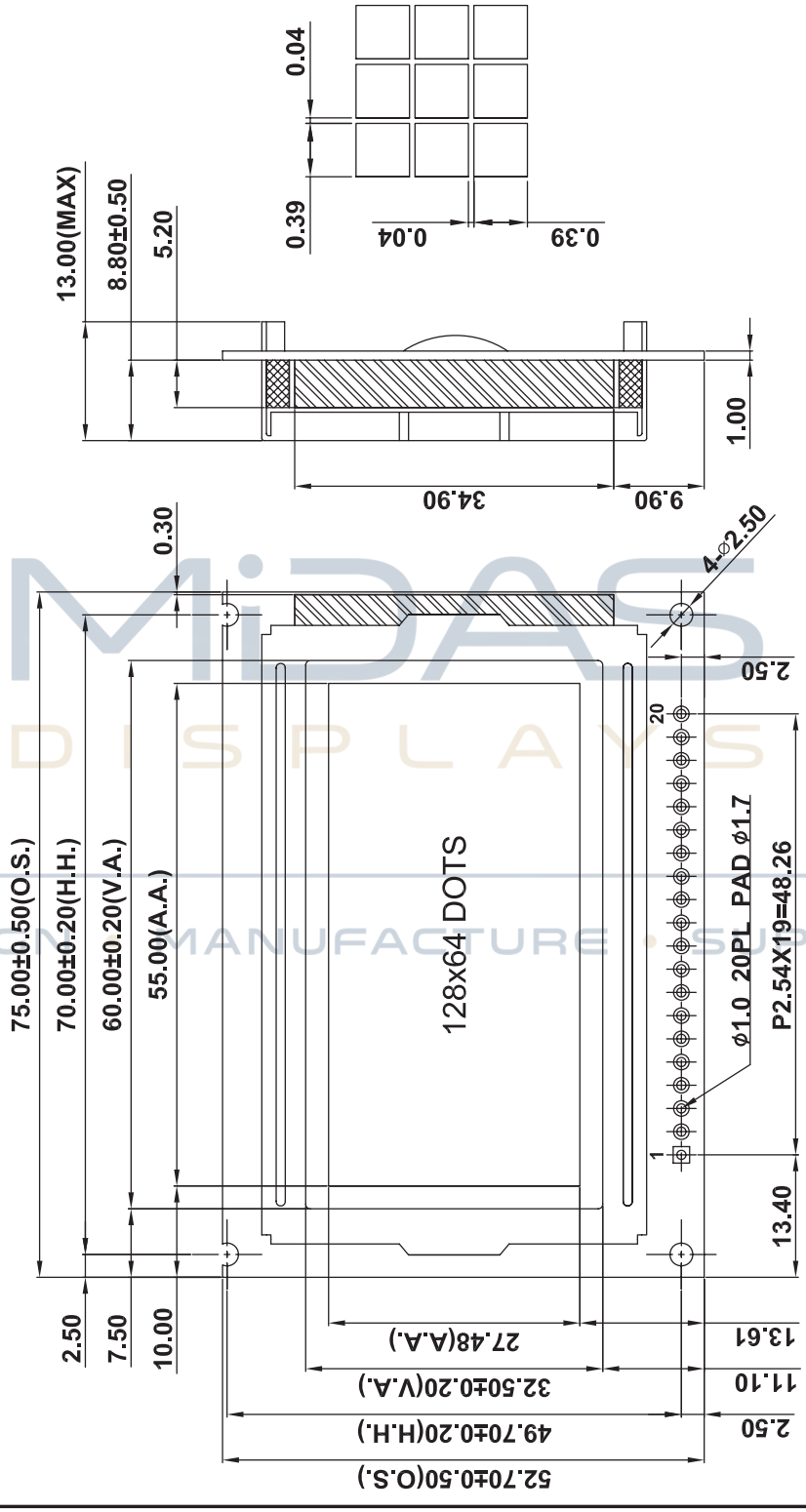

MiPAS DISPLAYS
DESIGN • MANUFACTURE • SUPPLY

MC128064E6W-SPTLY-V2	128 x 64	Font Set	LCD Module
Specification			
Version: 1		Date: 31/10/2016	
Revision			

Pin Layout

Pin	Symbol	Description	Remarks
1	FG	Module Frame Ground	
2	Vss	GND	
3	VDD	Power Supply for LCM	5.0V
4	V0	Contrast Adjust	
5	WR	Data Write	
6	RD	Data Read	
7	CE	Chip Enable	
8	C/D	Command / Data Select	
9	RST	Reset Signal	
10	DB0	Data bus Line	
11	DB1	Data bus Line	
12	DB2	Data bus Line	
13	DB3	Data bus Line	
14	DB4	Data bus Line	
15	DB5	Data bus Line	
16	DB6	Data bus Line	
17	DB7	Data bus Line	
18	FS	Font Selection	
19	LED+	Power Supply for BKL	5.0V
20	LED-	Power Supply for BKL	

MIDAS DISPLAYS

Block Diagram

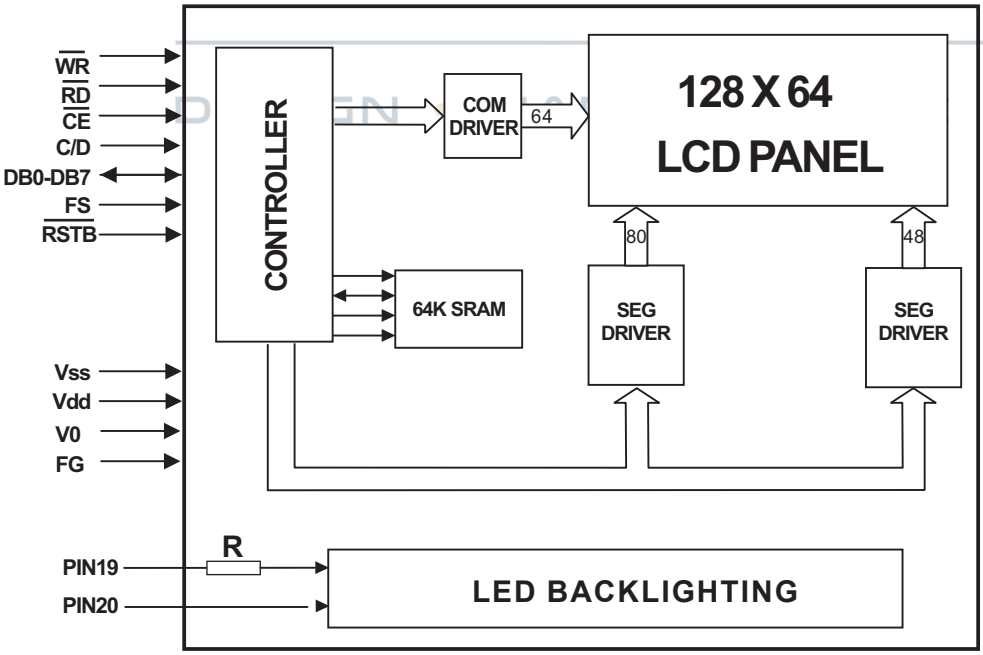

Power Supply Diagram

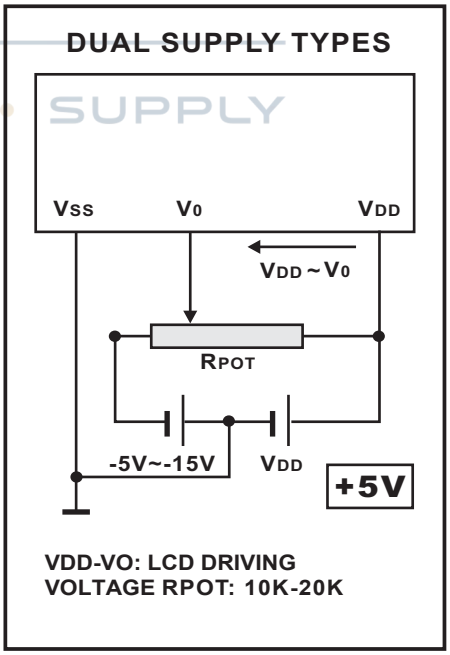

MC128064E6W-SPTLY-V2	128 x 64	Font Set	LCD Module
Specification			
Version: 1		Date: 31/10/2016	
Revision			

Font Map

ROM Code 0101

LSB / MSB	0	1	2	3	4	5	6	7	8	9	A	B	C	D	E	F
0	CG	RAM	(1)	CG	RAM	(2)	CG	RAM	(3)	CG	RAM	(4)	CG	RAM	(5)	CG
1	RAM	(6)	CG	RAM	(7)	CG	RAM	(8)	CG	RAM	(9)	CG	RAM	(10)	CG	RAM
2	(11)	CG	RAM	(12)	CG	RAM	(13)	CG	RAM	(14)	CG	RAM	(15)	CG	RAM	(16)
3	CG	RAM	(17)	CG	RAM	(18)	CG	RAM	(19)	CG	RAM	(20)	CG	RAM	(21)	CG
4	RAM	(22)	CG	RAM	(23)	CG	RAM	(24)	CG	RAM	(25)	CG	RAM	(26)	CG	RAM
5	(27)	CG	RAM	(28)	CG	RAM	(29)	CG	RAM	(30)	CG	RAM	(31)	CG	RAM	(32)
6	CG	RAM	(33)	CG	RAM	(34)	CG	RAM	(35)	CG	RAM	(36)	CG	RAM	(37)	CG
7	RAM	(38)	CG	RAM	(39)	CG	RAM	(40)	CG	RAM	(41)	CG	RAM	(42)	CG	RAM

DESIGN • MANUFACTURE • SUPPLY

Absolute Maximum Ratings

Item	Symbol	Condition	Min	Typ	Max	Unit
Power Supply (LOGIC)	Vdd	25°C	-0.3	---	7.0	V
Power Supply (LCD)	V0	25°C	Vdd -19.00	---	Vdd +0.3	V
Input Voltage	Vin	25°C	-0.3	---	Vdd +0.3	V
Operating Temperature	Vopr	---	-20	---	70	C
Storage Temperature	Vstg	---	-30	---	80	C

Electronic Characteristics

Item	Symbol	Condition	Min	Typ	Max	Unit
Input Voltage	Vlcm = Vdd	---	---	5.0	---	V
Supply Current	Idd	Vdd=5V	---	12.0	---	mA
Driving Voltage for LCD Panel	Vlcd = (Vdd - V0)	-20°C	8.80	---	9.10	V
		0°C	---	---	---	
		25°C	8.70	8.90	9.10	
		50°C	---	---	---	
		70°C	8.50	---	9.00	

LCD Characteristics

For STN/FSTN LCD Panel Types

Item	Symbol	Condition	Min	Typ	Max	Unit
Viewing Angle	Φ2 – Φ1	K = 4	40°	---	---	Deg
	Θ		60°			
Contrast Ratio	K	---	---	10	---	---
Response Time (Rise)	TR	---	---	150	250	ms
Response Time (Fall)	TF	---	---	150	250	ms

MIDAS DISPLAYS
DESIGN • MANUFACTURE • SUPPLY

LED Characteristics

Item	Symbol	Condition	Min	Typ	Max	Unit
LED Forward Voltage	Vf	25°C If=10mA	---	5.0	---	V
LED Forward Current*	If	25°C	---	10	---	mA
LED Reverse Current	Ir	25°C Vr=5.0V	---	---	20	μA
LED Peak Wave Length	λp	25°C If=10mA	569	---	575	nm
LED Brightness (Without LCD)	Lv	25°C If=10mA	---	180	---	cd/m^2
LED Brightness Uniformity	Lvmin/Lvmax	25°C If=10mA	70	---	---	Ratio
LED Life Time		25°C If=10mA	20K	---	---	Hours

Attention: It is constant current, not constant voltage, which should be applied when driving the LED backlight, please ensure you adhere to this rule.