MS6-LFM-...-A
Micro filter

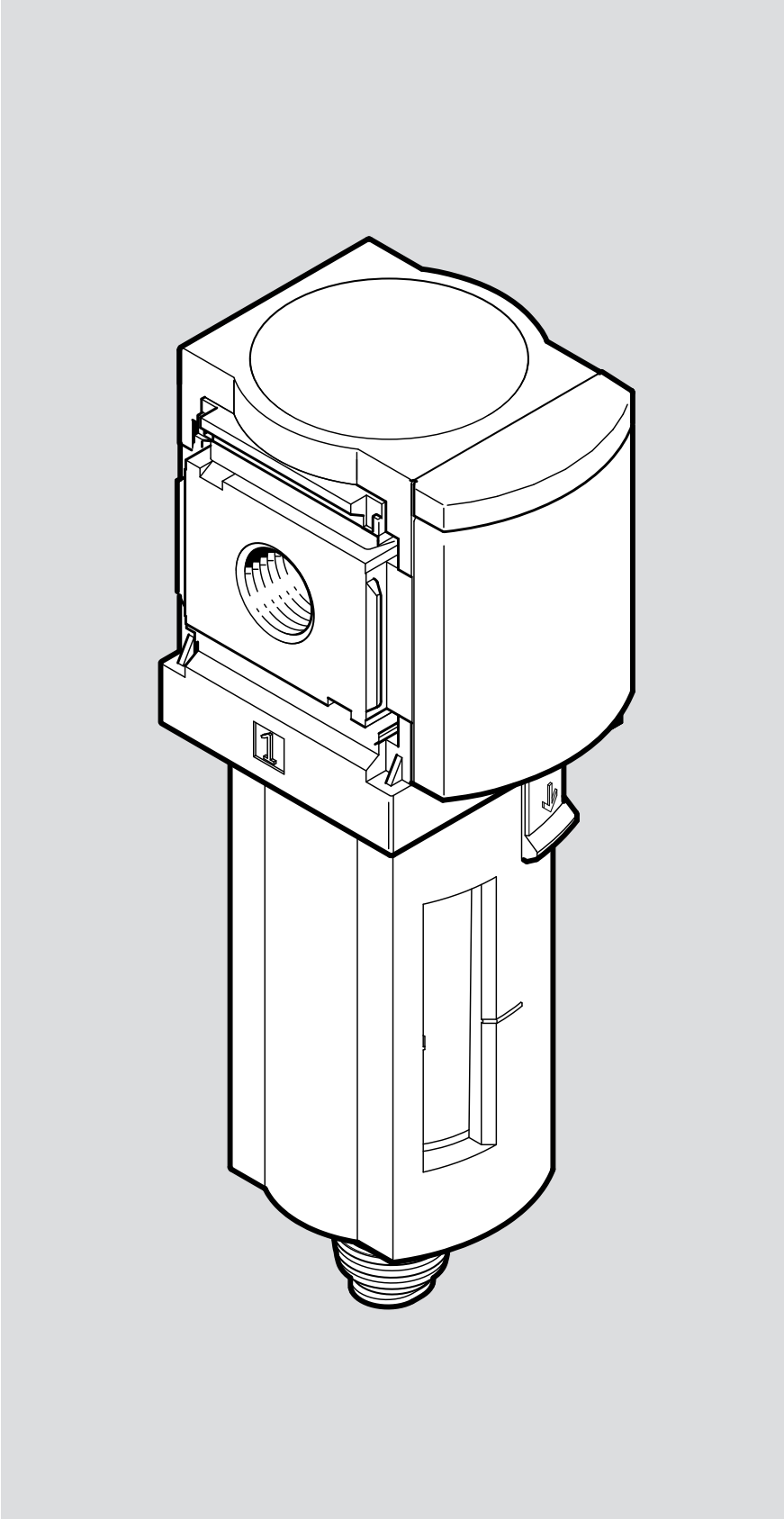

FESTO

Operating instruction

8206808

8206808
2025-03d
[8206810]

Original instructions

Table of contents

1 Applicable documents . . . 5

2 Safety . . . 5
2.1 Safety instructions . . . 5
2.2 Intended use . . . 5
2.3 Training of qualified personnel . . . 5

3 Additional information . . . 5

4 Product design . . . 6

5 Mounting . . . 6

6 Installation . . . 6

7 Commissioning . . . 6

8 Maintenance . . . 7
8.1 Draining condensate . . . 7
8.2 Changing filter . . . 7
8.3 Cleaning . . . 7

9 Fault clearance . . . 8

10 Technical data . . . 8
10.1 Technical data, general . . . 8
10.2 Technical data, pneumatic . . . 9

1 Applicable documents

All available documents for the product ➔ www.festo.com/sp.

2 Safety

2.1 Safety instructions

- Only use the product in its original condition without unauthorised modifications.
- Only use the product if it is in perfect technical condition.
- Observe the identifications on the product.
- Store the product in a cool, dry environment protected from UV and corrosion. Keep storage times short.
- Take into account the ambient conditions at the location of use.
- Before working on the product, switch off the compressed air supply and lock it to prevent it from being switched on again.
- Use only media to which the materials used for the product are resistant. For evaluation of the media resistance ➔ www.festo.com/sp.

2.2 Intended use

The micro filter removes dirt particles and condensate from the compressed air.

2.3 Training of qualified personnel

Work on the product may only be carried out by qualified personnel who can evaluate the work and detect dangers. The qualified personnel have knowledge and experience in pneumatics.

3 Additional information

- Contact the regional Festo contact if you have technical problems ➔ www.festo.com.
- Accessories and spare parts ➔ www.festo.com/catalogue.

4 Product design

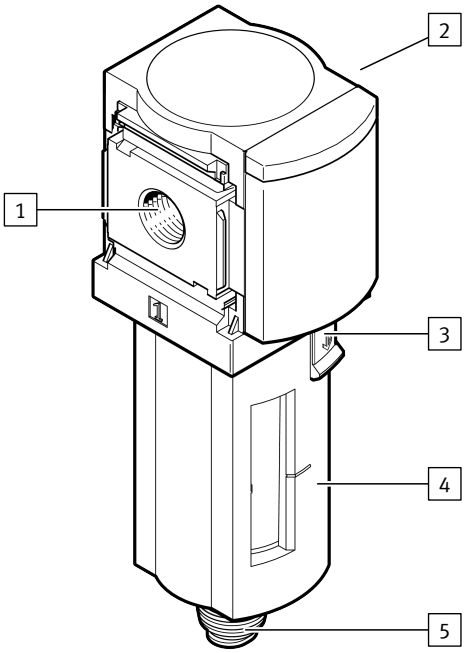

1 Pneumatic port 1
2 Pneumatic port 2
3 Release button
4 Filter bowl
5 Drain screw, drain button

Fig. 1: Product design

5 Mounting

Wall mounting

Requirements:
- Space required above the product: ≥ 30 mm
- Space required under the product: ≥ 100 mm
- Shut-off valves are installed in the compressed air supply line.

1. Align the product vertically in the flow direction from 1 to 2. The numbers on the housing are provided for orientation.
2. Mount the product on the mounting surface with the mounting accessories ➔ 3 Additional information.

6 Installation

1. Use fittings, seals and suitable tubing from the Festo catalogue ➔ 3 Additional information.
2. Remove potential dirt particles in the supply lines by blowing out the pipes and hoses. This protects the product from premature failure or higher wear.
3. Screw the fittings into the pneumatic ports.
4. Insert suitable tubing into the fitting to the stop.
   - Position the tubing axial to the pneumatic ports.

7 Commissioning

- Slowly pressurise the system.
  - Observe the permissible pressure ranges ➔ 10.2 Technical data, pneumatic. The input pressure p1 should always be at least 0.05 MPa (0.5 bar; 7.3 psi) higher than the set output pressure p2.

8 Maintenance

8.1 Draining condensate

With MS6-LFM-...-A-M

If the condensate reaches a level approx. 10 mm below the filter element:

1. Turn the drain screw anticlockwise as seen from below.
   ⇨ The condensate is drained.
2. Turn the drain screw clockwise as seen from below.

With MS6-LFM-...-AH

Option 1:

- Briefly exhaust the product.
  ⇨ The condensate drains automatically.

Option 2:

1. Turn the drain screw anticlockwise as seen from below.
   ⇨ The condensate is drained.
2. Turn the drain screw clockwise as seen from below.

With MS6-LFM-...-AV/-VC

The product drains automatically.
The condensate can also be drained manually.

- Press the drain push button from bottom to top.
  ⇨ The condensate is drained.

With MS6-LFM-...-AE...

The product drains automatically ➔ Operating instructions for condensate drain PWEA-AC/-AP.

8.2 Changing filter

Replace the filter cartridge if the flow rate is reduced even though the pressure setting is unchanged.

1. Exhaust the product.
2. Pull down the release button on the filter bowl.
3. Turn the filter bowl anticlockwise (as seen from below) until the stop can be felt.
4. Remove the filter bowl from the housing.
5. Unscrew the filter anticlockwise.
6. Hold the new filter at the bottom and screw it into the housing clockwise.
   Maximum tightening torque: 2.5 Nm
7. Mount the filter bowl:
   – Align the release button of the filter bowl with the cutout on the housing and insert it.
   – Turn the filter bowl clockwise until the lock audibly engages at the stop.

8.3 Cleaning

- Clean the outside of the product as required with a soft cloth.
  Permissible cleaning agents:
  – Soap solution, maximum +60 °C
  – Petroleum ether, free of aromatic compounds

9 Fault clearance

Malfunction	Cause	Remedy
Low flow rate. The operating pressure drops with air consumption.	The compressed air supply line is constricted.	– Check the compressed air supply line.
	The filter cartridge is dirty.	– Replace the filter cartridge.
Audible leakage at the condensate drain.	The condensate drain is leaking.	– Replace the product.

Tab. 1: Fault clearance

10 Technical data

10.1 Technical data, general

MS6-LFM-...-A		-M	-H	-V/-VC	-E...
Certificates, declaration of conformity		➔ www.festo.com/sp			
Mounting position	[°]	Vertical ± 5			
Condensate drain function		Manual rotating	Semi-automatic	Fully automatic, mechanical	Fully automatic, electric
Grade of filtration	[µm]	0.01			
Storage temperature	[°C]	–10 ... +60			+1 ... +60
Temperature of medium[1)]	[°C]	–10 ... +60			+1 ... +60
Ambient temperature	[°C]	–10 ... +60			+1 ... +60
Pneumatic port 1					
MS6-LFM-1/4-A		G 1/4			
MS6-LFM-3/8-A		G 3/8			
MS6-LFM-1/2-A		G 1/2			
MS6-LFM-AGB-A		G 1/4			
MS6-LFM-AGC-A		G 3/8			
MS6-LFM-AGD-A		G 1/2			
MS6-LFM-AGE-A		G 3/4			
Pneumatic port 2					
MS6-LFM-1/4-A		G 1/4			
MS6-LFM-3/8-A		G 3/8			
MS6-LFM-1/2-A		G 1/2			
MS6-LFM-AGB-A		G 1/4			
MS6-LFM-AGC-A		G 3/8			
MS6-LFM-AGD-A		G 1/2			
MS6-LFM-AGE-A		G 3/4			

1) When using products with condensate drain, the operating medium must have a pressure dew point of ≤ –10 °C.

Tab. 2: Technical data, general

10.2 Technical data, pneumatic

MS6-LFM-...-A		-M	-H	-V/-VC	-E...
Operating medium		Compressed air to ISO 8573-1:2010 [6:4:4][1)]			
		Inert gases			
Information on the operating medium		Not compatible with ester oil			
Operating pressure	[MPa]	0 ... 2	0.15 ... 1.2	0.2 ... 1.2	0.08 ... 1.6
	[bar]	0 ... 20	1.5 ... 12	2 ... 12	0.8 ... 16
	[psi]	0 ... 290	21.75 ... 174	29 ... 174	11.6 ... 232

1) We recommend pre-filtering the compressed air for the MS6-LFM-...-A micro filter with a MS6-LFM-...-B fine filter (filter fineness 1 µm).

Tab. 3: Technical data, pneumatic

Festo SE & Co. KG
Ruiter Straße 82
73734 Esslingen
Germany

Phone: +49 711 347-0
www.festo.com

© 2025 all rights reserved to Festo SE & Co. KG