SKYPER 42 R

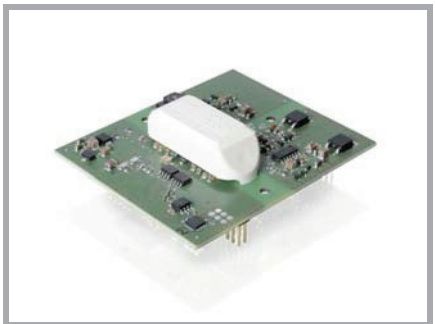

SKYPER®

IGBT Driver Core

SKYPER 42 R

Preliminary Data

Features

- Two output channels
- Integrated potential free power supply
- Under voltage protection
- Drive interlock top / bottom
- Dynamic short cirucit protection
- Shut down input
- Failure management
- IEC 60068-1 (climate) 40/085/56, no condensation and no dripping water permitted, non-corrosive, climate class 3K3 acc. EN60721

Typical Applications*

- Driver for IGBT modules in bridge circuits in industrial application
- DC bus voltage up to 1200V

Footnotes

Isolation test voltage with external high voltage diode
The isolation test is not performed as a series test at SEMIKRON
The driver power can be expanded to 50µC with external boost capacitors

Isolation coordination in compliance with EN50178 PD2
Operating temperature is real ambient temperature around the driver core
Degree of protection: IP00

Driver Core

Absolute Maximum Ratings

Symbol	Conditions	Values	Unit
V_s	Supply voltage primary	16	V
V_{iH}	Input signal voltage (HIGH)	Vs + 0.3	V
V_{iL}	Input signal voltage (LOW)	GND - 0.3	V
$Iout_{PEAK}$	Output peak current	30	A
$Iout_{AVmax}$	Output average current	150	mA
f_{max}	Max. switching frequency	100	kHz
V_{CE}	Collector emitter voltage sense across the IGBT	1700	V
dv/dt	Rate of rise and fall of voltage secondary to primary side	100	kV/µs
$V_{isol\ IO}$	Isolation test voltage input - output (AC, rms, 2s)	4000	V
V_{isolPD}	Partial discharge extinction voltage, rms, $Q_{PD} \leq 10pC$	1500	V
V_{isol12}	Isolation test voltage output 1 - output 2 (AC, rms, 2s)	1500	V
$R_{Gon\ min}$	Minimum rating for external R_{Gon}	0.8	Ω
$R_{Goff\ min}$	Minimum rating for external R_{Goff}	0.8	Ω
$Q_{out/pulse}$	Max. rating for output charge per pulse	50	µC
T_{op}	Operating temperature	-40 ... 85	°C
T_{stg}	Storage temperature	-40 ... 85	°C

Characteristics

Symbol	Conditions	min.	typ.	max.	Unit
V_s	Supply voltage primary side	14.4	15	15.6	V
I_{SO}	Supply current primary (no load)		125		mA
	Supply current primary side (max.)			800	mA
V_i	Input signal voltage on / off		15 / 0		V
V_{IT+}	Input treshold voltage HIGH			12.3	V
V_{IT-}	Input threshold voltage (LOW)	4.6			V
R_{IN}	Input resistance (switching/HALT signal)		10		kΩ
$V_{G(on)}$	Turn on output voltage		15		V
$V_{G(off)}$	Turn off output voltage		-8		V
f_{ASIC}	Asic system switching frequency		8		MHz
$t_{d(on)IO}$	Input-output turn-on propagation time		1.1		µs
$t_{d(off)IO}$	Input-output turn-off propagation time		1.1		µs
$t_{d(err)}$	Error input-output propagation time		2.3		µs
$t_{pERRRESET}$	Error reset time		9		µs
t_{TD}	Top-Bot interlock dead time		2		µs
C_{ps}	Coupling capacitance prim sec		3		pF
w	weight				g
MTBF			2.1		10^6h

This is an electrostatic discharge sensitive device (ESDS), international standard IEC 60747-1, Chapter IX

* The specifications of our components may not be considered as an assurance of component characteristics. Components have to be tested for the respective application. Adjustments may be necessary. The use of SEMIKRON products in life support appliances and systems is subject to prior specification and written approval by SEMIKRON. We therefore strongly recommend prior consultation of our staff.

Technical Explanations

Revision 05
Status: preliminary
Prepared by: Johannes Krapp

This Technical Explanation is valid for the following parts:

part number:	*L5054301*
date code (YYWW):	>CW16

Related Documents:

title:	*Data Sheet SKYPER 42 R*

SKYPER® 42 R

Content

1. Introduction ... 2

2. Application and Handling Instructions ... 3
2.1. General Instructions ... 3
2.2. Mechanical Instructions ... 3

3. Driver Interface ... 5
3.1. Controller Interface – Primary Side Pinning ... 5
3.2. Controller Interface – Primary Side Connection ... 6
3.3. Module interface – Secondary Side ... 7
3.4. Module interface – Secondary Side Connection ... 8
3.5. Power supply - Primary ... 9
3.6. Gate driver signals – Primary ... 9
3.7. Shut Down Input (SDI) - Primary ... 10
3.8. Gate resistors - Secondary ... 10
3.9. External Boost Capacitors (BC) -Secondary ... 11

4. Protection features ... 11
4.1. Failure Management ... 11
4.2. Under Voltage Protection of driver power supply (UVP) ... 12
4.3. Short Pulse Suppression (SPS) ... 12
4.4. Dead Time generation (Interlock TOP / BOT) (DT) ... 12
4.5. Dynamic Short Circuit Protection by VCEsat monitoring (DSCP) ... 13

5. Electrical Characteristic ... 15
5.1. Driver Performance ... 15
5.2. Insulation ... 15

6. Environmental Conditions ... 16

7. Marking ... 17

 © by SEMIKRON

Please note:
Unless otherwise specified, all values in this technical explanation are typical values. Typical values are the average values expected in large quantities and are provided for information purposes only. These values can and do vary in different applications. All operating parameters should be validated by user's technical experts for each application.

1. Introduction

The SKYPER 42 core constitutes an interface between IGBT modules and the controller. This core is a half bridge driver. Basic functions for driving, potential separation and protection are integrated in the driver. Thus it can be used to build up a driver solution for IGBT modules. SKYPER 42 R is developed for systems in the power range of 1 MVA – 8 MVA.

- Two output channels
- Up to 50 µC gate charge
- Integrated potential free power supply for the secondary side
- Short Pulse Suppression (SPS)
- Under Voltage Protection (UVP)
- Drive interlock (dead time) top / bottom (DT)
- Dynamic Short Circuit Protection (DSCP) by V_{CE} monitoring and direct switch off
- Shut Down Input (SDI)
- Failure Management
- Expandable by External Boost Capacitors (BC)
- DC bus voltage up to 1200V

SKYPER 42 R

Block diagram of SKYPER 42 R

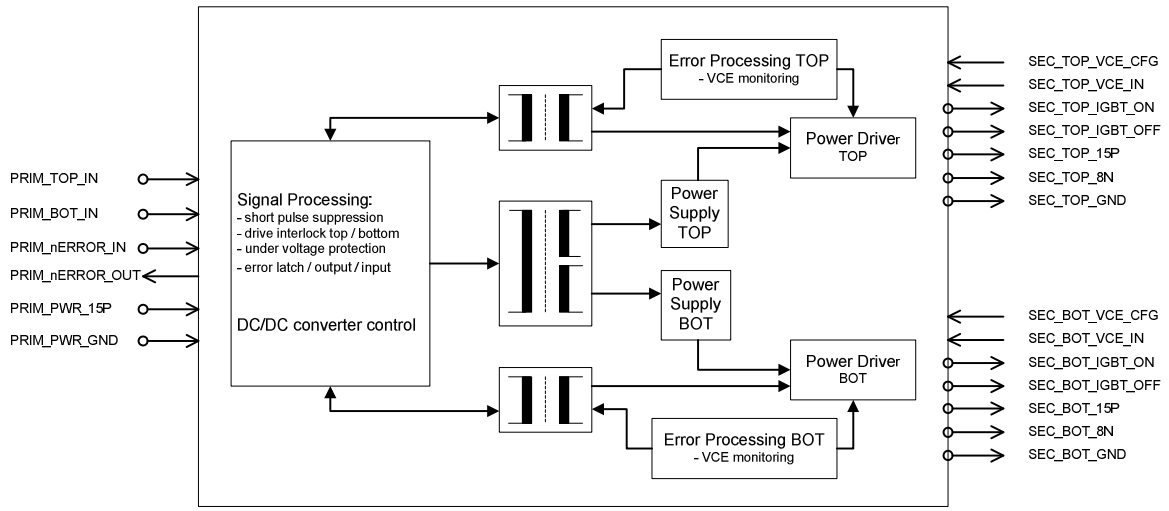

 © by SEMIKRON

2. Application and Handling Instructions

2.1. General Instructions

- Please provide for static discharge protection during handling. As long as the driver is not completely assembled, the input terminals have to be short-circuited. Persons working with devices have to wear a grounded bracelet. Any synthetic floor coverings must not be statically chargeable. Even during transportation the input terminals have to be short-circuited using, for example, conductive rubber. Worktables have to be grounded. The same safety requirements apply to MOSFET- and IGBT-modules.
- When first operating a newly developed circuit, SEMIKRON recommends to apply low collector voltage and load current in the beginning and to increase these values gradually, observing the turn-off behaviour of the free-wheeling diode and the turn-off voltage spikes generated across the IGBT. An oscillographic control will be necessary. Additionally, the case temperature of the module has to be monitored. When the circuit works correctly under rated operation conditions, short-circuit testing may be done, starting again with low collector voltage.

2.2. Mechanical Instructions

Dimensions – 69 x 80 x 19 + Holes – bottom view

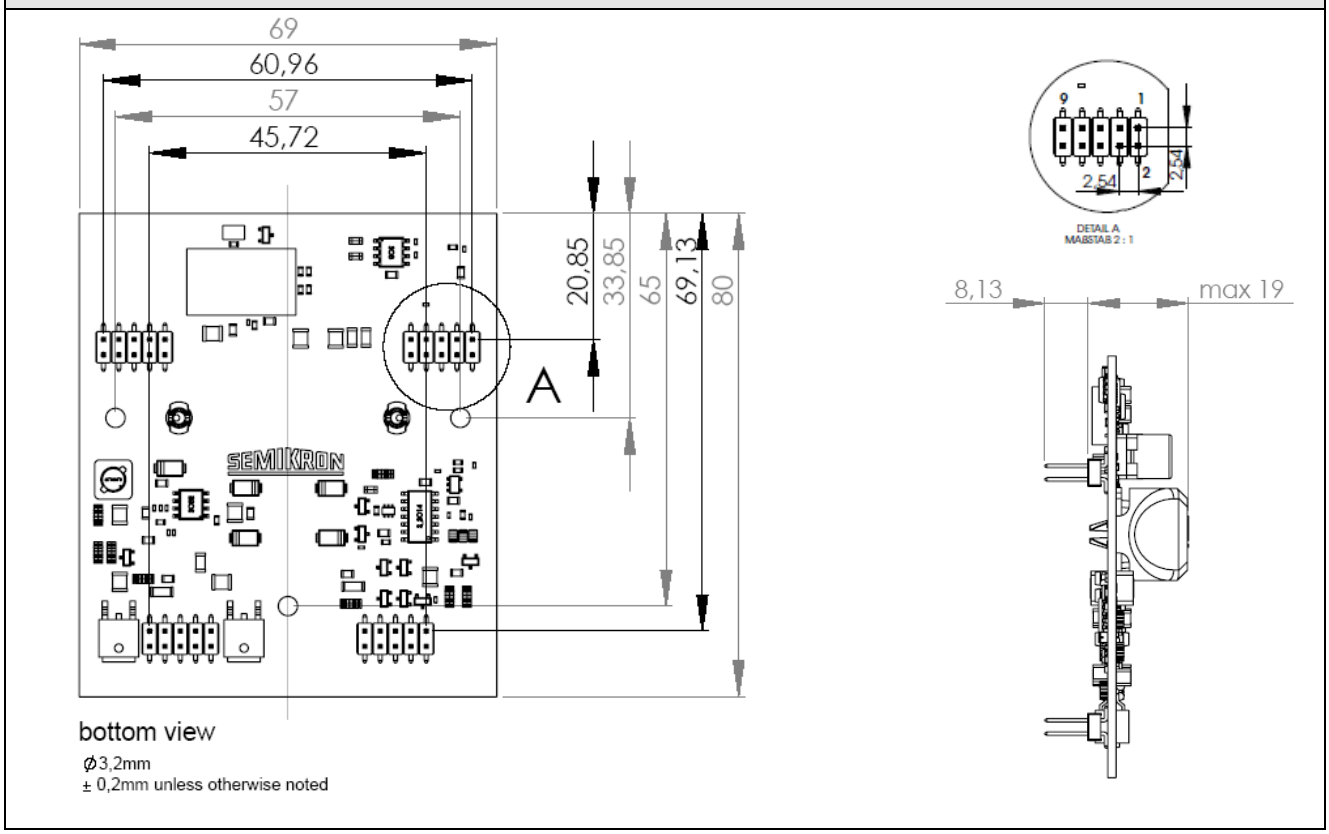

 © by SEMIKRON

- For integrating the SKYPER 42 R driver core in to an inverter system an adaptor board has to be built. SEMIKRON offers a wide range of adaptor boards, e.g. for SEMiX, Semitrans or SKiM modules. SEMIKRON offers in addition a customer specific adaptor board on demand. Please contact your responsible sales for further information.

Adaptor boards for SKYPER 42 R

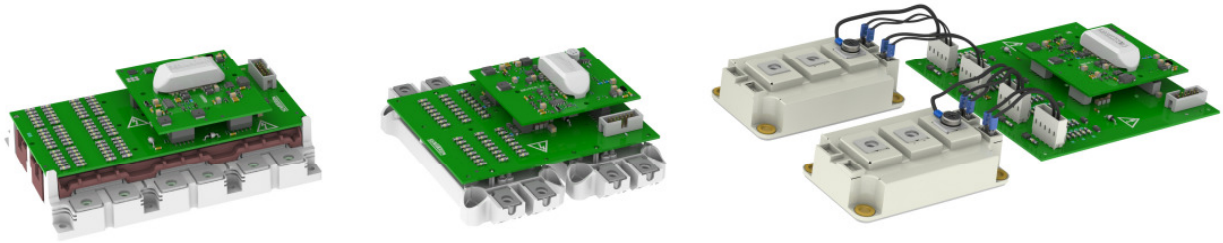

- SKYPER 42 R can be plugged or soldered on the adaptor board.

Soldering Hints

- The temperature of the solder must not exceed 260°C, and solder time must not exceed 10 seconds.
- The ambient temperature must not exceed the specified maximum storage temperature of the driver.
- The solder joints should be in accordance to IPC A 610 Revision D (or later) - Class 3 (Acceptability of Electronic Assemblies) to ensure an optimal connection between driver core and printed circuit board.
- The driver is not suited for hot air reflow or infrared reflow processes.

Use of Support Posts

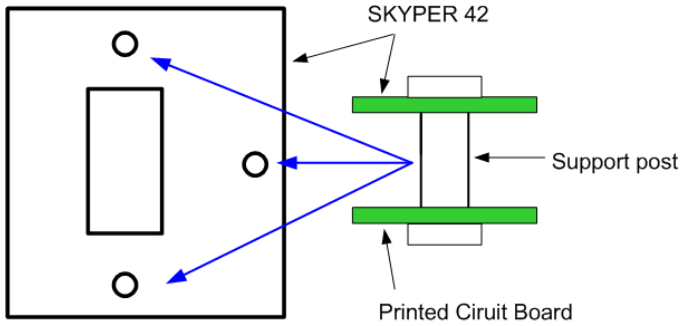

The connection between driver core and printed circuit board should be mechanical reinforced by using support posts.

The driver board has got three holes for supports posts.
Using support posts with external screw thread improves mechanical assembly.

Product information of suitable support posts and distributor contact information is available at e.g. http://www.richco-inc.com or http://www.ettinger.de.

 © by SEMIKRON

3. Driver Interface

3.1. Controller Interface – Primary Side Pinning

Connectors	Connector X10, X11 (RM2,54, 10pin)
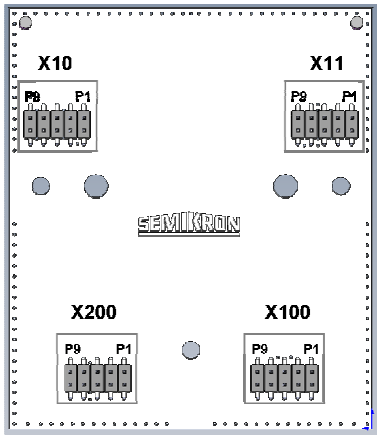	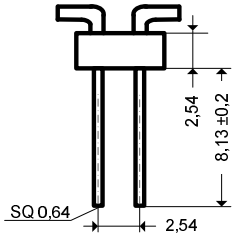 ±0,25mm unless otherwise noted

PIN	Signal	Function	Specification
X10:01	Reserved		
X10:02	Reserved		
X10:03	PRIM_nERROR_OUT	ERROR output	LOW = NO ERROR; open collector output; max. 30V / 15mA (external pull up resistor necessary)
X10:04	PRIM_nERROR_IN	ERROR input	5V logic; LOW active; High Max = 3,8V; Low Min = 1,5V;
X10:05	PRIM_PWR_GND	GND for power supply and GND for digital signals	
X10:06	PRIM_PWR_GND	GND for power supply and GND for digital signals	
X10:07	PRIM_TOP_IN	Switching signal input (TOP switch)	Digital 15 V; 10 kOhm impedance; LOW = TOP switch off; HIGH = TOP switch on
X10:08	PRIM_BOT_IN	Switching signal input (BOTTOM switch)	Digital 15 V; 10 kOhm impedance; LOW = BOT switch off; HIGH = BOT switch on
X10:09	PRIM_PWR_15P	Drive core power supply	Stabilised +15V ±4%
X10:10	PRIM_PWR_15P	Drive core power supply	Stabilised +15V ±4%
X11:01, 02, 05-08	Reserved		
X11:03, 04,09,10	PRIM_PWR_GND	GND for power supply and GND for digital signals	

 © by SEMIKRON

3.2. Controller Interface – Primary Side Connection

Application example

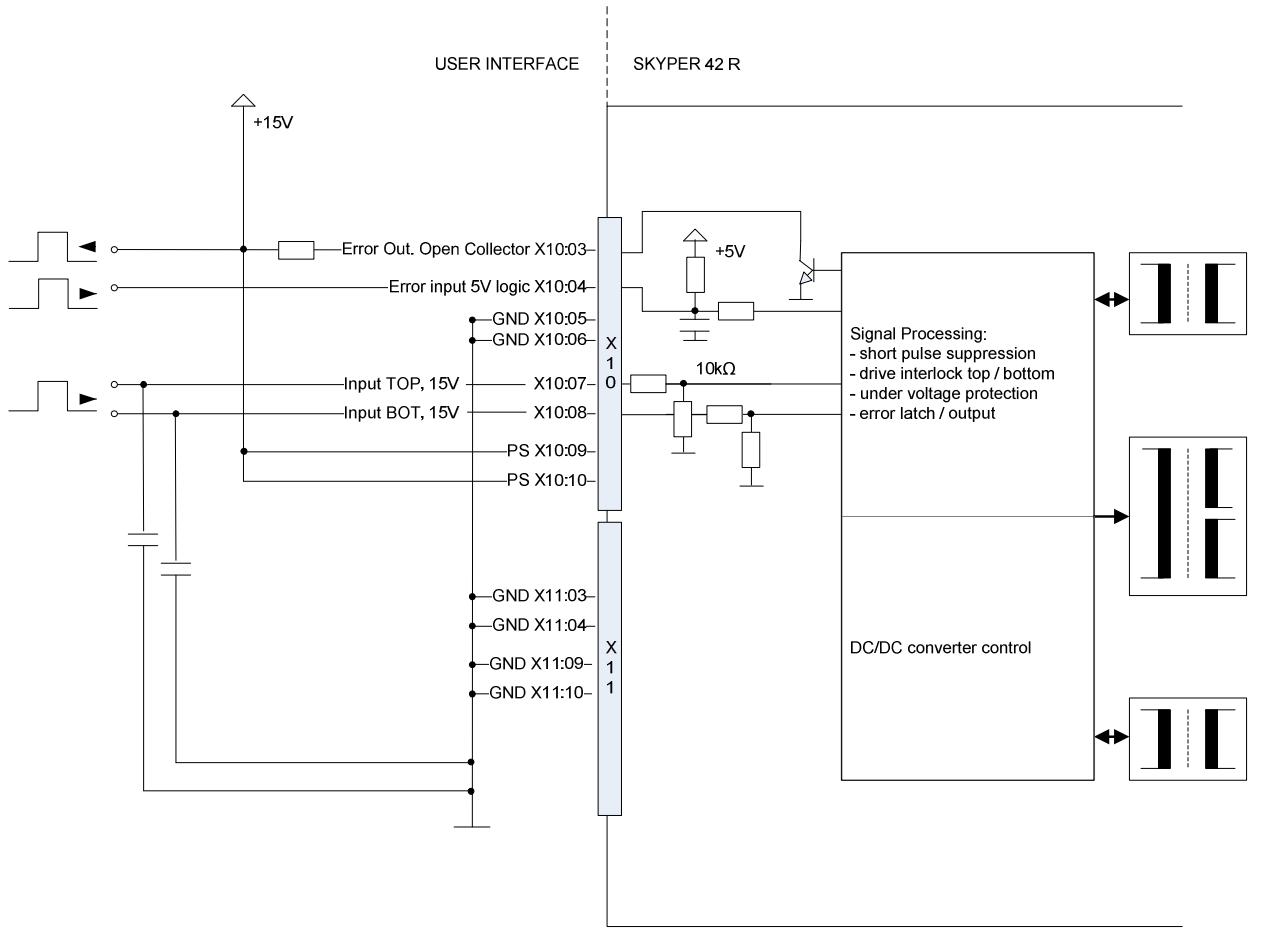

Pins X10:01-02 and X11:01-02; X11:05-08 are reserved. Do not connect. Non binding recommendation for: R_{ERROR}=4,75kΩ; C_{FILTER}=1nF.

- A capacitor is connected to the input of the gate driver to obtain high noise immunity. With current limited line drivers, this capacitor can cause a small delay of a few ns. The capacitors have to be placed as close to the gate driver interface as possible.
- Signal cable should be placed as far away as possible from power terminals, power cables, ground cables, DC-link capacitors and all other noise sources.
- Control signal cable should not run parallel to power cable. The minimum distance between control signal cable and power cable should be 30cm and the cables should cross vertically only.
- It is recommended that all cables be kept close to ground (e.g. heat sink or the likes).
- In noise intensive applications, it is recommended that shielded cables or fibre optic interfaces be used to improve noise immunity.
- Use a low value capacitor (1nF) between signal and power supply ground of the gate driver for differential-mode noise suppression.

3.3. Module interface – Secondary Side

Connectors	Connector X100 / X200 (RM2,54, 10pin)
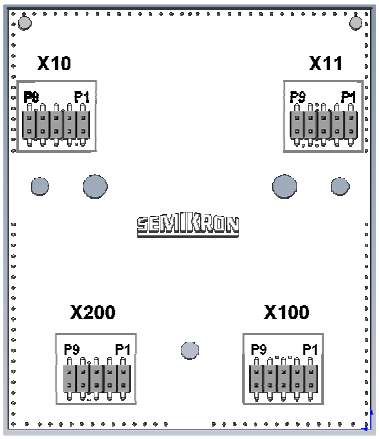	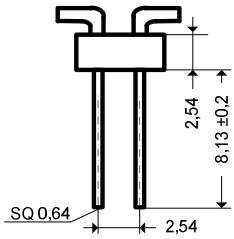 ±0,25mm unless otherwise noted

PIN	Signal	Function	Specification
X100:01	SEC_TOP_VCE_CFG	Input reference voltage adjustment for Vce monitoring TOP	
X100:02	SEC_TOP_VCE_IN	Input V_{CE} monitoring TOP	
X100:03	SEC_TOP_15P	Output power supply for external buffer capacitors	Stabilised +15V
X100:04	SEC_TOP_15P	Output power supply for external buffer capacitors	Stabilised +15V
X100:05	SEC_TOP_GND	GND for power supply and GND for digital signals	
X100:06	SEC_TOP_IGBT_ON	Switch on signal TOP IGBT	
X100:07	SEC_TOP_GND	GND for power supply and GND for digital signals	
X100:08	SEC_TOP_IGBT_OFF	Switch off signal TOP IGBT	
X100:09	SEC_TOP_8N	Output power supply for external buffer capacitors	Stabilised -7V
X100:10	SEC_TOP_8N	Output power supply for external buffer capacitors	Stabilised -7V
X200:01	SEC_BOT_VCE_CFG	Input reference voltage adjustment for Vce monitoring BOT	
X200:02	SEC_BOT_VCE_IN	Input V_{CE} monitoring BOT	
X200:03	SEC_BOT_15P	Output power supply for external buffer capacitors	Stabilised +15V
X200:04	SEC_BOT_15P	Output power supply for external buffer capacitors	Stabilised +15V
X200:05	SEC_BOT_GND	GND for power supply and GND for digital signals	
X200:06	SEC_BOT_IGBT_ON	Switch on signal BOT IGBT	
X200:07	SEC_BOT_GND	GND for power supply and GND for digital signals	
X200:08	SEC_BOT_IGBT_OFF	Switch off signal BOT IGBT	
X200:09	SEC_BOT_8N	Output power supply for external buffer capacitors	Stabilised -7V
X200:10	SEC_BOT_8N	Output power supply for external buffer capacitors	Stabilised -7V

 © by SEMIKRON

3.4. Module interface – Secondary Side Connection

Application example

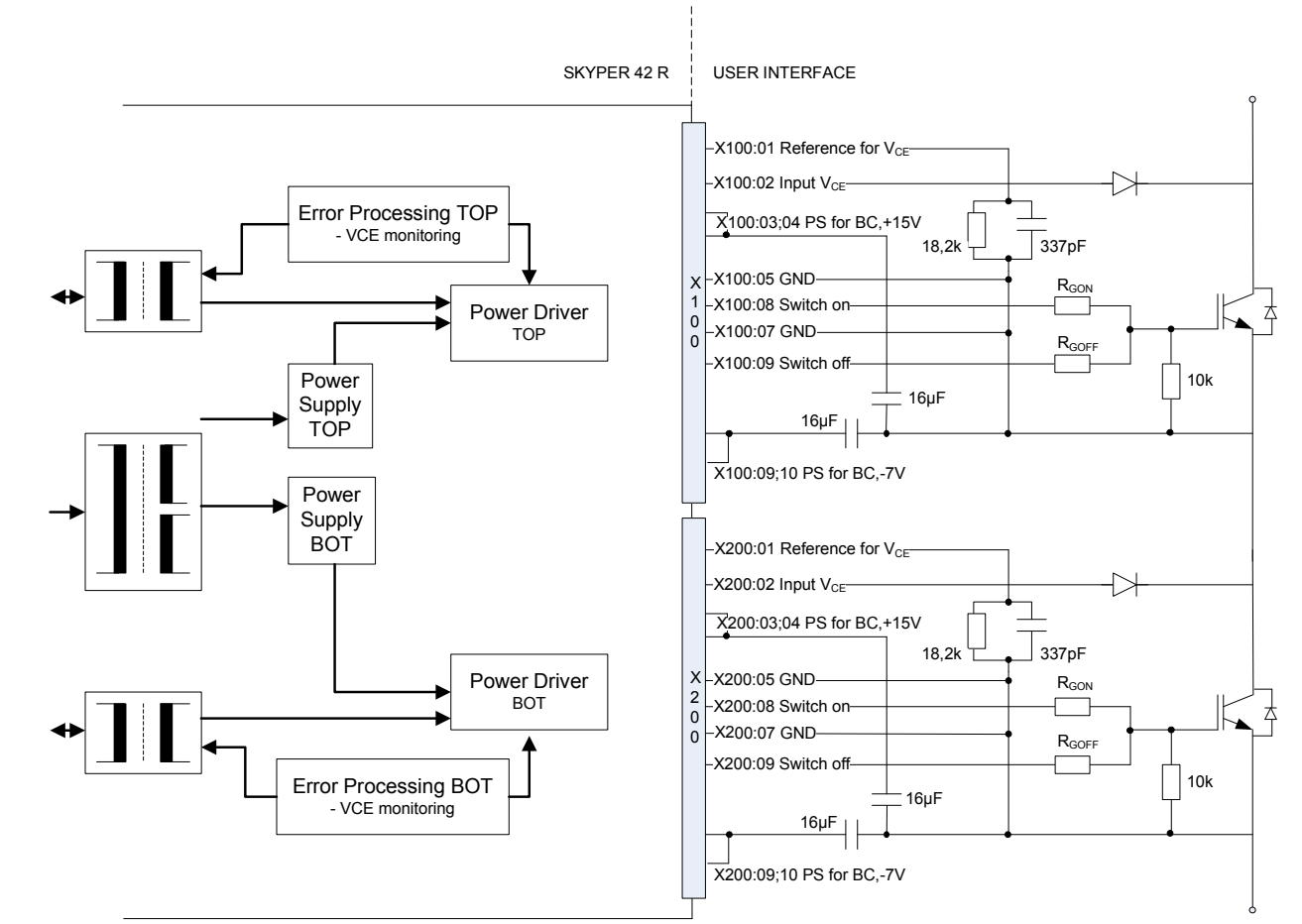

Application example for 1200V IGBT, V_{CEref}=6,7V, t_{BL}=2,3µs, $Q_{out/pulse}$ = 4µC.

- Any parasitic inductances within the DC-link have to be minimized. Overvoltages may be absorbed by C- or RCD-snubbers between main terminals (plus and minus) of the power module.
- Make power patterns short and thick to reduce stray inductance and stray resistance.
- The connecting leads between gate driver and IGBT module must be kept as short as possible (max. 20cm).
- Gate wiring for top and bottom IGBT or other phases must not be bundled together.
- It is recommended that a 10kΩ resistor (RGE) be placed between the gate and emitter. If wire connection is used, do not place the RGE between printed circuit board and IGBT module. RGE has to be placed very close to the IGBT module.
- Use a suppressor diode (back-to-back Zener diode) between gate and emitter. The diode has to be placed very close to the IGBT module.
- The use of a capacitor (CGE) between gate and emitter can be advantageous, even for high-power IGBT modules and parallel operation. The CGE should be approximately 10% of the CGE of the IGBT used. The CGE has to be placed very close to the IGBT module.
- Current loops must be avoided.
- External boost capacitors must be placed as close to the gate driver as possible in order to minimize parasitic inductance.

3.5. Power supply - Primary

Requirements of the auxiliary power supply	
Regulated power supply	+15V ±4%
Maximum rise time of auxiliary power supply	150ms
Power on reset completed after	56ms

Please note:
Do not apply switching signals during power on reset.

- The same power supply used for SKYPER 32 can be taken
- The supplying switched mode power supply may not be turned-off for a short time as consequence of its current limitation. Its output characteristic needs to be considered. Switched mode power supplies with fold-back characteristic or hiccup-mode can create problems if no sufficient over current margin is available. The voltage has to rise continuously.
- If the power supply is able to provide a higher current, a peak current will flow in the first instant to charge up the input capacitances on the driver. Its peak current value will be limited by the power supply and the effective impedances (e.g. distribution lines), only.
- The driver error signal PRIM_nERROR_OUT is operational after 56ms. Without any error present, the error signal will be reset.
- To assure a high level of system safety the TOP and BOT signal inputs should stay in a defined state (OFF state, LOW) during driver turn-on time. Only after the end of the power-on-reset, IGBT switching operation shall be permitted.

3.6. Gate driver signals – Primary

The signal transfer to each IGBT is made with pulse transformers, used for switching on and switching off of the IGBT. The inputs have a Schmitt Trigger characteristic and a positive / active high logic (input HIGH = IGBT on; input LOW = IGBT off).

It is mandatory to use circuits which switch active to +15V and 0V. Pull up and open collector output stages must not be used for TOP / BOT control signals. It is recommended choosing the line drivers according to the demanded length of the signal lines. The duty cycle of the driver can be adjusted between 0 – 100%. It is not permitted to apply switching pulses shorter than 1µs.

TOP / BOT Input	
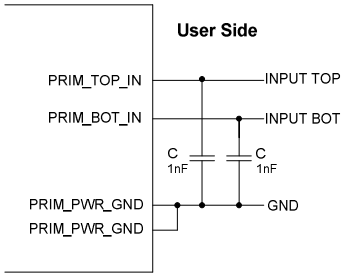	A capacitor is connected to the input to obtain high noise immunity. This capacitor can cause for current limited line drivers a little delay of few ns, which can be neglected. The capacitors have to be placed as close as possible to the driver interface.

3.7. Shut Down Input (SDI) - Primary

The shut down input / error input signal can gather error signals of other hardware components for switching off the IGBT (input HIGH = no turn-off; input LOW = turn-off).

Connection SDI	Hints
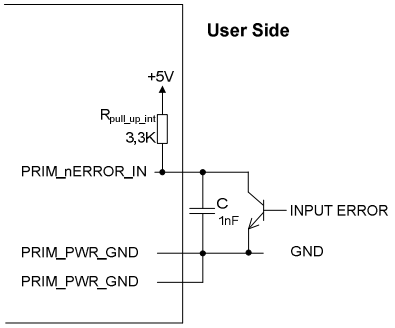	▪ A LOW signal at PRIM_nERROR_IN will set the error latch and force the output PRIM_nERROR_OUT into HIGH state. Switching pulses from the controller will be ignored. ▪ The SDI function can be disabled by no connection or connecting to 5V.

3.8. Gate resistors - Secondary

The output transistors of the driver are MOSFETs. The sources of the MOSFETs are separately connected to external terminals in order to provide setting of the turn-on and turn-off speed of each IGBT by the external resistors R_{Gon} and R_{Goff}. As an IGBT has input capacitance (varying during switching time) which must be charged and discharged, both resistors will dictate what time must be taken to do this. The final value of the resistance is difficult to predict, because it depends on many parameters as DC link voltage, stray inductance of the circuit, switching frequency and type of IGBT.

Connection R_{Gon}, R_{Goff}	Application Hints
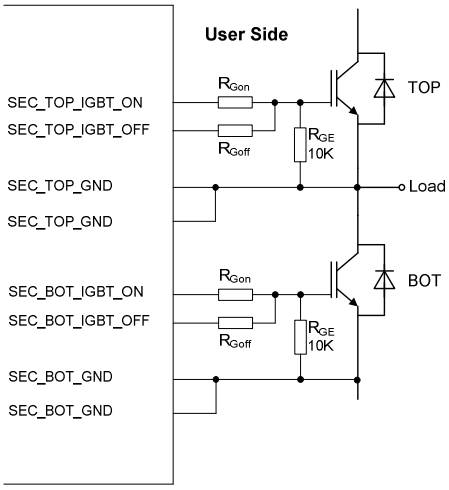	▪ The gate resistor influences the switching time, switching losses, dv/dt behaviour, etc. and has to be selected very carefully. The gate resistor has to be optimized according to the specific application. ▪ By increasing R_{Gon} the turn-on speed will decrease. The reverse peak current of the free-wheeling diode will diminish. ▪ By increasing R_{Goff} the turn-off speed of the IGBT will decrease. The inductive peak over voltage during turn-off will diminish. ▪ In order to ensure locking of the IGBT even when the driver supply voltage is turned off, a resistance (R_{GE}) has to be integrated. ▪ Tpically, IGBT modules with a large current rating will be driven with smaller gate resistors and vice versa. ▪ Te value of gate resistors will be between the value indicated in the IGBT data sheet and roughly twice this value. ▪ In most applications, the turn-on gate resistor RG(on) is ▪ smaller than the turn-off gate resistor RG(off). ▪ Depending on the individual parameters, RG(off) can be roughly twice the RG(on) value. ▪ Place the gate resistances for turn-on and turn-off close together.

Please note:
Do not connect the terminals SEC_TOP_IGBT_ON with SEC_TOP_IGBT_OFF and SEC_BOT_IGBT_ON with SEC_BOT_IGBT_OFF, respectively.

3.9. External Boost Capacitors (BC) -Secondary

The rated gate charge of the driver may be increased by additional boost capacitors to drive IGBT with large gate capacitance.

Connection External Boost Capacitors	Dimensioning of C_{boost}
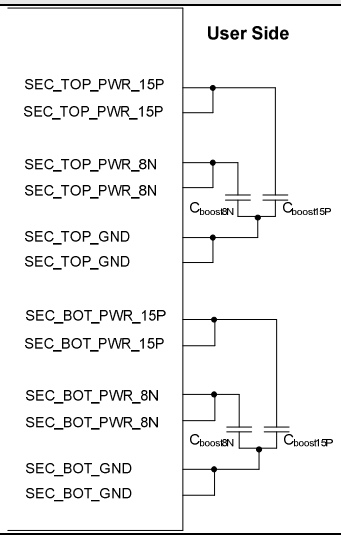	▪ SKYPER 42 R has internal gate capacitors of 2.5 µC ▪ Using external capacitors: **4µF = 1µC** ▪ The boost capacitors on C15 and C-8 should be chosen with the same values ▪ Please consider the maximum rating four output charge per pulse of the gate driver. ▪ The external boost capacitors should be connected as close as possible to the gate driver and to have low inductance.

4. Protection features

4.1. Failure Management

Any error detected will set the error latch and force the output PRIM_nERROR_OUT into HIGH state. Switching pulses from the controller will be ignored. Connected and switched off IGBTs remain turned off. The switched off IGBTs remain turned off.

The output PRIM_nERROR_OUT is an open collector output. For the error evaluation an external pull-up-resistor is necessary pulled-up to the positive operation voltage of the control logic (LOW signal = no error present, wire break safety is assured).

Open collector error transistor	Application hints
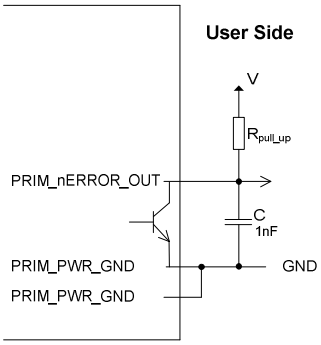	▪ An external resistor to the controller logic high level is required. The resistor has to be in the range of V / I_{max} < R_{pull_up} < 10kΩ. ▪ Rest when TOP/BOT signals set to low for $t_{pERRRESET}$ > 9µs ▪ PRIM_nERROR_OUT can operate to maximum 30V and can switch a maximum of 15mA. ▪ Example: For V = +15V the needed resistor should be in the range R_{pull_up} = (15V/15mA) … 10kΩ ⇒ 1kΩ… 10kΩ.

Please note:
The error output PRIM_ERROR_OUT is not short circuit proof.

4.2. Under Voltage Protection of driver power supply (UVP)

The internally detected supply voltage of the driver has an under voltage protection.

Supply voltage	UVP level
Regulated +15V ±4%	Typ 13,5V

If the internally detected supply voltage of the driver falls below this level, the IGBTs will be switched off (IGBT driving signals set to LOW). The input side switching signals of the driver will be ignored. The error memory will be set, and the output PRIM_nERROR_OUT changes to the HIGH state.

4.3. Short Pulse Suppression (SPS)

This circuit suppresses short turn-on and off-pulses of incoming signals. This way the IGBTs are protected against spurious noise as they can occur due to bursts on the signal lines. Pulses shorter than 625ns are suppressed and all pulses longer than 750ns get through for 100% probability. Pulses with a length in-between 625ns and 750ns can be either suppressed or get through.

Pulse pattern – SPS

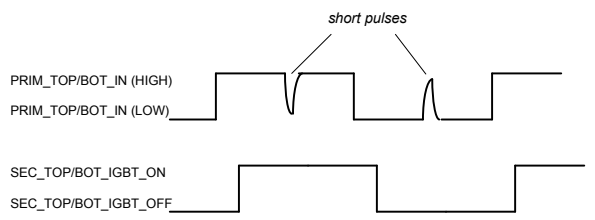

4.4. Dead Time generation (Interlock TOP / BOT) (DT)

The DT circuit prevents, that TOP and BOT IGBT of one half bridge are switched on at the same time (shoot through). The dead time is not added to a dead time given by the controller. Thus the total dead time is the maximum of "built in dead time" and "controller dead time". It is possible to control the driver with one switching signal and its inverted signal.

Please note:
The generated dead time is fixed at 2 µs and cannot be changed. Please contact your resonsible sales engineer for customization.

Pulse pattern – DT

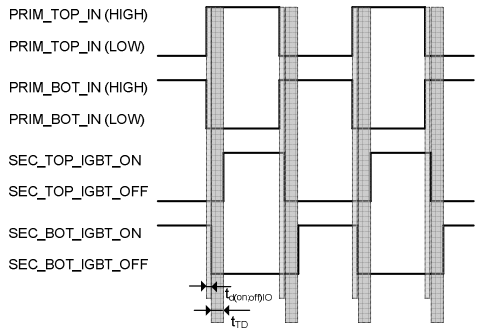

- The total propagation delay of the driver is the sum of interlock dead time (t_{TD}) and driver input output signal propagation delay ($t_{d(on;off)IO}$) as shown in the pulse pattern. Moreover the switching time of the IGBT chip has to be taken into account (not shown in the pulse pattern).
- In case both channel inputs (PRIM_TOP_IN and PRIM_BOT_IN) are at high level, the IGBTs will be turned off.
- If only one channel is switching, there will be no interlock dead time.

Please note:
No error message will be generated when overlap of switching signals occurs.

4.5. Dynamic Short Circuit Protection by VCEsat monitoring (DSCP)

The DSCP monitors the collector-emitter voltage V_{CE} of the IGBT during its on-state.

The reference voltage V_{CEref} may dynamically be adapted to the IGBTs switching behaviour. Immediately after turn-on of the IGBT, a higher value is effective than in steady state. V_{CEstat} is the steady-state value of V_{CEref} and is adjusted to the required maximum value for each IGBT by an external resistor R_{CE}. It may not exceed 10V. The time constant for the delay (exponential shape) of V_{CEref} may be controlled by an external capacitor $C_{CE.}$ It controls the blanking time t_{bl} which passes after turn-on of the IGBT before the V_{CEsat} monitoring is activated.

Reference Voltage (V_{CEref}) Characteristic

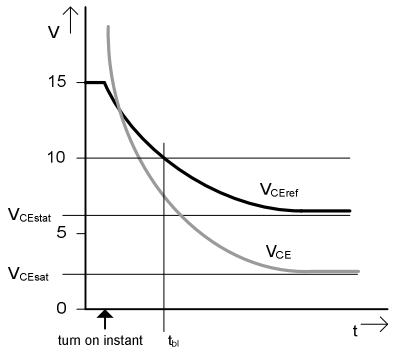

After t_{bl} has passed, the V_{CE} monitoring will be triggered as soon as $V_{CE} > V_{CEref}$ and will turn off the IGBT. The error memory will be set, and the output PRIM_nERROR_OUT changes to the HIGH state. Possible failure modes are shows in the following pictures.

Short circuit during operation	Turn on of IGBT too slow *	Short circuit during turn on
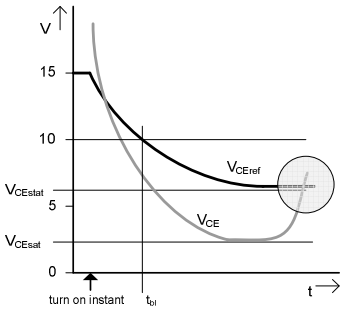	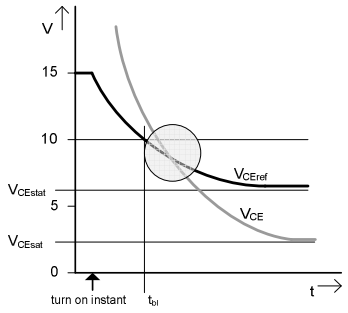	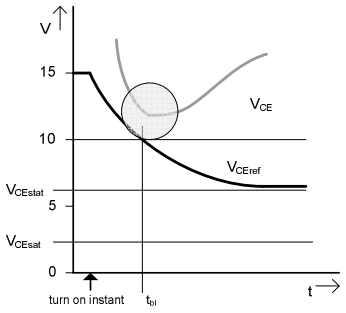

* or adjusted blanking time too short

Dimensioning of R_{CE} and C_{CE}

$$U_{Detect.1200V.Typ}(R_{Conf}) := 10.5\cdot V\cdot\frac{R_{Conf}}{10\cdot k\Omega + R_{Conf}}$$

$$V_1 := \frac{5.62}{6.62}\cdot 10.5\cdot V \qquad V_2 := \frac{10.5\cdot V}{5.62}$$

$$V_1 = 8.914\,V \qquad V_2 = 1.868\,V$$

$$U_{Detect.1700V.Typ}(R_{Conf}) := V_1\cdot\frac{R_{Conf}}{10\cdot k\Omega + R_{Conf}} - V_2$$

$$t_D := t_{Durchlauf.Komparator_1} \qquad t_1 := 5.62\cdot k\Omega\cdot 33\cdot pF$$

$$t_D = 440\times 10^{-9}\,s \qquad t_1 = 185.46\times 10^{-9}\,s$$

$$t_{Ausblend.1200VTyp}(R_{Conf}, C_{Conf}) := \left(\frac{R_{Conf}\cdot 10\cdot k\Omega}{R_{Conf} + 10\cdot k\Omega}\cdot C_{Conf} + t_1\right)\cdot\ln\left(\frac{15V - U_{Detect.1200V.Typ}(R_{Conf})}{10.5\cdot V - U_{Detect.1200V.Typ}(R_{Conf})}\right) + t_D$$

$$t_{Ausblend.1700VTyp}(R_{Conf}, C_{Conf}) := \left(\frac{R_{Conf}\cdot 10\cdot k\Omega}{R_{Conf} + 10\cdot k\Omega}\cdot C_{Conf} + t_1\right)\cdot\ln\left(\frac{15V - U_{Detect.1700V.Typ}(R_{Conf})}{10.5\cdot V - U_{Detect.1700V.Typ}(R_{Conf})}\right) + t_D$$

$$U_{Detect.1200V.Typ}(18.2\cdot k\Omega) = 6.777\,V$$

$$t_{Ausblend.1200VTyp}(18.2\cdot k\Omega, 337\cdot pF) = 2.31\times 10^{-6}\,s$$

If the DSCP function is not used, for example during the experimental phase, SEC_TOP_VCE_IN must be connected with SEC_TOP_GND for disabling SCP @ TOP side and SEC_BOT_VCE_IN must be connected with SEC_BOT_GND for disabling SCP @ BOT side.

The high voltage during IGBT off state is blocked by a high voltage diode.

Connection High Voltage Diode	Characteristics
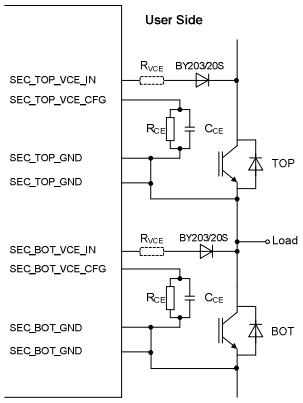	▪ Reverse blocking voltage of the diode shall be higher than the used IGBT. ▪ Reverse recovery time of the fast diode shall be lower than V_{CE} rising of the used IGBT. ▪ Forward voltage of the diode: 1,5V @ 2mA forward current (T_j=25°C). **A collector series resistance R_{VCE} (1kΩ / 0,4W) must be connected for 1700V IGBT operation.**

5. Electrical Characteristic

5.1. Driver Performance

The driver is designed for application with half bridges or single modules and a maximum gate charge per pulse < 100C (2,5µC on the driver). The charge necessary to switch the IGBT is mainly depending on the IGBT's chip size, the DC-link voltage and the gate voltage. This correlation is shown in module datasheets. It should, however, be considered that the driver is turned on at +15V and turned off at -8V. Therefore, the gate voltage will change by 22V during each switching procedure. The medium output current of the driver is determined by the switching frequency and the gate charge.

Calculation Switching Frequency	Maximum Switching Frequency @ different Gate Charges @ Tamb=25°C
$f_{max} = \frac{Iout_{AVmax}}{Q_{GE}}$ f_{max}: Maximum switching frequency * $Iout_{AVmax}$: Maximum output average current Q_{GE}: Gate charge of the driven IGBT * @ T_{amb}=25°C	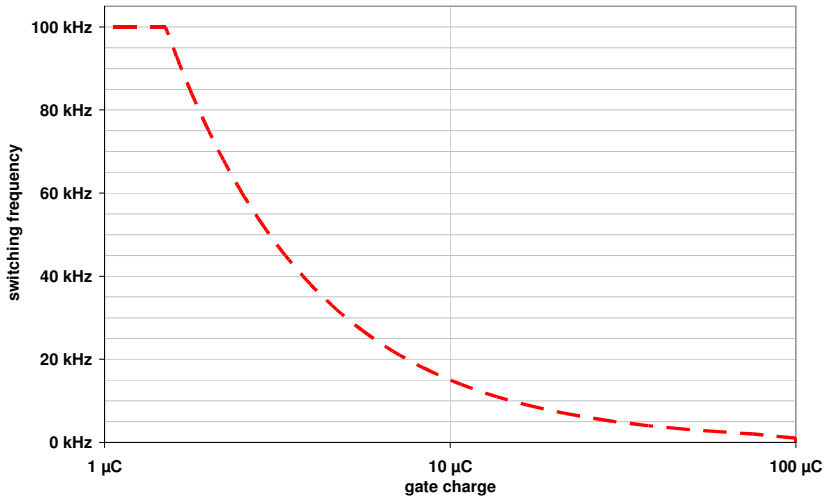

5.2. Insulation

Magnetic transformers are used for insulation between gate driver primary and secondary side. The transformer set consists of pulse transformers which are used bidirectional for turn-on and turn-off signals of the IGBT and the error feedback between secondary and primary side, and a DC/DC converter. This converter provides a potential separation (galvanic separation) and power supply for the two secondary (TOP and BOT) sides of the driver. Thus, external transformers for external power supply are not required.

Creepage and Clearance Distance	mm
Creepage Distance Primary to Secondary (Reinforced according to EN50178)	12,2
Clearance Distance Primary to Secondary (Reinforced according to EN50178)	8
Creepage Distance Secondary to Secondary (according to EN50178)	6,1
Clearance Distance Secondary to Secondary (according to EN50178)	4,1

Insulation parameters	Rating
Climatic Classification Pollution Degree (PD)	PD2
Maximum altitude (above sea level)	2000 meter above sea
Overvoltage category (according to EN50178)	OVC 3
Isolation resistance test, Prim-Sec	4000 VDC/AC, rms,2s
Rated insulation voltage (EN60664-1)	8 kV Kat. III

6. Environmental Conditions

Environmental Condition	Norm / Standard	Parameter
Operating temperature		-40.. +85 °C
Storage temperature		-40.. +85 °C
High humidity	DIN 45930 CECC 50012	85 °C, 85%
Flammability	VDV 150 DIN 5510 prEN 100	Heavy flammable materials only
	RoHS / WEEE / China RoHS	

EMC Condition	Norm / Standard	Parameter
ESD	DIN EN 61000-4-2 DIN EN 61800-3	6 kV contact discharge / 8 kV air discharge
Burst	DIN EN 61000-4-4 DIN EN 61800-3	≥ 2kV on adaptor board for signal lines
Immunity against external interference	DIN EN 61000-4-3 DIN EN 61800-3	≥ 30V/m 30MHz – 1000 MHz
Immunity against conducted interference	DIN EN 61000-4-3 DIN EN 61800-3	≥ 20V 150kHz – 80MHz

Conditions	Values (max.)
Vibration	Sinusoidal 20Hz … 500Hz, 5g, 2h per axis (x, y, z) Random 20Hz … 2000Hz, 5g, 2 h per axis (x, y, z)
Shock	6000 Shocks (6 axis; +-x, +-y, +-z, 1000 shocks per axis), 30g, 18ms - Connection between driver core and printed circuit board mechanical reinforced by using support posts.

 © by SEMIKRON

7. Marking

Every driver core is marked. The marking contains the following items.

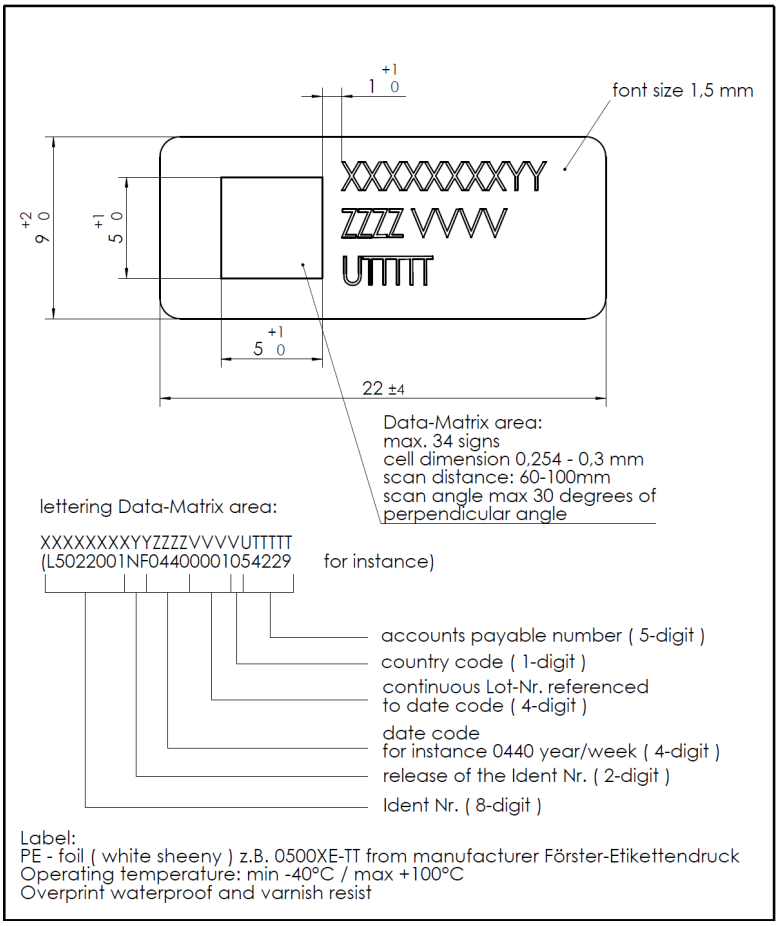

DISCLAIMER

SEMIKRON reserves the right to make changes without further notice herein to improve reliability, function or design. Information furnished in this document is believed to be accurate and reliable. However, no representation or warranty is given and no liability is assumed with respect to the accuracy or use of such information. SEMIKRON does not assume any liability arising out of the application or use of any product or circuit described herein. Furthermore, this technical information may not be considered as an assurance of component characteristics. No warranty or guarantee expressed or implied is made regarding delivery, performance or suitability. This document supersedes and replaces all information previously supplied and may be superseded by updates without further notice.

SEMIKRON products are not authorized for use in life support appliances and systems without the express written approval by SEMIKRON.