Features

- 16 bar
- G1/4 mechanical thread
- 100mV signal
- 4pin DIN connector
- Infinite resolution
- IP 65

RS PRO Motion Control Sensor

Pressure Transmitter

RS Stock No.: 0813808

RS Professionally Approved Products bring to you professional quality parts across all product categories. Our product range has been tested by engineers and provides a comparable quality to the leading brands without paying a premium price.

Product Description

- 0813808 series designed as compact, high robust, accurate pressure transmitter, up to 16 bar pressure measuring range.
- OPTC series pressure transmitters provides absolute pressure rating feedback for wide range of industrial applications.

Mechanical Specifications

CH2 Connector

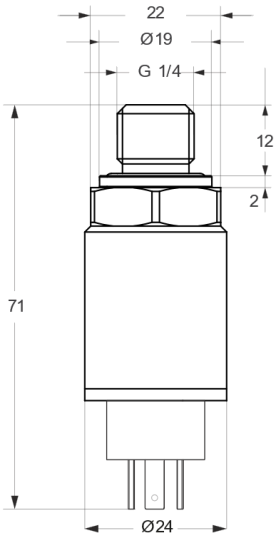

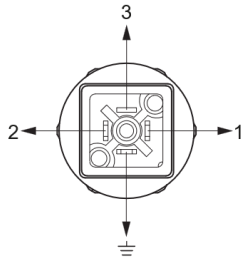

Voltage output	
1	0V
2	Vout
3	+Vs

Current output	
1	+Vs
2	Iout

Connectors / Cable

Connector (standard)

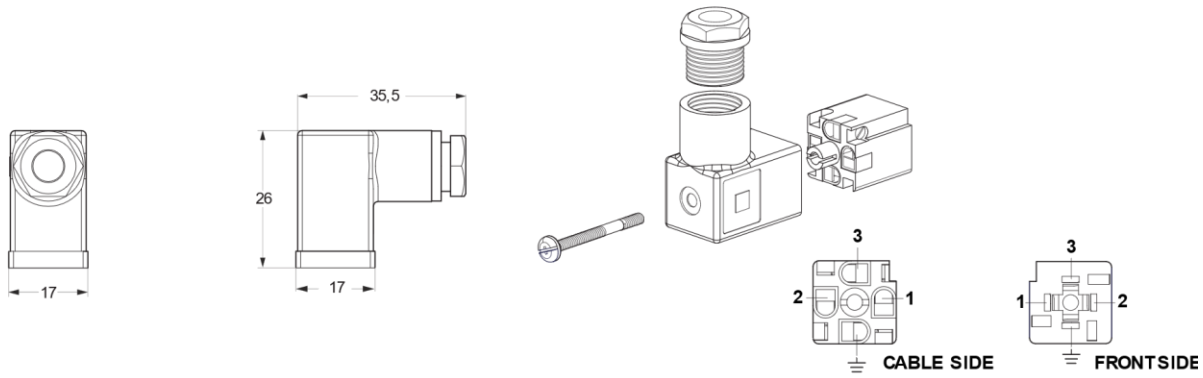

CN5AL: M12x1 Connector (optional)

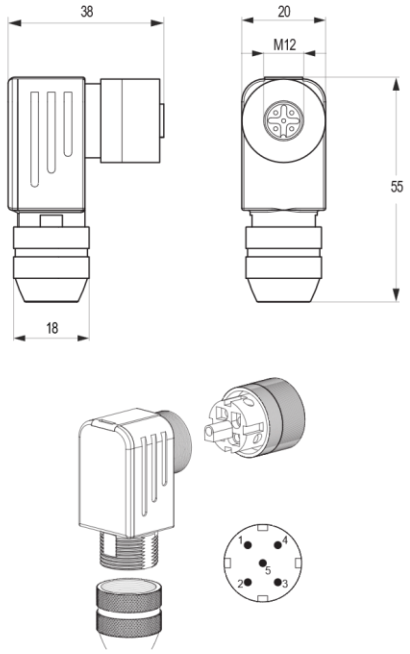

CN5AF: M12x1 Connector (optional)

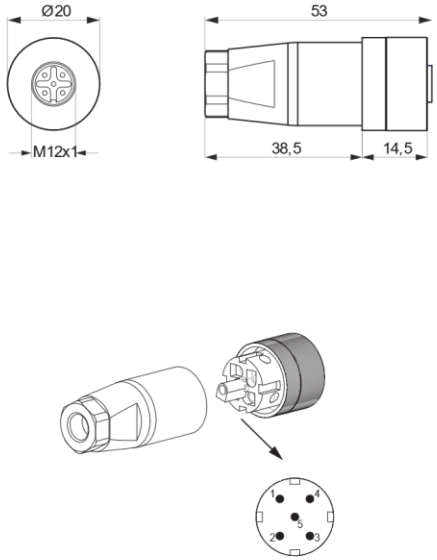

Mating Connectors Order Procedure

CN5AL: M12x1 Connector (optional)
CN5AF: M12x1 Connector (optional)

General Specifications

Range	16 bar
Output signal	0,1 – 1 0,1V
Mechanical Thread	G1/4
Accuracy - Linearity	Typ: ±0,25%FS (BFSL method) (1) Max.: ±1%FS /BFSL method) (2)
Resolution	Infinite
Update time	<1 ms
Overpressure range	2x pressure range
Burst pressure	3x pressure range
Power supply	8-24 VDC or 12-28 VDC
Power consumption	Max: 20 mA, <8 mA
Insulation resistance	>1500 Mohm @250 VDC
Case material	Stainless steel
Protection level	IP 65
Electrical connections	Reverse polarity
Storage temperature	-40°C ... +80°C

Approvals

Declarations	CE, UKCA, ROHS, REACH

Type Code

RS PRO Part Number	MPN	Mechanical thread	Pressure Range	Output	Connector / Cable
	OPTC 24 G1/4 B10 A I40 C2	G 1/4	10 bar	4..20mA	4pin DIN connector
	OPTC 24 G1/4 B400 A V5 C2	G 1/4	400 bar	0..5V dc	4pin DIN connector
	OPTC 24 G1/4 B10 A V5 C2	G 1/4	10 bar	0..5V dc	4pin DIN connector
	OPTC 24 G1/4 B16 A I40 C2	G 1/4	16 bar	4..20mA	4pin DIN connector
	OPTC 24 G1/4 B16 A V5 C2	G 1/4	16 bar	0..5V dc	4pin DIN connector
	OPTC 24 G1/4 B25 A I40 C2	G 1/4	25 bar	4..20mA	4pin DIN connector
	OPTC 24 G1/4 B100 A I40 C2	G 1/4	100 bar	4..20mA	4pin DIN connector
	OPTC 24 G1/4 B250 A I40 C2	G 1/4	250 bar	4..20mA	4pin DIN connector
	OPTC 24 G1/4 B40 A I40 C2	G 1/4	40 bar	4..20mA	4pin DIN connector
	OPTC 24 G1/4 B25 A V5 C2	G 1/4	25 bar	0..5V dc	4pin DIN connector
	OPTC 24 G1/4 B250 A V5 C2	G 1/4	250 bar	0..5V dc	4pin DIN connector
	OPTC 24 G1/4 B10 A 100mV C2	G 1/4	10 bar	100mV	4pin DIN connector
	OPTC 24 G1/4 B400 A I40 C2	G 1/4	400 bar	4..20mA	4pin DIN connector
	OPTC 24 G1/4 B10 A I40 CN5A	G 1/4	10 bar	4..20mA	5pin M12 Round Connector
	OPTC 24 G1/4 B100 A V5 CN5A	G 1/4	100 bar	0..5V dc	5pin M12 Round Connector
	OPTC 24 G1/4 B10 A V5 CN5A	G 1/4	10 bar	0..5V dc	5pin M12 Round Connector
	OPTC 24 G1/4 B100 A V5 C2	G 1/4	100 bar	0..5V dc	4pin DIN connector
	OPTC 24 G1/4 B250 A 100mV C12	G 1/4	250 bar	100mV	12 pin connector
	OPTC 24 G1/4 B40 A V5 C2	G 1/4	40 bar	0..5V dc	4pin DIN connector

RS PRO Part Number	MPN	Mechanical thread	Pressure Range	Output	Connector / Cable
	OPTC 24 G1/4 B400 A I40 C2	G 1/4	400 bar	4..20mA	4pin DIN connector
	OPTC 24 G1/4 B400 A V5 C2	G 1/4	400 bar	0..5V dc	4pin DIN connector
	OPTC 24 G1/4 B16 A V5 C2	G 1/4	16 bar	0..5V dc	4pin DIN connector
	OPTC 24 G1/4 B40 A V5 C2	G 1/4	40 bar	0..5V dc	4pin DIN connector
	OPTC 24 G1/4 B25 A 100mV C2	G 1/4	25 bar	100mV	4pin DIN connector
	OPTC 24 G1/4 B100 A 100mV C2	G 1/4	100 bar	100mV	4pin DIN connector
	OPTC 24 G1/4 B250 A I40 C2	G 1/4	250 bar	4..20mA	4pin DIN connector
	OPTC 24 G1/4 B400 A 100mV C2	G 1/4	400 bar	100mV	4pin DIN connector
	OPTC 24 G1/4 B16 A I40 CN4A	G 1/4	16 bar	4..20mA	4pin M12 Round Connector
	OPTC 24 G1/4 B25 A I40 CN4A	G 1/4	25 bar	4..20mA	4pin M12 Round Connector
	OPTC 24 G1/4 B250 A V5 CN4A	G 1/4	250 bar	0..5V dc	4pin M12 Round Connector
	OPTC 24 G1/4 B40 A I40 CN4A	G 1/4	40 bar	4..20mA	4pin M12 Round Connector
	OPTC 24 G1/4 B25 A V5 CN4A	G 1/4	25 bar	0..5V dc	4pin M12 Round Connector
	0813803	G 1/4	40 bar	100mV	4pin DIN connector
	0813804	G 1/4	100 bar	4..20mA	4pin M12 Round Connector
	0813805	G 1/4	6 bar	4..20mA	4pin M12 Round Connector
	0813807	G 1/4	6 bar	0..5V dc	4pin M12 Round Connector
	0813808	G 1/4	16 bar	100mV	4pin DIN connector
	0813809	G 1/4	6 bar	100mV	4pin DIN connector
	0813810	G 1/4	6 bar	4..20mA	4pin DIN connector
	0813811	G 1/4	6 bar	0..5V dc	4pin DIN connector