REVISIONS			
REV.	ECN No	DESCRIPTION	DATE
1		RELEASED TO PRODUCTION. S.SAFARALIEV	10/12/2021
2	1618	THICKNESS WAS 2.0. S.SAFARALIEV	17/06/2022

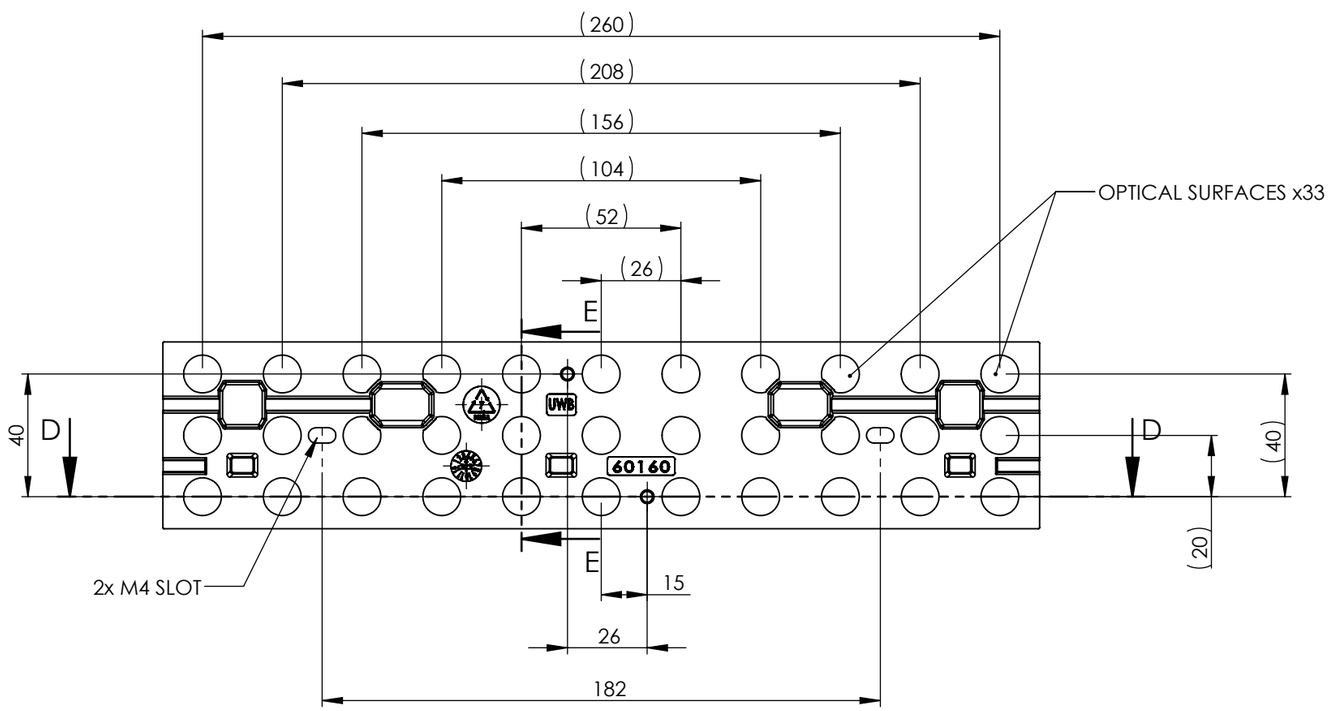

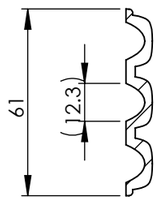

SECTION E-E

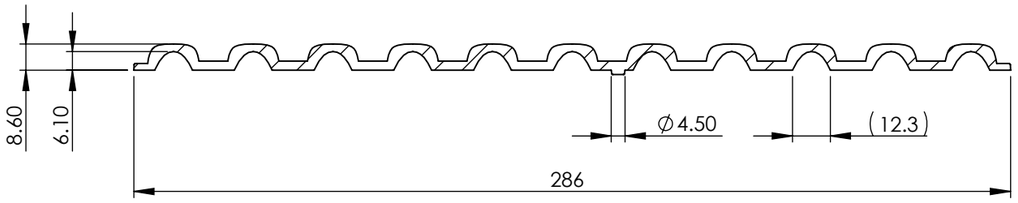

SECTION D-D

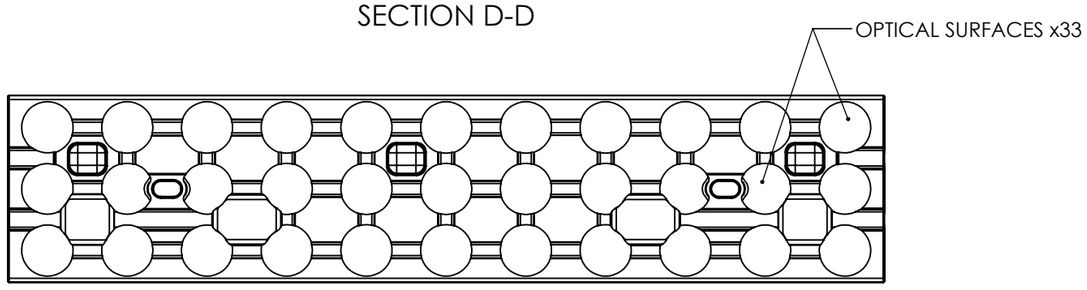

NOTES:

1 - MATERIALS: PMMA

2 - FINISH: ALL OPTICAL SURFACES ARE OPTICALLY POLISHED

3 - CRITICAL TO QUALITY DIMENSIONS (X.XX) ARE FOR INSPECTION
THEORETICALLY EXACT DIMENSIONS [X.XX] TO ISO 1101
AUXILIARY DIMENSIONS (X.XX) ARE FOR INFORMATION ONLY

CUSTOMER DRAWING

SHEET 2 OF 2

carclo Optics
Unit 6-7 Faraday Road
Rabans Lane Industrial Area,
Aylesbury, HP19 8RY, UK.
Tel: +44(0) 01753 575 011
sales@carclo-optics.com www.carclo-optics.com

Title	33UP UWB, FORTIMO, NON OVERLAP/EDGE LIP, PMMA				
Drawn by	S.SAFARALIEV	Customer	CARCLO	Scale	1:2
THIRD ANGLE PROJECTION	GENERAL TOLERANCES UNLESS OTHERWISE STATED DIN16742: TG6	CARCLO Optics	DIMENSION IN mm	Format Size	A3
		CONFIDENTIAL: UNAUTHORISED COPYING, DISCUSSION & DISTRIBUTION PROHIBITED	CAD File	60160 Rev2 33Up UWB	
			Part N°	60160	Project N° P00891