Order-No.	Shell Size / for No. of Contacts	B ±0.1	C ±0.3	G ±0.3	K ±0.3	L ±0.3
FWAB1	1 / 9	25	40.3	31.4	18	32.6
FWAB2	2 / 15	33.3	48.5	39.7	26.3	41.3
FWAB3	3 / 25	47	62.3	53.5	40	55.1

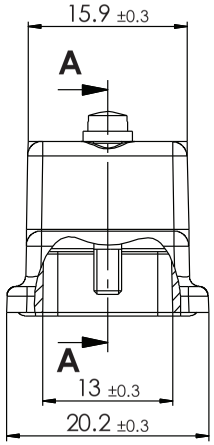

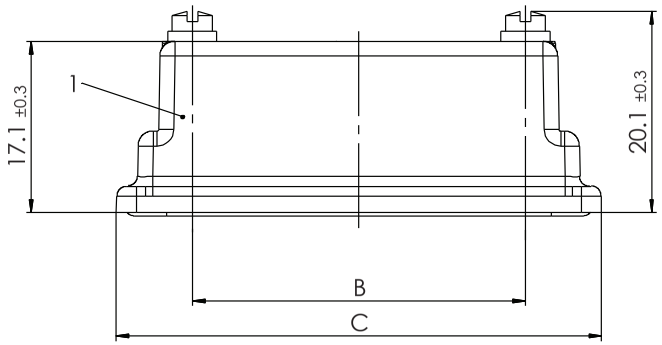

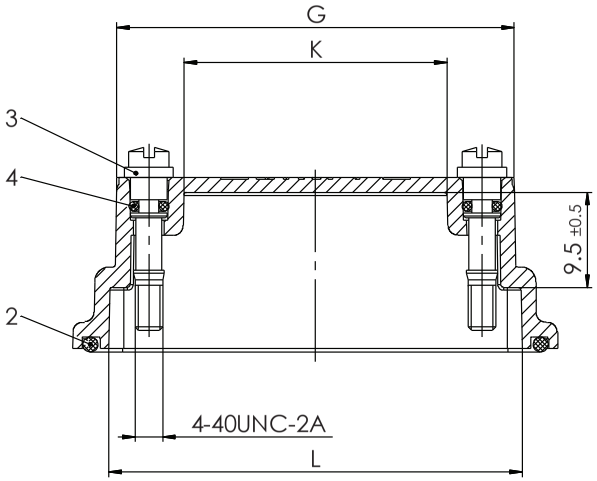

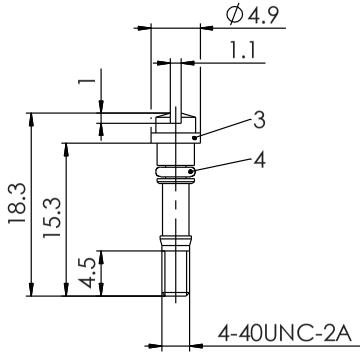

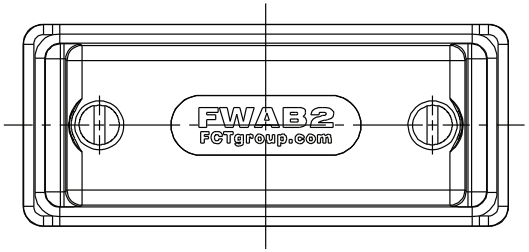

RoHS compliant

No.	St.	Part	Type Description/Material	Surface plating/Colour/Class
4	2	FVSW - O-ring seal	Elastomer	red
3	2	Locking screw	FVSW1/5-K1449 4-40 / Brass	nickel plated
2	1	O-ring seal	Elastomer	red
1	1	Plastic dust cup	FWAB1-3 / PC+ABS	black

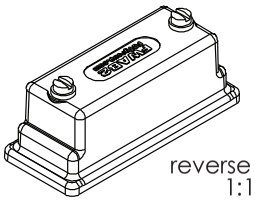

reverse side
1:1

Packing unit on supplement AM0409

max. torque are 40 Ncm

Protection standard IP67, 100% checked according to DIN EN 60529

			Measurement without tolerance acc. to ISO 2768-m	SCALE 2:1	TITLE Plastic dust cup
			NAME / DATE		
			DRAWN tschneider01 26-07-2016		
			CHECKED BWittek 27-07-2016		
			FCT a molex company	DWG.NO. FWAB1-3-4488	REV. 1
1					
REV.	DATE	CH.-NO.	ORIGINAL: DIN A3-DRAWING AS A FILE	REPLACEMENT FOR:	PAGES 1

COMMENT:
ALL RIGHTS ARE RESERVED BY US FOR THIS DRAWING, WITHOUT OUR PRIOR CONSENT.
IT MAY NEITHER BE DUBLICATED NOR MADE AVAILABLE TO A THIRD PARTY,
AND IT ALSO MAY NOT BE IMPROPERLY USED BY TE RECEIVER, OR A THIRD PARTY.