Brand of NTN corporation

Technical data

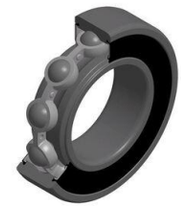

62302EE

Single row deep groove ball bearings

Deep groove ball bearing, radial contact, pressed steel cage, contact seals on both sides

VISUAL (S)

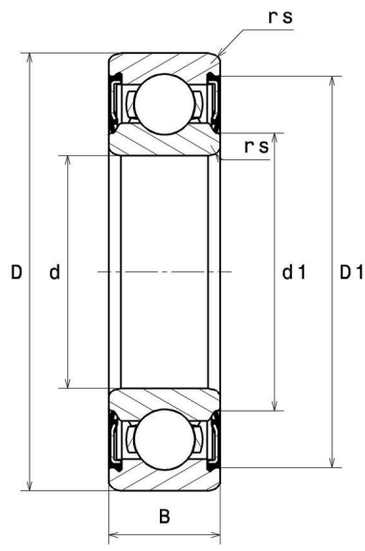

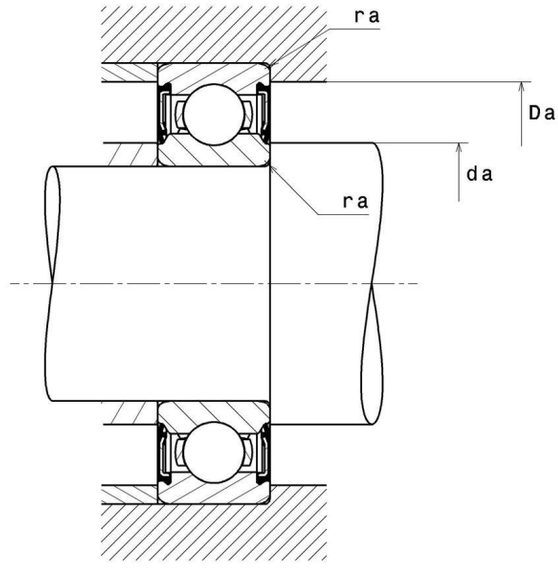

NTN Europe
1 rue des Usines · BP 2017 · 74010 Annecy Cedex · France · Tel. +33 (0)4 50 65 30 00
S.A. au capital de 322 639 919 € · RCS ANNECY B 325 821 072 · Id. Fiscale : FR 48 325 821 072
SIRET 325 821 072 00015 · Code APE 2815 Z · Code NACE 28.15

62302EE
Single row deep groove ball bearings

PRODUCT DEFINITION	
Brand	SNR
d - Internal diameter	15 mm
D - External diameter	42 mm
B - Bearing/Inner ring width	17 mm
d1 - External diameter inner ring	23,2 mm
D1 - Inner diameter outer ring	36,1 mm
rs - Min fillet radius	1 mm
Radial clearance class	CN
Mass	0,108 kg

PRODUCT PERFORMANCE	
C - Dynamic load	11900000 mN
C0 - Static load	5300000 mN
Cu - Fatigue limit load	240000 mN
f0 - Coefficient	12.1
N lim - Mechanical Limit Speed	72000 °/s
Tmin - Min operating temperature	243,15 °K
Tmax - Max operating temperature	393,15 °K

BEARING FREQUENCIES	
BPFO - Over rolling frequency on outer ring (60 rpm)	2.525 Hz
BPFI - Over rolling frequency on inner (60 rpm)	4.475 Hz
BSF - Over rolling frequency on rolling element (60 rpm)	3.312 Hz
BRF - Rotational frequency – rolling element (60 rpm)	1.656 Hz
FTF - Rotational frequency - cage (60 rpm)	0.361 Hz

62302EE
Single row deep groove ball bearings

ABUTMENT	
da min - Min shoulder diameter IR	20 mm
da max - Max shoulder diameter IR	17,9 mm
Da max - Max shoulder diameter OR	37 mm
ra max - Max shaft & housing fillet radius	1 mm

INDUSTRY CALCUL FACTORS

Equivalent dynamic radial load

P = X.Fr + Y.Fa

$\frac{f_0 F_a}{C_0}$	e	Fa / Fr ≤ e		Fa / Fr > e	
		X	Y	X	Y
0.172	0.19	1	0	0.56	2.3
0.345	0.22				1.99
0.689	0.26				1.71
1.03	0.28				1.55
1.38	0.3				1.45
2.07	0.34				1.31
3.45	0.38				1.15
5.17	0.42				1.04
6.89	0.44				1

Equivalent static radial load

Po = Xo.Fr + Yo.Fa

X_0	Y_0
0.6	0.5

For single or DT bearing arrangement :

If Po <Fr, then use Po = Fr